Service Manual

Abbreviations
and
IC Informations

Panasonic
Broadcast Systems

ICs INFORMATION

CONTENTS

PART NO.	REF. NO.	REF. PAGE
74AC00SJ	7400	5
74AC04SJ	7404	5
74AC08SJ	7408	5
74AC157SJ	74157	7
74AC74SJ	7474	11
74F00SJ	7400	5
74F112SJ	74112	6
74F11SJ	7411	5
74F521SJ	74521 (74688)	11
74F574SJ	74574	10
74F821SCX		
74F86SJ	7486	11
AD1862NJ		
AD633J		
AD707K	AD707KR	11
AD707KR	AD707KR	11
AD7538JR		
AD7868A		
AD9300KP	AD9300	11
AD96687BR		
ADG211AK		
AK5326	AK5326	11
AM26LS31M	AM26LS31PC	11
AM26LS32M	AN26LS32PC	12
AM27C128200D	AM27C128	12
AN3891FBP		
AN6558	AN6558/S	12
AN6558S	AN6558/S	12
AN6609NS		
AN6873N	AN6873N	12
AN7805	AN7805	12
AN7805F	AN7805	12
AN7815		
AN78N05	AN78N00	13
AN78N09	AN78N00	13
AN78N12	AN78N00	13
AN7905F		
AN79N05	AN79N00	13
AN79N12	AN79N00	13
AN91A12S	AN91A12S	14
BA301	BA301	13
BA618		
BA6238AU2M	BA6238	15
BA6256		
CG21503-131		
CG21503-132		
CXA1389AQ		
CXD1175AM	CXD1175AM	15
CXD2105AQ	CXD2105AQ	14
CXK58102J3T		

PART NO.	REF. NO.	REF. PAGE
D65658GM068		
DAC10-GSR	DAC10-GX	15
DG508ACWE	DG508AC	16
DS1225Y-200		
DS9637ACN	DS9637A	15
EL2044CS		
EL2044CS-T1		
EL2082CS		
EP610SC-30	EP610	16
EPM5032DC-20	EPM5032	16
EPS464JC-25		
EXBLD8103G		
HD64180ZP8	HD64180	17
HD6435328F10		
HM628128LT7	HM628128LFP7	18
L7A0344		
L7A0348		
L7A0541	L7A0541	18
L7A0543		
L7A0649		
L7A0650		
L7A0651	L7A0651	18
L7A0674	L7A0674	19
L7A0754		
L7A0755		
L7A0756		
L7A0782	L7A0782	20
L7A0837		
L7A0855		
L7A1041		
LM318PS-R	LM318N	20
LM337T	LM337	19
M5206P	M5206P	20
M5256BVP-70L	M5256BFP-70	21
M5257AJ-35	M5257J-35T4	21
M5278J-35		
MB10HL107PFF	MB10HL107PFF	22
MB10HL116PFF	MB10HL116PFF	22
MB121M246	MB121M246	22
MB40778PF-TF	MB40778PF	22
MB620859PFV	MB620859PFV	23
MB621926		
MB621926PFV		
MB813AZ	MB813AZ	24
MB81C4256A80		
MB81C78A35PF	MB81C78A35PF	24
MB81C79A35PF	MB81C79A35PF	24
MB8289-25PF	MB8289-25PF	25
MB8421-90LPF	MB8421-90LPF	25
MB88346APF	MB88346	26

PART NO.	REF. NO.	REF. PAGE
MB88346BPF	MB88346	26
MB89363BPF	MB89363	27
MC10125L	HD10125	17
MC10H102	MC10H102	26
MC10H116M	MC10H116	26
MC10H124M	MC10124	27
MC10H125M		
MC10H176	MC10H176	28
MC14011BF	4011	1
MC14013BF	4013	1
MC14015BF	4015	1
MC14021BF	4021	2
MC14024BF	4024	2
MC14050BF	4050	2
MC14052BF	4052	3
MC14053BF	4053	3
MC14081BF	4081	4
MC14094BF	4094	4
MC14516BF	4516	4
MC14538BF	4538	4
MC1488M	1488	1
MC1489M	1489	1
MC1495M	MC1495L	28
MC34051M	MC34051	28
MC4044M	MC4044	28
MC68332CFC		
MC74HC00AF	7400	5
MC74HC02AF	7402	5
MC74HC04AF	7404	5
MC74HC04AN	7404	5
MC74HC08AF	7408	5
MC74HC10F	7410	5
MC74HC11F	7411	5
MC74HC126AF	74126	6
MC74HC138AF	74138	6
MC74HC139AF	74139	6
MC74HC151F	74151	7
MC74HC153F	74153	7
MC74HC157AF	74157	7
MC74HC161F	74161	7
MC74HC163AF	74163	7
MC74HC164F	74164	7
MC74HC165F	74165	8
MC74HC175F	74175	8
MC74HC244AF	74244	9
MC74HC245AF	74245	9
MC74HC273AF	74273	9
MC74HC27F	7427	9
MC74HC32AF	7432	10
MC74HC4002F	4002	1
MC74HC4040F	4040	2
MC74HC4050F	4050	2
MC74HC4051F	4051	3
MC74HC4052F	4052	3
MC74HC4053F	4053	3

PART NO.	REF. NO.	REF. PAGE
MC74HC541F	74541	10
MC74HC573AF	74573	10
MC74HC574AF	74574	10
MC74HC595AF	74595	10
MC74HC74AF	7474	11
MC74HC86F	7486	11
MC74HCT244AF	74244	9
MC74HCU04F	7404	5
MCM514256AP8		
MK1110		
MM74HC221AM	74221	8
MM74HC221AMX	74221	8
MN4013BS	4013	1
MN4464S-08LL		
MN51040VPI	MN51040	28
MN53040VPQ	MN53040VPQ	29
MN56200VPV		
MN6631A	MN6631	29
MN8305S	MN8305S	29
NE521D	NE521	30
NJM082BM	NJM082BM	30
NJM084M	NJM084	30
NJM1496M	NJM1496	30
NJM2043MD		
NJM2060M		
NJM2068MD	NJM2068MD	31
NJM2901M	NJM2901	31
NJM2903M	NJM2903M	31
NJM2904D	NJM2904M	31
NJM2904M	NJM2904M	31
NJM319M	NJM319M	31
NJM360M	NJM360M	31
NJM4558M	NJM4558	31
NJM4560MD	NJM4560MD	32
NJM4580ED	NJM4580ED	32
NJM78L05UA	AN78L00	13
NJM78L08UA	AN78L00	13
NJM78L09UA	AN78L00	13
NJM78L12UA	AN78L00	13
NJM79L05UA	AN79L00	13
NJM79L09UA	AN79L00	13
NJM79L12UA	AN79L00	13
PU4124	PU4124	32
S-80230AG	S80230AG	32
S-81250HG	S81250HG	32
SLA6080F5B		
SLA7220F5A		
SLA909SF1G		
SN74ALS245A	74245	9
SN74ALS541S	74541	10
SN74ALS541SR	74541	10
SN74AS04NS	7404	5
SN74AS109NS	74109	5
SN74AS10NS	7410	5
SN74AS240NS	74240	9

ICs INFORMATION

CONTENTS

PART NO.	REF. NO.	REF. PAGE
74AC00SJ	7400	5
74AC04SJ	7404	5
74AC08SJ	7408	5
74AC157SJ	74157	7
74AC74SJ	7474	11
74F00SJ	7400	5
74F112SJ	74112	6
74F11SJ	7411	5
74F521SJ	74521 (74688)	11
74F574SJ	74574	10
74F821SCX		
74F86SJ	7486	11
AD1862NJ		
AD633J		
AD707K	AD707KR	11
AD707KR	AD707KR	11
AD7538JR		
AD7868A		
AD9300KP	AD9300	11
AD96687BR		
ADG211AK		
AK5326	AK5326	11
AM26LS31M	AM26LS31PC	11
AM26LS32M	AN26LS32PC	12
AM27C128200D	AM27C128	12
AN3891FBP		
AN6558	AN6558/S	12
AN6558S	AN6558/S	12
AN6609NS		
AN6873N	AN6873N	12
AN7805	AN7805	12
AN7805F	AN7805	12
AN7815		
AN78N05	AN78N00	13
AN78N09	AN78N00	13
AN78N12	AN78N00	13
AN7905F		
AN79N05	AN79N00	13
AN79N12	AN79N00	13
AN91A12S	AN91A12S	14
BA301	BA301	13
BA618		
BA6238AU2M	BA6238	15
BA6256		
CG21503-131		
CG21503-132		
CXA1389AQ		
CXD1175AM	CXD1175AM	15
CXD2105AQ	CXD2105AQ	14
CXK58102J3T		

PART NO.	REF. NO.	REF. PAGE
D65658GM068		
DAC10-GSR	DAC10-GX	15
DG508ACWE	DG508AC	16
DS1225Y-200		
DS9637ACN	DS9637A	15
EL2044CS		
EL2044CS-T1		
EL2082CS		
EP610SC-30	EP610	16
EPM5032DC-20	EPM5032	16
EPS464JC-25		
EXBLD8103G		
HD64180ZP8	HD64180	17
HD6435328F10		
HM628128LT7	HM628128LFP7	18
L7A0344		
L7A0348		
L7A0541	L7A0541	18
L7A0543		
L7A0649		
L7A0650		
L7A0651	L7A0651	18
L7A0674	L7A0674	19
L7A0754		
L7A0755		
L7A0756		
L7A0782	L7A0782	20
L7A0837		
L7A0855		
L7A1041		
LM318PS-R	LM318N	20
LM337T	LM337	19
M5206P	M5206P	20
M5256BVP-70L	M5256BFP-70	21
M5257AJ-35	M5257J-35T4	21
M5278J-35		
MB10HL107PFF	MB10HL107PFF	22
MB10HL116PFF	MB10HL116PFF	22
MB121M246	MB121M246	22
MB40778PF-TF	MB40778PF	22
MB620859PFV	MB620859PFV	23
MB621926		
MB621926PFV		
MB813AZ	MB813AZ	24
MB81C4256A80		
MB81C78A35PF	MB81C78A35PF	24
MB81C79A35PF	MB81C79A35PF	24
MB8289-25PF	MB8289-25PF	25
MB8421-90LPF	MB8421-90LPF	25
MB88346APF	MB88346	26

PART NO.	REF. NO.	REF. PAGE
MB88346BPF	MB88346	26
MB89363BPF	MB89363	27
MC10125L	HD10125	17
MC10H102	MC10H102	26
MC10H116M	MC10H116	26
MC10H124M	MC10124	27
MC10H125M		
MC10H176	MC10H176	28
MC14011BF	4011	1
MC14013BF	4013	1
MC14015BF	4015	1
MC14021BF	4021	2
MC14024BF	4024	2
MC14050BF	4050	2
MC14052BF	4052	3
MC14053BF	4053	3
MC14081BF	4081	4
MC14094BF	4094	4
MC14516BF	4516	4
MC14538BF	4538	4
MC1488M	1488	1
MC1489M	1489	1
MC1495M	MC1495L	28
MC34051M	MC34051	28
MC4044M	MC4044	28
MC68332CFC		
MC74HC00AF	7400	5
MC74HC02AF	7402	5
MC74HC04AF	7404	5
MC74HC04AN	7404	5
MC74HC08AF	7408	5
MC74HC10F	7410	5
MC74HC11F	7411	5
MC74HC126AF	74126	6
MC74HC138AF	74138	6
MC74HC139AF	74139	6
MC74HC151F	74151	7
MC74HC153F	74153	7
MC74HC157AF	74157	7
MC74HC161F	74161	7
MC74HC163AF	74163	7
MC74HC164F	74164	7
MC74HC165F	74165	8
MC74HC175F	74175	8
MC74HC244AF	74244	9
MC74HC245AF	74245	9
MC74HC273AF	74273	9
MC74HC27F	7427	9
MC74HC32AF	7432	10
MC74HC4002F	4002	1
MC74HC4040F	4040	2
MC74HC4050F	4050	2
MC74HC4051F	4051	3
MC74HC4052F	4052	3
MC74HC4053F	4053	3

PART NO.	REF. NO.	REF. PAGE
MC74HC541F	74541	10
MC74HC573AF	74573	10
MC74HC574AF	74574	10
MC74HC595AF	74595	10
MC74HC74AF	7474	11
MC74HC86F	7486	11
MC74HCT244AF	74244	9
MC74HCU04F	7404	5
MCM514256AP8		
MK1110		
MM74HC221AM	74221	8
MM74HC221AMX	74221	8
MN4013BS	4013	1
MN4464S-08LL		
MN51040VPI	MN51040	28
MN53040VPQ	MN53040VPQ	29
MN56200VPV		
MN6631A	MN6631	29
MN8305S	MN8305S	29
NE521D	NE521	30
NJM082BM	NJM082BM	30
NJM084M	NJM084	30
NJM1496M	NJM1496	30
NJM2043MD		
NJM2060M		
NJM2068MD	NJM2068MD	31
NJM2901M	NJM2901	31
NJM2903M	NJM2903M	31
NJM2904D	NJM2904M	31
NJM2904M	NJM2904M	31
NJM319M	NJM319M	31
NJM360M	NJM360M	31
NJM4558M	NJM4558	31
NJM4560MD	NJM4560MD	32
NJM4580ED	NJM4580ED	32
NJM78L05UA	AN78L00	13
NJM78L08UA	AN78L00	13
NJM78L09UA	AN78L00	13
NJM78L12UA	AN78L00	13
NJM79L05UA	AN79L00	13
NJM79L09UA	AN79L00	13
NJM79L12UA	AN79L00	13
PU4124	PU4124	32
S-80230AG	S80230AG	32
S-81250HG	S81250HG	32
SLA6080F5B		
SLA7220F5A		
SLA909SF1G		
SN74ALS245A	74245	9
SN74ALS541S	74541	10
SN74ALS541SR	74541	10
SN74AS04NS	7404	5
SN74AS109NS	74109	5
SN74AS10NS	7410	5
SN74AS240NS	74240	9

PART NO.	REF. NO.	REF. PAGE
SN74AS244NS	74244	9
SN74AS244NSR	74244	9
SN74AS253NS	74253	9
SN74AS257NS	74257	9
SN74AS74NS	7474	11
SN74AS74NSR	7474	11
SN74HC238NS	74238	8
SN74HCT541N	74541	10
SN74HCT541NR	74541	10
SN74LS05NS	7405	5
SN74LS123NS	74123	6
SN74LS157NSR	74157	7
SN74LS221NS	74221	8
SN74LS244NS	74244	9
SN74LS244NSR	74244	9
SN74LS245NSR	74245	9
SN74LS541NS	74541	10
SN74LS541NSR	74541	10
SN74LS682NS	74682	11
SN74S1051NS	SN74S1051NS	33
SN74S1051NSR	SN74S1051NS	33
SN74S1053NS		
SN75158P	SN75158	32
STA311A		
STA322A		
STV1601A		
STV1602A	STV1602A	33
TC4S30F	TC4S30F	34
TC4S66F	TC4S66F	34
TC4S69F		
TC4S81F		
TC7SU04F	TC7S04F	34
TC7WU04F	TC7S04F	34
TDC1112R3C2		
TE7750		
TL082CPS	TL082	34
TL084CNS	TL084	34
TL317LP		
TL431CLP	TL431	34
TL495CN		
TL7705CPSB	TL7705	34
TMC2242R2C1		
TMP82C55AF2	TMP82C55AF2	34
TMP82C79F2	TMP82C79F2	35
TMPZ84C43AF8	TMPZ84C43AF6	35
UPC1663G	UPC1663	35
UPC1676G		
UPC319G2	UPC319	35
UPC337H		
UPC339G2	UPC339	35
UPC4074G2	UPC4074	36
UPC4082G2	UPC4082	36
UPC451G	UPC451	36
UPC4556G2		
UPC4558G2	UPC4558	36

PART NO.	REF. NO.	REF. PAGE
UPC4741G2	UPC4741	36
UPC494C	UPC494G	36
UPC5102GS030		
UPC624C	UPC624C	36
UPD4066BG	4066	4
UPD42101G-3	UPD42101G	37
UPD42102G-3	UPD42102G	37
UPD42280GU3E		
UPD5201G	UPD5201C	37
UPD6456T611Y		
UPD65240G057	UPD65240G057	38
UPD65664G039	UPD65664G039	39
UPD71054GB	UPD71054G	40
UPD71055GB	UPD71055G	40
UPD78C10GF	UPD78C10G	41
VCR0354	VCR0354	41
VSC3KI007FL	VSC3KI007FL	42
VSI1322		
VSI1324		
VSI1325		
VSI1327		
VSL0081		
YSF210BM		

NOTE: The following ICs which are not described on the REF. PAGE, are not contained the IC Block drawing in this issue.

1488
(QUAD LINE (RS232C) DRIVER)

(TOP VIEW)

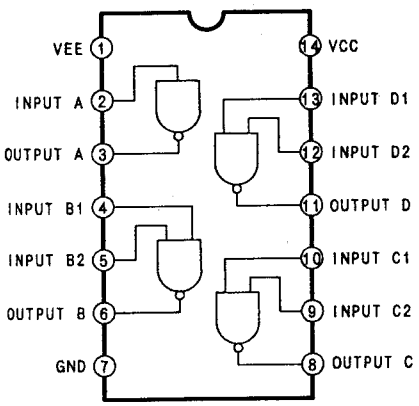

1489
(QUAD LINE (RS232C) RECEIVER)

(TOP VIEW)

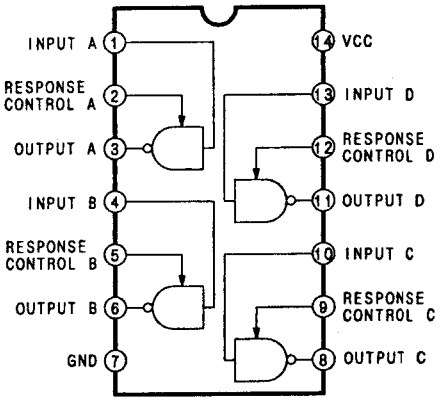

4002
DUAL 4-INPUT NOR GATE

(TOP VIEW)

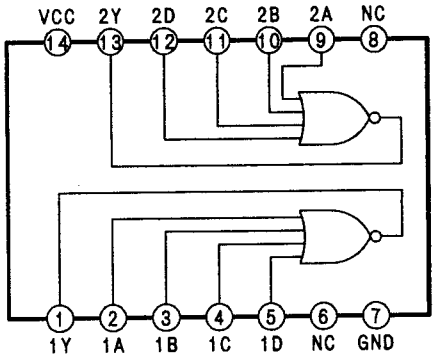

4013
(DUAL D-TYPE FLIP-FLOP)

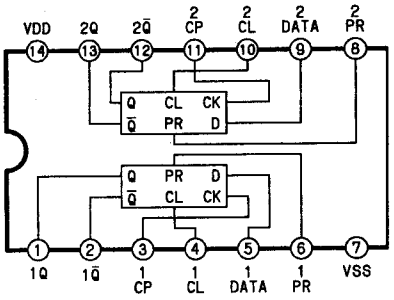

TRUTH TABLE

INPUTS				OUTPUTS	
CLOCK†	DATA	RESET	SET	Q	Q̄
↑	0	0	0	0	1
↑	1	0	0	1	0
↓	×	0	0	Q	Q̄
×	×	1	0	0	1
×	×	0	1	1	0
×	×	1	1	1	1

NO CHANGE

X=DON'T CARE
†=LEVEL CHANGE

4011
(QUAD 2-INPUT NAND GATE)

(TOP VIEW)

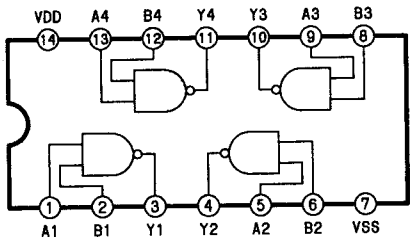

TRUTH TABLE

CL▲	D	R	Q1	QN
↑	0	0	0	QN-1
↑	1	0	1	QN-1
↓	×	0	Q1	QN (NO CHANGE)
×	×	1	0	0

▲ LEVEL CHANGE
× DON'T CARE CASE

4015
(DUAL 4-STAGE SHIFT REGISTER)

LOGIC DIAGRAM

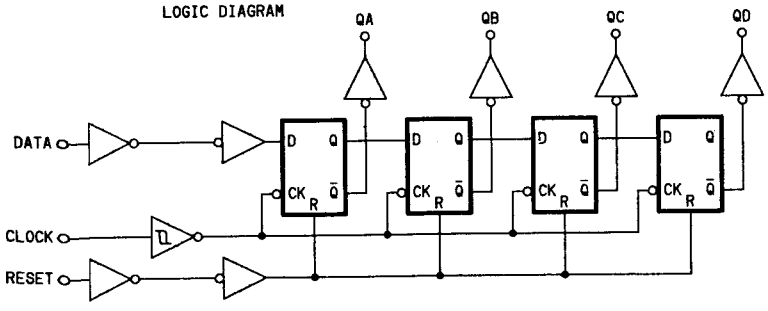

(TOP VIEW)

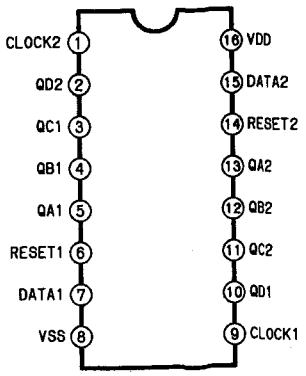

4021
(8-STAGE STATIC SHIFT REGISTER)

(TOP VIEW)

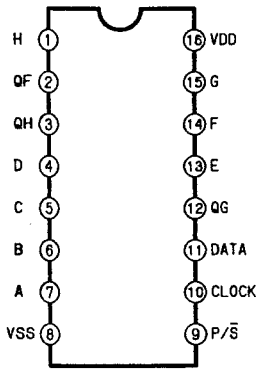

BLOCK DIAGRAM

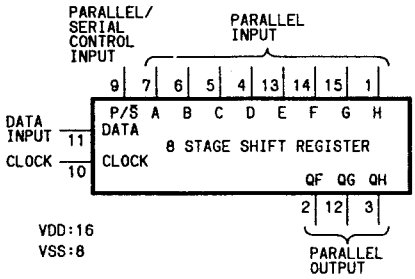

TRUTH TABLE

CL ▲	SERIAL INPUT	PARALLEL/ SERIAL CONTROL	PL-1	PL-N	Q1 (INTERNAL)	QN
×	×	1	0	0	0	0
×	×	1	0	1	0	1
×	×	1	1	0	1	0
×	×	1	1	1	1	1
⌒	0	0	×	×	0	QN-1
⌒	1	0	×	×	1	QN-1
⌓	×	0	×	×	Q1	QN

▲=LEVEL CHANGE ×=DON'T CARE CASE

4024
(7-STAGE BINARY RIPPLE COUNTER)

(TOP VIEW)

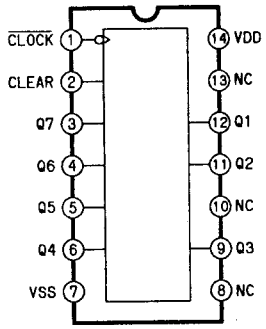

4050
(HEX.BUFFER/CONVERTER)

(TOP VIEW)

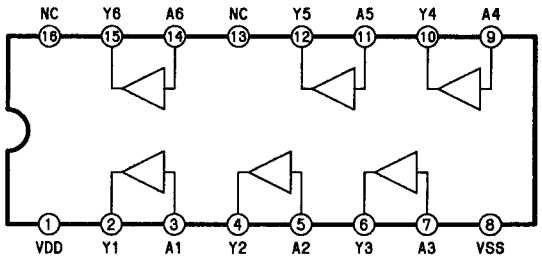

4040
(12-STAGE RIPPLE CARRY BINARY COUNTER/DIVIDER)

(TOP VIEW)

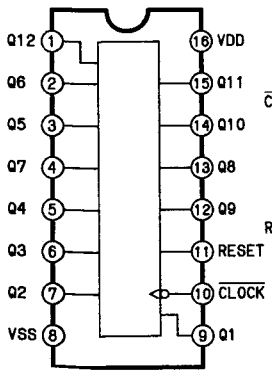

LOGIC DIAGRAM

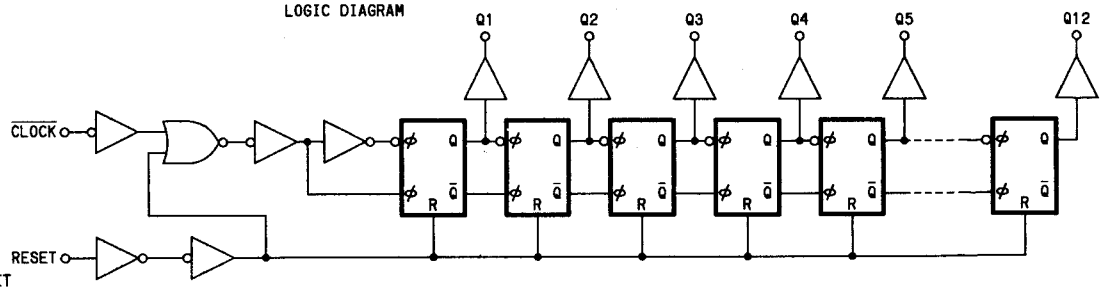

TRUTH TABLE

CLOCK	RESET	QN OUT
×	H	L
⌒	L	NO COUNT
⌓	L	BI COUNT

×: H or L

4051
(SINGLE 8-CHANNEL MULTIPLEXER/DEMULTIPLEXER)

(TOP VIEW)

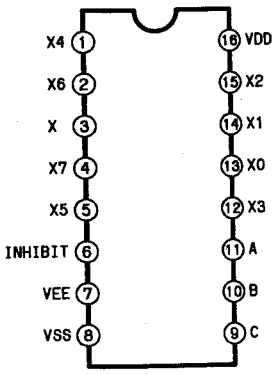

TRUTH TABLE

INPUT STATES				"ON" CHANNEL(S)
INHIBIT	C	B	A	
0	0	0	0	0
0	0	0	1	1
0	0	1	0	2
0	0	1	1	3
0	1	0	0	4
0	1	0	1	5
0	1	1	0	6
0	1	1	1	7
1	X	X	X	NONE

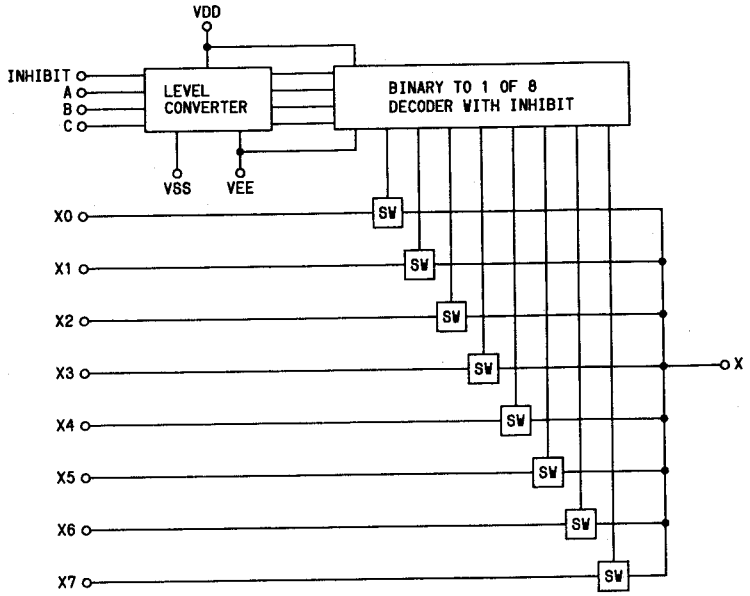

4052
(DIFFERENTIAL 4-CHANNEL MULTIPLEXER/DEMULTIPLEXER)

(TOP VIEW)

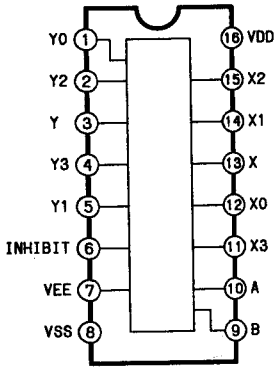

TRUTH TABLE

INPUT STATES			"ON" CHANNEL(S)
INHIBIT	B	A	
0	0	0	X0.Y0
0	0	1	X1.Y1
0	1	0	X2.Y2
0	1	1	X3.Y3
1	X	X	NONE

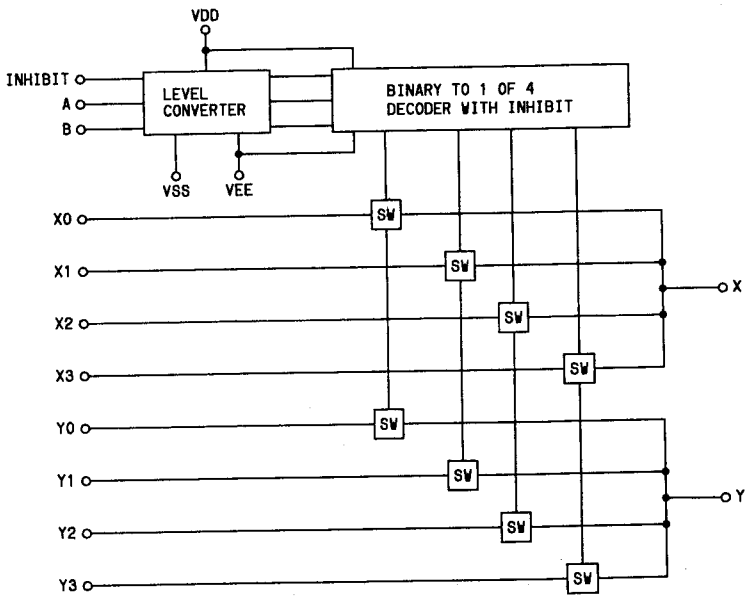

4053
(TRIPLE 2-CHANNEL MULTIPLEXER/DEMULTIPLEXER)

(TOP VIEW)

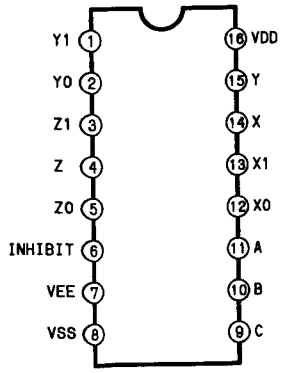

TRUTH TABLE

INPUT STATES				"ON" CHANNEL(S)
INHIBIT	C	B	A	
0	0	0	0	X0.Y0.Z0
0	0	0	1	X1.Y1.Z1
1	X	X	X	NONE

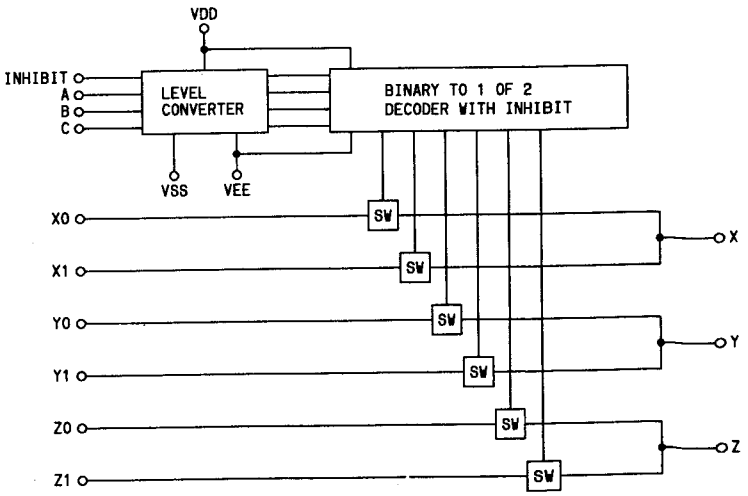

4066
(QUAD BILATERAL SWITCH)

(TOP VIEW)

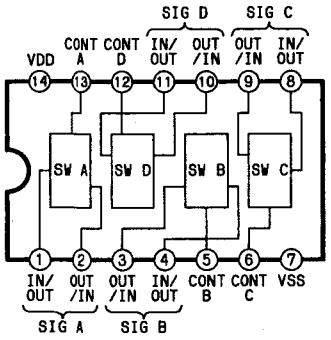

TRUTH TABLE

CONTROL	SWITCH
H	ON
L	OFF

4538
(DUAL PRECISION MONOSTABLE MULTIVIBRATOR)

(TOP VIEW)

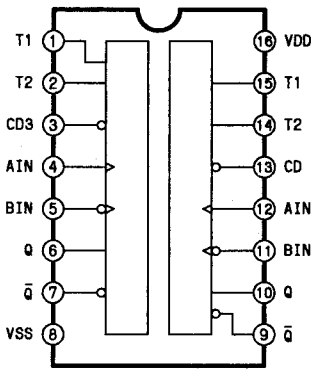

TRUTH TABLE

INPUT			OUTPUT	
A	B̄	CD̄	Q	Q̄
↓	H	H	⊓	⊔
↓	L	H	Q	Q̄
H	↘	H	Q	Q̄
L	↘	H	⊓	⊔
×	×	L	L	H

4081
(QUAD 2-INPUT AND GATE)

(TOP VIEW)

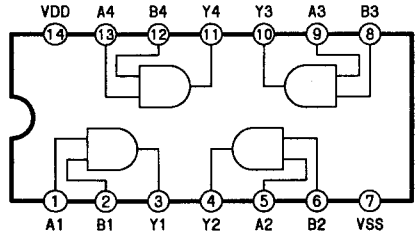

4516
(4-BIT UP/DOWN BINARY COUNTER)

(TOP VIEW)

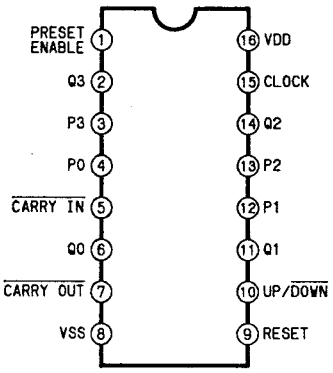

BLOCK DIAGRAM

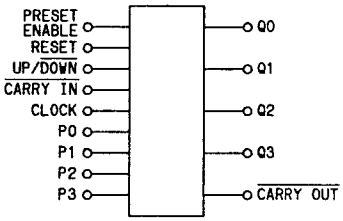

4094
(8-STAGE SHIFT/STORE BUS REGISTER)

(TOP VIEW)

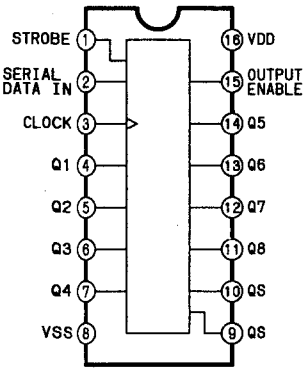

TRUTH TABLE

CARRY IN	UP/DOWN	PRESET ENABLE	RESET	ACTION
H	×	L	L	NO COUNT
L	H	L	L	COUNT UP
L	L	L	L	COUNT DOWN
×	×	H	L	PRESET
×	×	×	H	RESET

BLOCK DIAGRAM

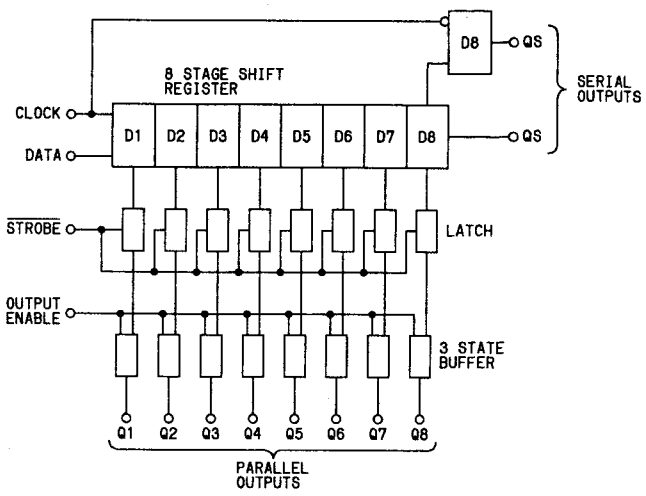

TRUTH TABLE

CL ▲	OUTPUT ENABLE	STROBE	DATA	PARALLEL OUTPUTS		SERIAL OUTPUTS	
				Q1	QN	QS	Q'S
⌐	0	×	×	OC	OC	Q7	NC
⌐	0	×	×	OC	OC	NC	Q7
⌐	1	0	×	NC	NC	Q7	NC
⌐	1	1	0	0	QN-1	Q7	NC
⌐	1	1	1	1	QN-1	Q7	NC
⌐	1	1	1	NC	NC	NC	Q7

▲=LEVEL CHANGE ×=DON'T CARE CASE

7400
(QUAD 2-INPUT NAND GATE)

(TOP VIEW)

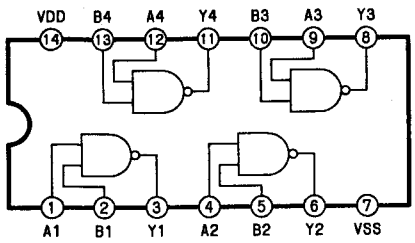

TRUTH TABLE (74HC)

INPUTS		OUTPUTS
A	B	Y
L	L	H
L	H	H
H	L	H
H	H	L

7402
(QUAD 2-INPUT NOR GATE)

(TOP VIEW)

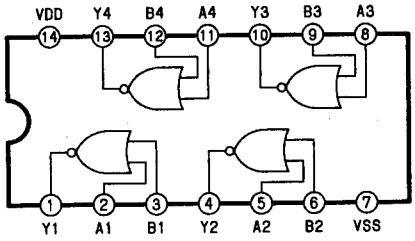

TRUTH TABLE

INPUTS		OUTPUTS
A	B	Y
L	L	H
L	H	L
H	L	L
H	H	L

7404
(HEX.INVERTER)

(TOP VIEW)

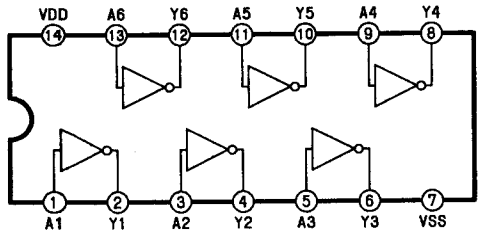

7405
(HEX O. C. INVERTER)

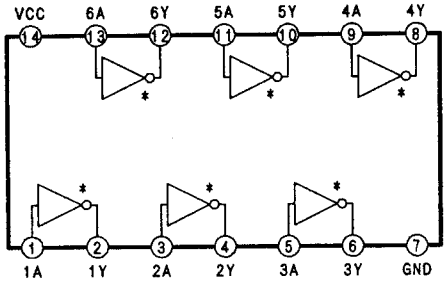

7408
(QUAD 2-INPUT AND GATE)

(TOP VIEW)

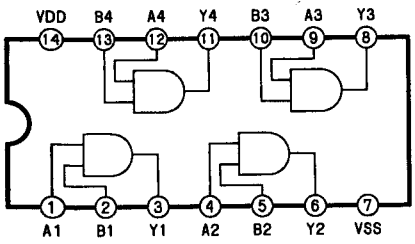

TRUTH TABLE

INPUTS		OUTPUTS
A	B	Y
L	L	L
L	H	L
H	L	L
H	H	H

7410
(TRIPLE 3-INPUT POSITIVE-NAND GATES)

(TOP VIEW)

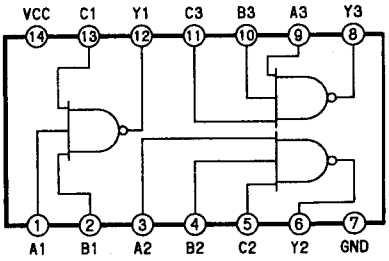

POSITIVE LOGIC:
$Y=\overline{ABC}$

74109
(DUAL J-K FLIP-FLOP WITH PRESET AND CLEAR)

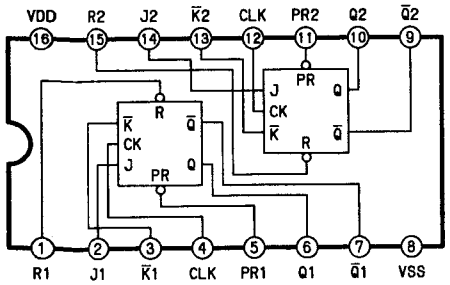

CLK:CLOCK
$\overline{PR}$:PRESET
$\overline{R}$:RESET

TRUTH TABLE (74HC109)

INPUTS					OUTPUTS	
PR	CLR	CLK	J	K̄	Q	Q̄
L	H	×	×	×	H	L
H	L	×	×	×	L	H
L	L	×	×	×	H*	H*
H	H	↑	L	L	L	H
H	H	↑	H	L	TOGGLE	
H	H	↑	L	H	Q0	Q̄0
H	H	↑	H	H	H	L
H	H	L	×	×	Q0	Q̄0

* :UNSTABLE

7411
(TRIPLE 3-INPUT AND GATE)

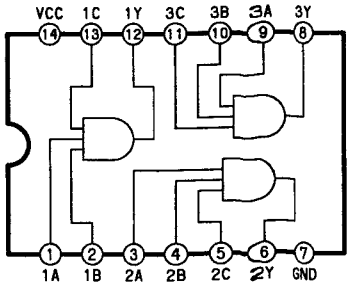

Y=A.B.C

74112
(DUAL J-K FLIP-FLOP WITH PRESET AND CLEAR)

(TOP VIEW)

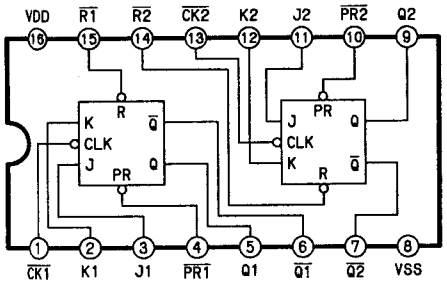

CLK:CLOCK
$\overline{PR}$:PRESET
$\overline{R}$:RESET

TRUTH TABLE (74HC112)

INPUTS					OUTPUTS	
PR	CLR	CLK	J	L	Q	$\overline{Q}$
L	H	×	×	×	H	L
H	L	×	×	×	L	H
L	L	×	×	×	L*	L*
H	H	↓	L	L	Q0	$\overline{Q0}$
H	H	↓	H	L	H	L
H	H	↓	L	H	L	H
H	H	↓	H	H	TOGGLE	
H	H	H	×	×	Q0	$\overline{Q0}$

* :UNSTABLE

74123
(DUAL RETRIGGERABLE MONOSTABLE MULTIVIBRATOR)

(TOP VIEW)

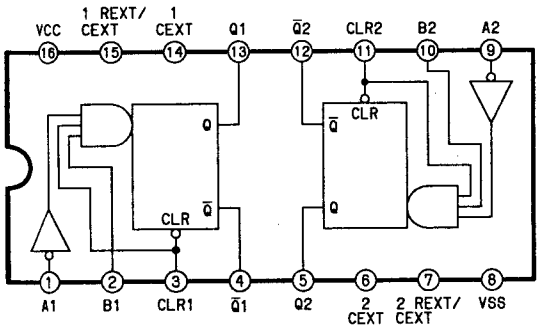

TRUTH TABLE

INPUTS			OUTPUTS	
CLEAR	A	B	Q	$\overline{Q}$
L	×	×	L	H
×	H	×	L	H
×	×	L	L	H
H	L	↑	⎍	⎎
H	↓	H	⎍	⎎
↑	L	H	⎍	⎎

74126
(QUAD 3 STATE BUS BUFFERS)

(TOP VIEW)

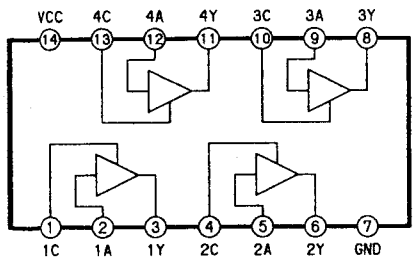

TRUTH TABLE

INPUTS		OUTPUTS
A	C	Y
H	H	H
L	H	L
X	L	Z

74138
(3-TO-8 LINE DECODER)

(TOP VIEW)

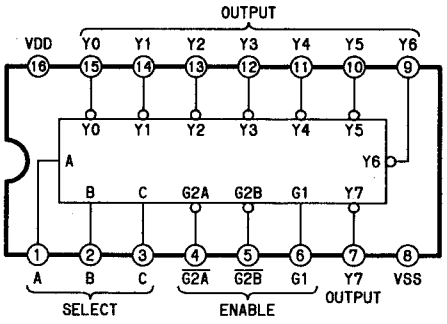

TRUTH TABLE (74HC138)

INPUTS						OUTPUTS							
ENABLE		SELECT											
G1	$\overline{G2}$*	C	B	A	Y0	Y1	Y2	Y3	Y4	Y5	Y6	Y7
×	H	×	×	×	H	H	H	H	H	H	H	H
L	×	×	×	×	H	H	H	H	H	H	H	H
H	L	L	L	L	L	H	H	H	H	H	H	H
H	L	L	L	H	H	L	H	H	H	H	H	H
H	L	L	H	L	H	H	L	H	H	H	H	H
H	L	L	H	H	H	H	H	L	H	H	H	H
H	L	H	L	L	H	H	H	H	L	H	H	H
H	L	H	L	H	H	H	H	H	H	L	H	H
H	L	H	H	L	H	H	H	H	H	H	L	H
H	L	H	H	H	H	H	H	H	H	H	H	L

* $\overline{G2}=\overline{G2A}+\overline{G2B}$

74139
(DUAL 2-TO-4 LINE DECODER)

(TOP VIEW)

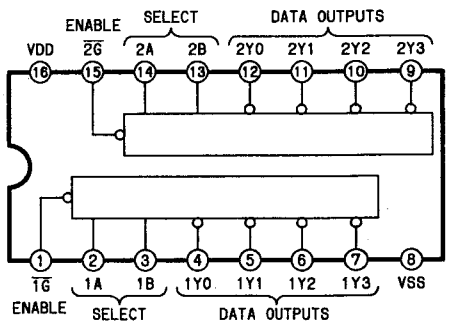

TRUTH TABLE

INPUTS			OUTPUTS			
ENABLE	SELECT					
G	B	A	Y0	Y1	Y2	Y3
H	×	×	H	H	H	H
L	L	L	L	H	H	H
L	L	H	H	L	H	H
L	H	L	H	H	L	H
L	H	H	H	H	H	L

74151
(8-CHANNEL DIGITAL MULTIPLEXER)

(TOP VIEW)

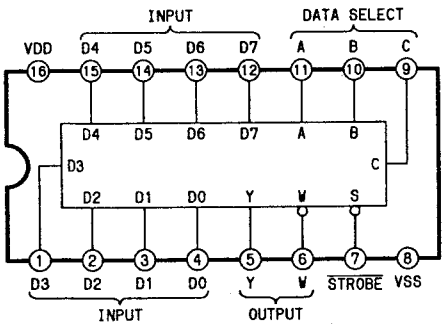

TRUTH TABLE

INPUTS				OUTPUTS	
SELECT			STROBE		
C	B	A	S	Y	W
×	×	×	H	L	H
L	L	L	L	D0	$\overline{D0}$
L	L	H	L	D1	$\overline{D1}$
L	H	L	L	D2	$\overline{D2}$
L	H	H	L	D3	$\overline{D3}$
H	L	L	L	D4	$\overline{D4}$
H	L	H	L	D5	$\overline{D5}$
H	H	L	L	D6	$\overline{D6}$
H	H	H	L	D7	$\overline{D7}$

74161
(4-BIT SYNCHRONOUS BINARY COUNTER)

(TOP VIEW)

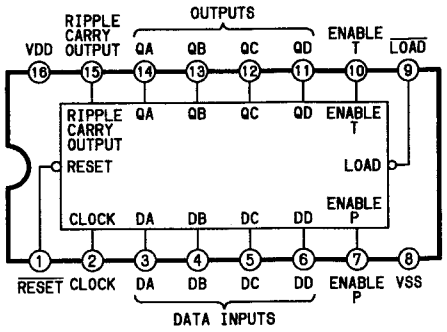

TRUTH TABLE (74HC160/74HC161)

INPUT					OUTPUT
CLOCK	$\overline{RESET}$	$\overline{LOAD}$	ENABLE P	ENABLE T	Qn
×	L	×	×	×	L
↑	H	L	×	×	LOAD
↑	H	H	H	H	COUNT
×	H	H	L	×	NO COUNT
×	H	H	×	L	NO COUNT

H:HIGH L:LOW X:H or L
n:A~D

FUNCTION TABLE (74161)

INPUT					OUTPUT		
CLEAR	LOAD	CK	ENABLE P	ENABLE T	QA QB QC QD	RIPPLE CARRY	FUNCTION
H	H		H	H		—	COUNT
H	L	↑	X	X	DA DB DC DD	—	DATA SET
↓	X	X	X	X	L L L L	—	CLEAR
H	X	X	X	H	H H H H	H	—

74153
(DUAL 4 TO 1 DATA SELECTORS)

(TOP VIEW)

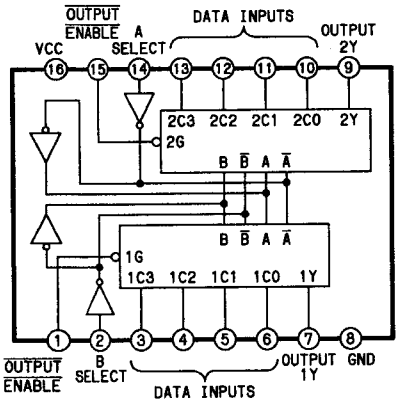

TRUTH TABLE

INPUT			OUTPUT
SELECT		$\overline{OUTPUT}$	Y
B	A	ENABLE	
×	×	H	L
L	L	L	C0
L	H	L	C1
H	L	L	C2
H	H	L	C3

H:HIGH L:LOW X:H or L

74157.74158
(QUAD 2-INPUT MULTIPLEXER)

(TOP VIEW)

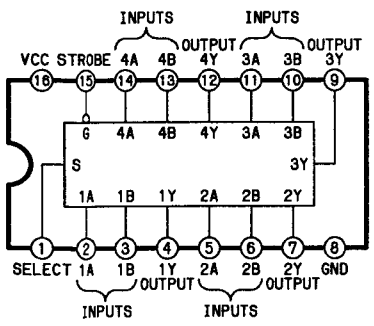

TRUTH TABLE (74HC157)

INPUTS				OUTPUT Y	
STROBE	SELECT	A	B	HC157	HC158
H	×	×	×	L	H
L	L	L	×	L	H
L	L	H	×	H	L
L	H	×	L	L	H
L	H	×	H	H	L

74163
(4-BIT SYNCHRONOUS BINARY COUNTER WITH SYNCHRONOUS CLEAR)

(TOP VIEW)

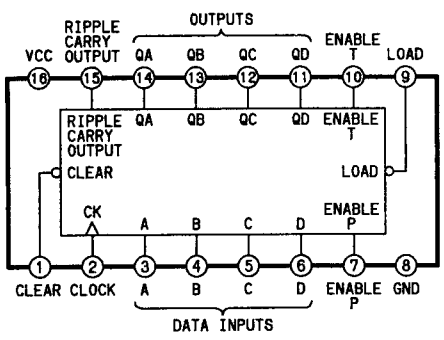

TRUTH TABLE

CLK	CLR	ENP	ENT	LOAD	FUNCTION
↑	L	X	X	X	CLEAR
X	H	H	L	H	COUNT & RC DISABLED
X	H	L	H	H	COUNT DISABLED
X	H	L	L	H	COUNT & RC DISABLED
↑	H	X	X	L	LOAD
↑	H	H	H	H	INCREMENT COUNTER

74164
(8-BIT SERIAL-IN/PARALLEL-OUT SHIFT REGISTER)

(TOP VIEW)

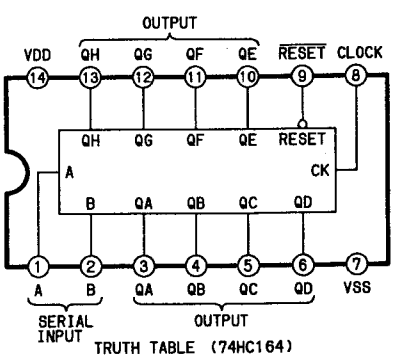

TRUTH TABLE (74HC164)

INPUT				OUTPUT
$\overline{RESET}$	CLOCK	A	B	QA QB QH
L	×	×	×	L L L
H	↓	×	×	NO CHANGE
H	↑	L	×	L QA QG
H	↑	×	L	L QA QG
H	↑	H	H	H QA QG

H:HIGH L:LOW X:H or L

74165
(PARALLEL-LOAD 8-BIT SHIFT REGISTERS)

(TOP VIEW)

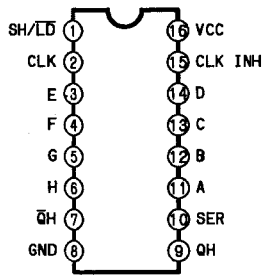

TRUTH TABLE

INPUT			FUNCTION
SH/$\overline{LD}$	CLK	CLK INH	
L	X	X	PARALLEL INPUT
H	H	X	NO CHANGE
H	X	H	
H	L	↑	SHIFT
H	↑	L	

FUNCTION TABLE

INPUT			FUNCTION
SHIFT/LOAD	CK	CK INHIBIT	
H	↑	L	RIGHT SHIFT
L	X	X	DATA SET
H	X	H	HOLD

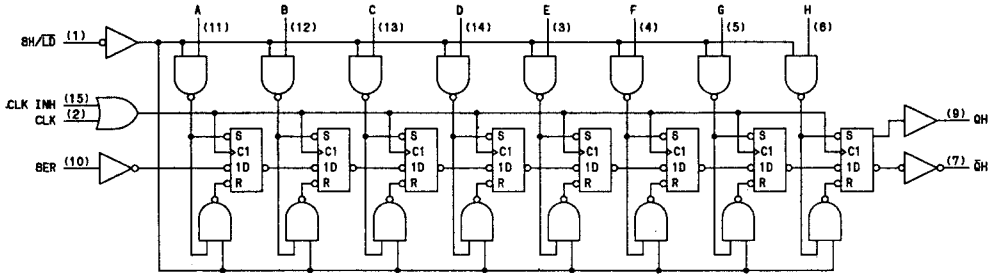

74238
(3 TO 8 LINE DECODER/DEMULTIPLEXER)

(TOP VIEW)

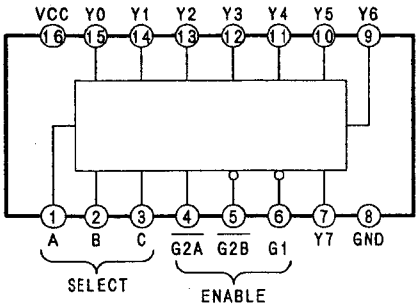

FUNCTION TABLE

INPUT					OUTPUT							
ENABLE		SELECT										
G1	$\overline{G2*}$	C	B	A	Y0	Y1	Y2	Y3	Y4	Y5	Y6	Y7
X	H	X	X	X	L	L	L	L	L	L	L	L
L	X	X	X	H	L	L	L	L	L	L	L	L
H	L	L	L	L	H	L	L	L	L	L	L	L
H	L	L	L	H	L	H	L	L	L	L	L	L
H	L	L	H	L	L	L	H	L	L	L	L	L
H	L	L	H	H	L	L	L	H	L	L	L	L
H	L	H	L	L	L	L	L	L	H	L	L	L
H	L	H	L	H	L	L	L	L	L	H	L	L
H	L	H	H	L	L	L	L	L	L	L	H	L
H	L	H	H	H	L	L	L	L	L	L	L	H

$\overline{G2*}$=G2A+$\overline{G2B}$

H:HIGH LEVEL L:LOW LEVEL X:H or L

74221
(DUAL NON-RETRIGGERABLE MONOSTABLE MULTIVIBRATOR)

(TOP VIEW)

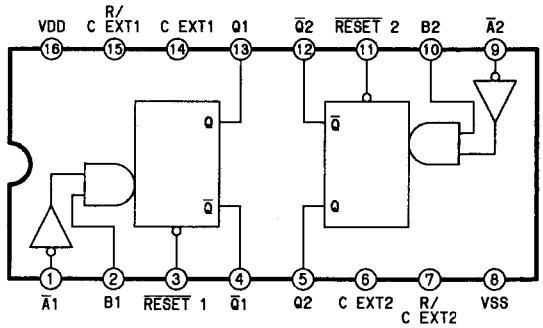

(74HC221)

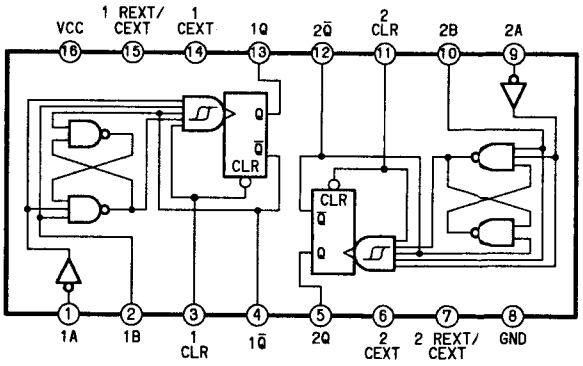

(74221)

TRUTH TABLE (74HC221)

INPUTS			OUTPUTS	
CLEAR	A	B	Q	$\overline{Q}$
L	X	X	L	H
X	H	X	L	H
X	X	L	L	H
H	L	↑	⎍	⎎
H	↓	H	⎍	⎎
↑	L	H	⎍	⎎

74175
(QUAD D-TYPE FLIP-FLOP WITH CLEAR)

(TOP VIEW)

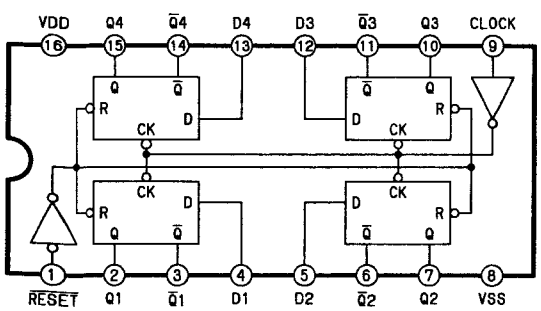

TRUTH TABLE (74HC175)

INPUT			OUTPUT	
CLOCK	$\overline{RESET}$	D	Q	$\overline{Q}$
X	L	X	L	H
⎍	H	H	H	L
⎍	H	L	L	H
L	H	X	NO CHANGE	

H:HIGH L:LOW X:H or L

74240
(INVERTING OCTAL 3-STATE BUFFER)

(TOP VIEW)

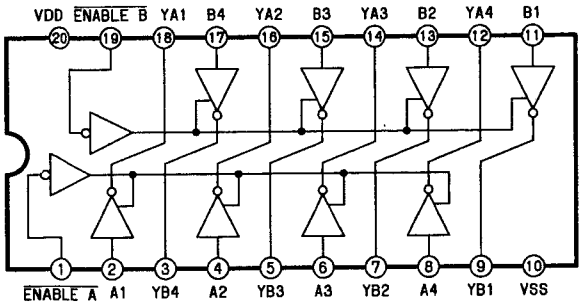

TRUTH TABLE (74HC240)

$1\bar{G}$	1A	1Y	$2\bar{G}$	2A	2Y
L	L	H	L	L	H
L	H	L	L	H	L
H	L	Z	H	L	Z
H	H	Z	H	H	Z

74244
(OCTAL 3-STATE BUFFER)

(TOP VIEW)

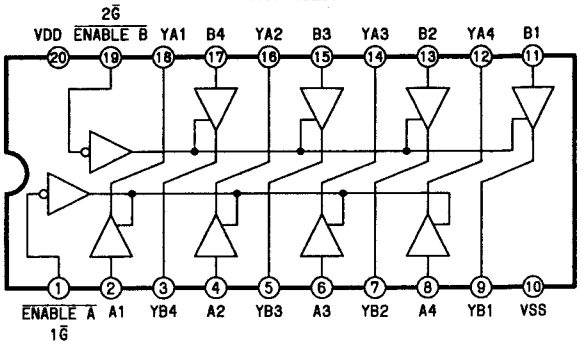

TRUTH TABLE (74HC244)

$1\bar{G}$	1A	1Y	$2\bar{G}$	2A	2Y
L	L	L	L	L	L
L	H	H	L	H	H
H	L	Z	H	L	Z
H	H	Z	H	H	Z

74245
(OCTAL 3-STATE BUS TRANSCEIVERS)

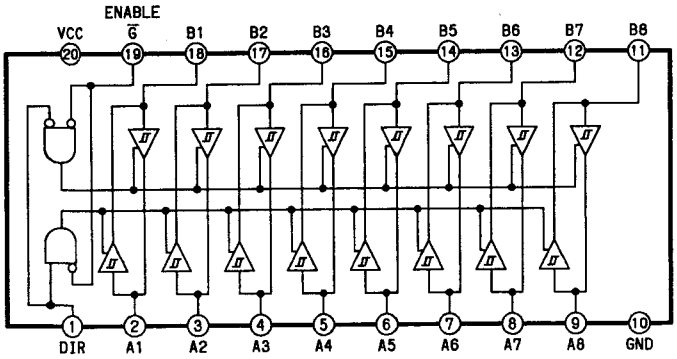

74253
(DUAL 3 STATE 4 TO 1 DATA SELECTOR)

(TOP VIEW)

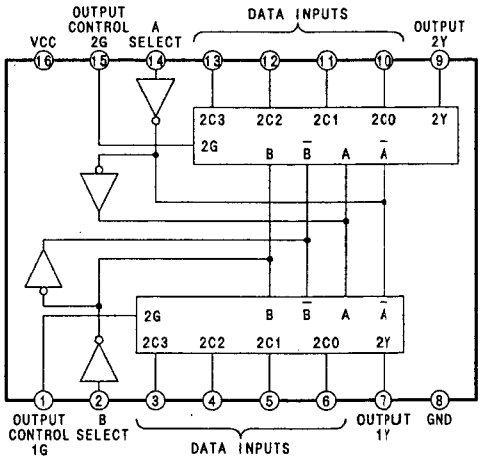

FUNCTION TABLE

INPUTS			OUTPUT
SELECT B	SELECT A	OUTPUT CONTROL $\bar{G}$	Y
X	X	H	Z
L	L	L	C0
L	H	L	C1
H	L	L	C2
H	H	L	C3

74257
(QUAD 2-CHANNEL 3-STATE MULTIPLEXER)

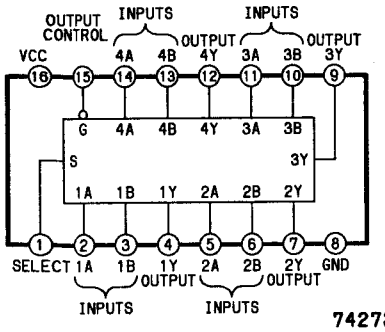

FUNCTION TABLE (74257)

INPUTS		OUTPUT
SELECT	OUTPUT CONTROL	Y
X	H	Z
L	L	A
H	L	B

TRUTH TABLE (74HC257)

INPUTS				OUTPUT
OUTPUT CONTROL	SELECT	A	B	Y
H	X	X	X	Z
L	L	L	X	L
L	L	H	X	H
L	H	X	L	L
L	H	X	H	H

7427
(TRIPLE 3-INPUT NOR GATE)

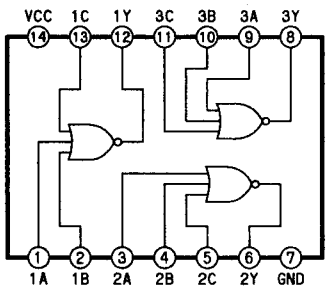

74273
(OCTAL D-TYPE FLIP-FLOP WITH CLEAR)

(TOP VIEW)

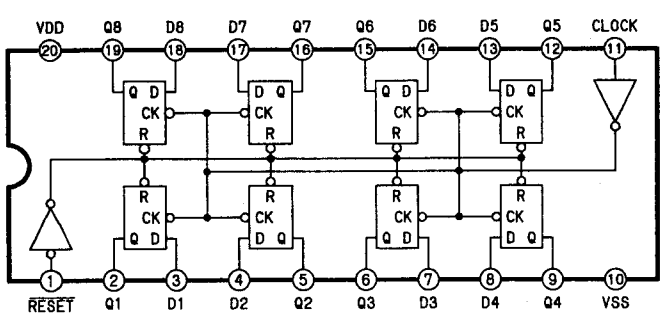

TRUTH TABLE (74HC273)

INPUTS			OUTPUTS
CLEAR	CLOCK	D	Q
L	X	X	L
H	↑	H	H
H	↑	L	L
H	L	X	Q0

7432
(QUAD 2-INPUT OR GATE)

(TOP VIEW)

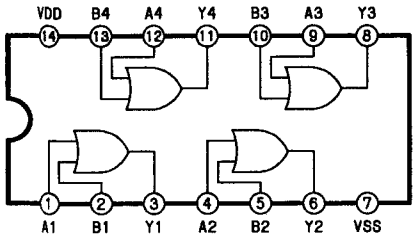

74541
(OCTAL 3-STATE BUFFER)

(TOP VIEW)

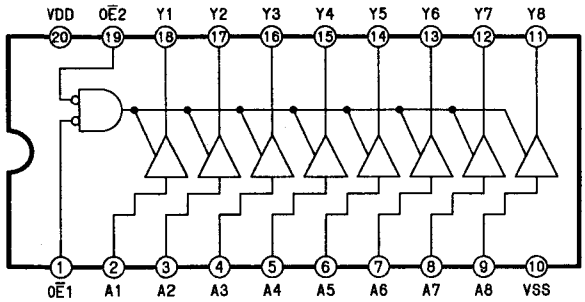

$\overline{0E1}.\overline{0E2}$:$\overline{\text{OUTPUT ENABLE}}$

TRUTH TABLE

INPUT			OUTPUT
$\overline{0E1}$	$\overline{0E2}$	A	Y
L	L	L	L
L	L	H	H
H	×	×	Z
×	H	×	Z

X:H or L Z:HIGH IMPEDANCE

74574
(OCTAL D-TYPE FLIP-FLOP)

(TOP VIEW)

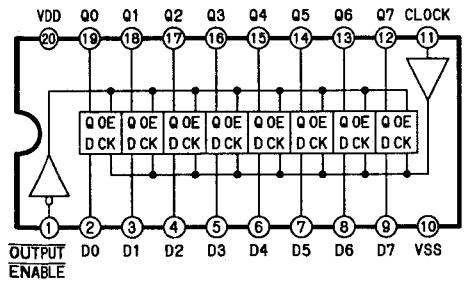

TRUTH TABLE (74HC574)

INPUT			OUTPUT
$\overline{\text{OUTPUT ENABLE}}$	CLOCK	DATA D	Q
L	↑	H	H
L	↑	L	L
L	↓	×	NO CHANGE
H	×	×	Z

X:H or L Z:HIGH IMPEDANCE

74688
(8 BIT EQUAL-TO COMPARATOR)

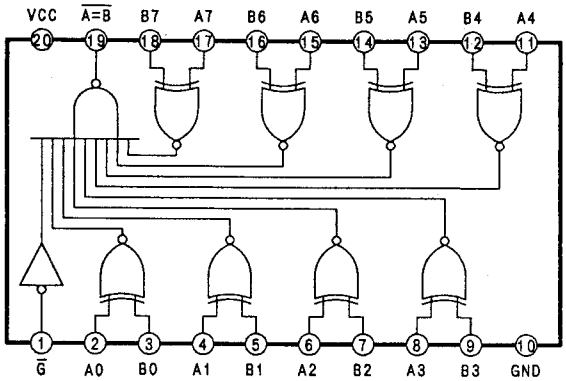

74573
(OCTAL 3 STATE D-LATCHES)

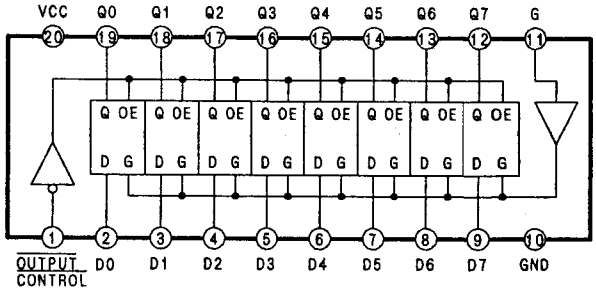

INPUT		FUNCTION
OUTPUT CONTROL	LATCH ENABLE	
L	L	LATCH (HOLD)
L	H	Q=D
H	X	HIGH-Z

74595
(8-BIT SHIFT REGISTER WITH OUTPUT LATCH)

(TOP VIEW)

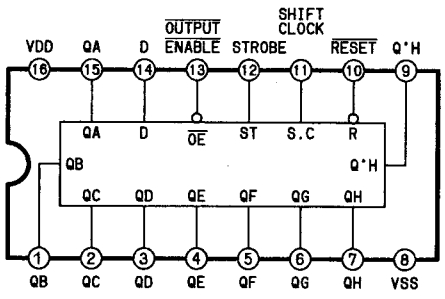

QA～QH:PARALLEL OUTPUTS
Q'H :SERIAL OUTPUT

TRUTH TABLE (74HC595)

RCK	SCK	$\overline{SCLR}$	$\overline{G}$	FUNCTION
×	×	×	1	QA THRU QH=TRI-STATE
×	×	L	×	SHIFT REGISTER CLEARED QH'=0
×	↑	H	×	SHIFT REGISTER CLOCKED QN=Qn-1.Q0=SER
↑	×	H	×	CONTENTS OF SHIFT REGISTER TRANSFERRED TO OUTPUT LATCHES

74682
74684
(8-BIT MAGNITUDE COMPARATORS)

(TOP VIEW)

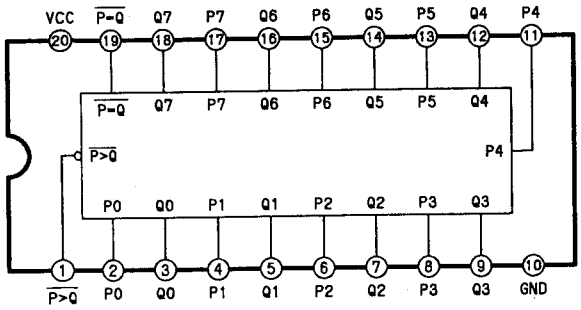

7486
(QUAD EXCLUSIVE OR GATE)

(TOP VIEW)

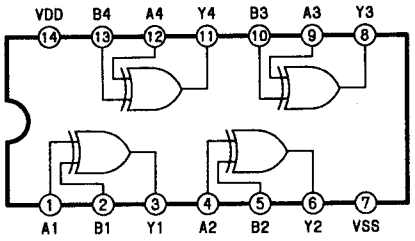

$Y = A \oplus B = \bar{A}B + A\bar{B}$

TRUTH TABLE

INPUTS		OUTPUTS
A	B	Y
L	L	L
L	H	H
H	L	H
H	H	L

AD707KR
(SUPPER LOW DRIFT)

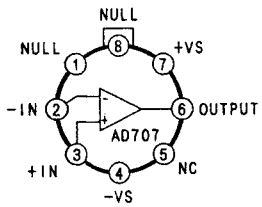

NC=NO CONNECT

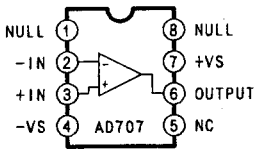

NC=NO CONNECT

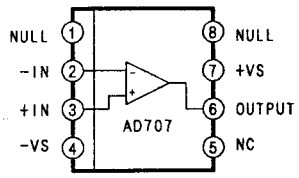

NC=NO CONNECT

AD9300 (SELECT SWITCH)
(TOP VIEW)

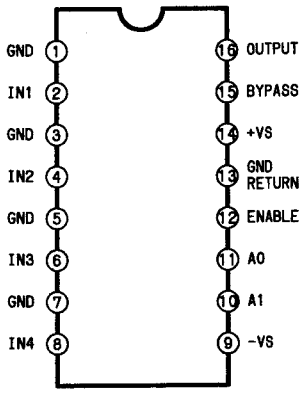

AK5326
(HIGH PERFORMANCE STEREO A/D CONVERTER)

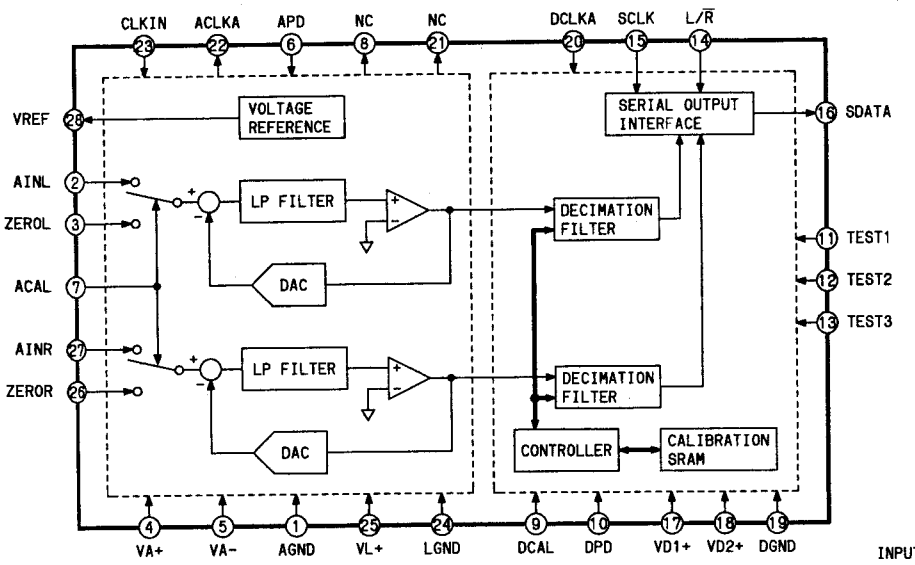

AM26LS31PC
(QUAD DIFF LINE(RS422)DRIVER)

TRUTH TABLE			
IN	CONTROL (E/$\bar{E}$)	NON-INVERTING OUTPUT	INVERTING OUTPUT
H	H/L	H	L
L	H/L	L	H
X	L/H	Z	Z

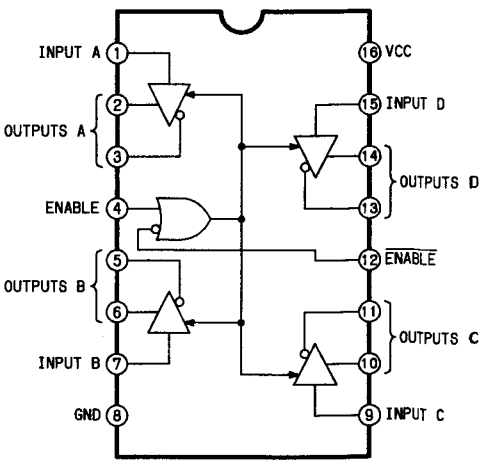

7474
(DUAL D-TYPE FLIP-FLOP)

(TOP VIEW)

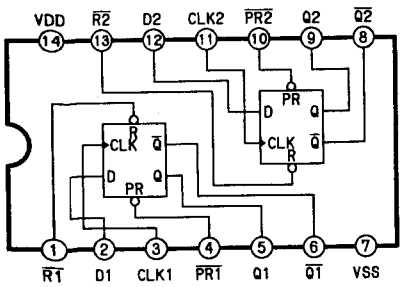

CLK:CLOCK
$\overline{PR}$:$\overline{PRESET}$
$\overline{R}$:$\overline{RESET}$
D:DATA

TRUTH TABLE (74HC74)

INPUTS				OUTPUTS	
PR	CLR	CLK	D	Q	$\bar{Q}$
L	H	×	×	H	L
H	L	×	×	L	H
L	L	×	×	H*	H*
H	H	↑	H	H	L
H	H	↑	L	L	H
H	H	L	×	Q0	$\bar{Q}$0

*:UNSTABLE

AM26LS32PC
(QUAD DIFF LINE(RS422/423)RECEIVER)

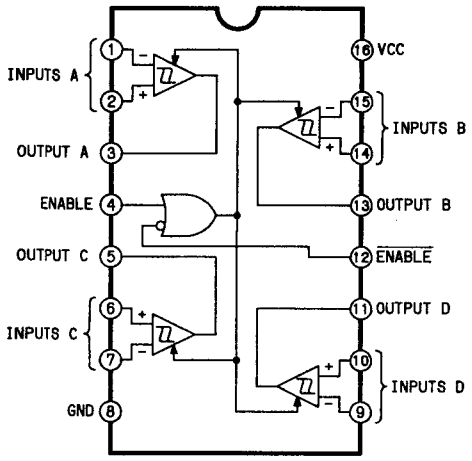

AN6558/S
(LOW NOISE . HIGH SPEED AMP)

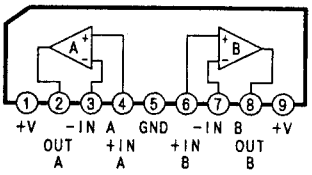

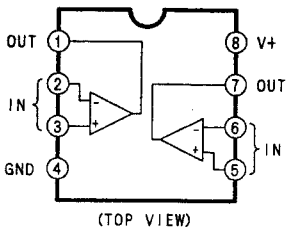

(TOP VIEW)

AN6873N
(FLUORESCENT DISPLAY TUBE DRIVER CIRCUITS)

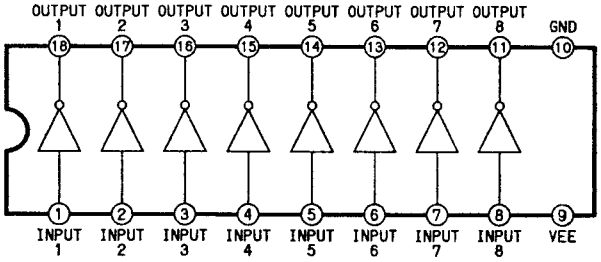

AM27C128
(16.384×8-BIT CMOS EPROM)

BLOCK DIAGRAM

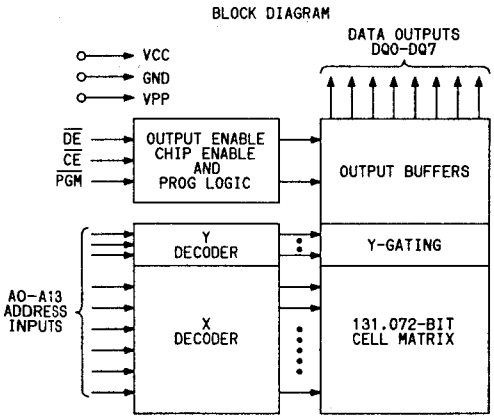

AN7805

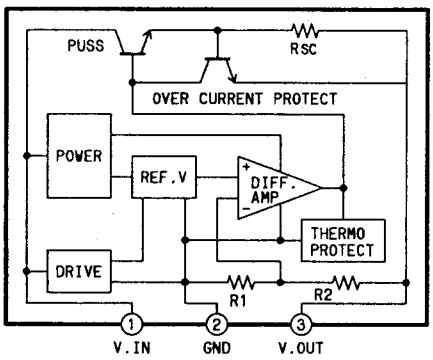

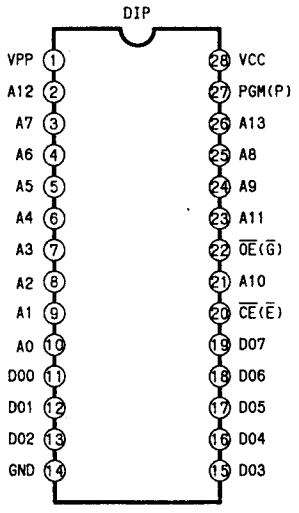

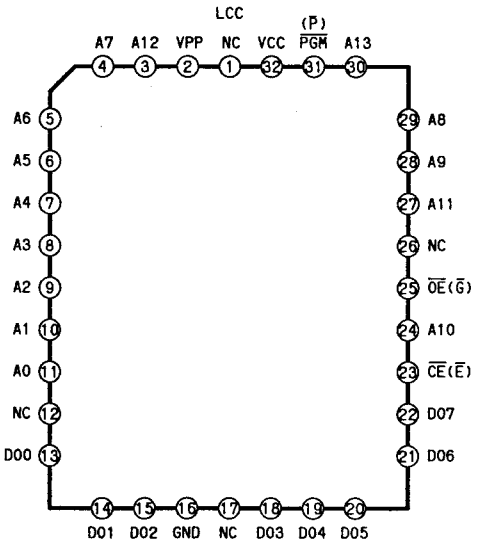

AN78L00
(3-TERMINAL POSITIVE OUTPUT VOLTAGE REGULATOR)

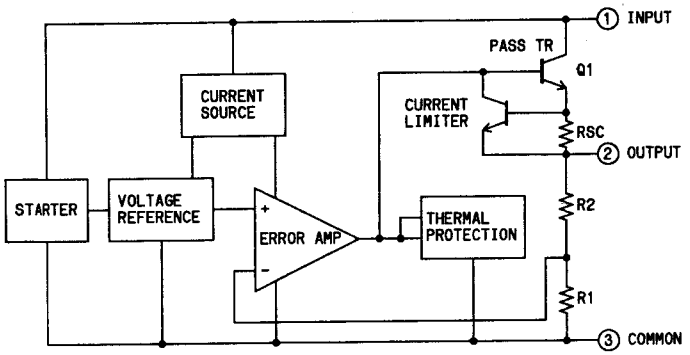

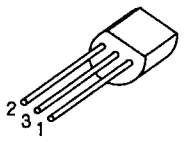

AN78N00
(3-TERMINAL POSITIVE OUTPUT VOLTAGE REGULATOR)

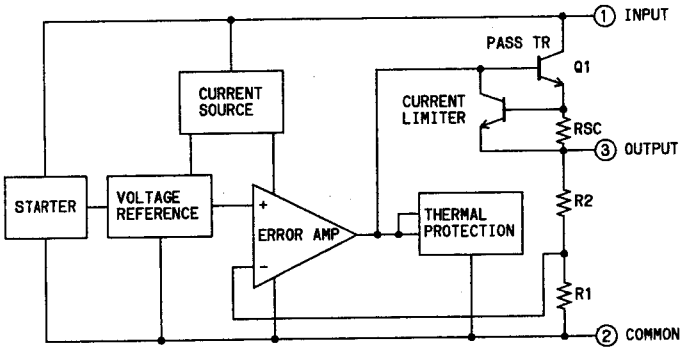

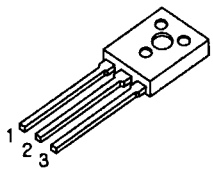

AN79L00
(3-TERMINAL NEGATIVE OUTPUT VOLTAGE REGULATOR)

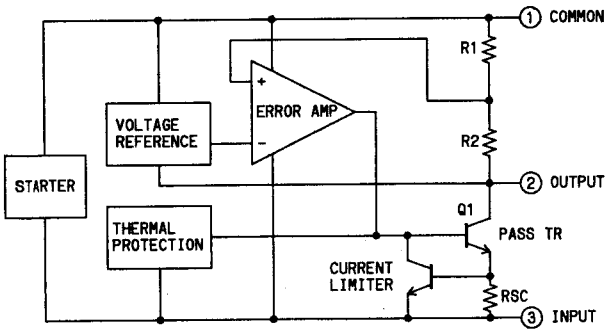

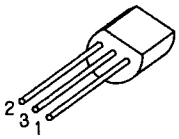

BA301

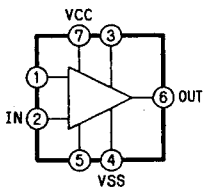

AN79N00
(3-TERMINAL NEGATIVE OUTPUT VOLTAGE REGULATOR)

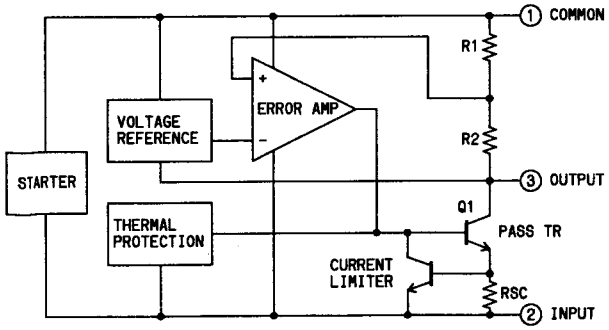

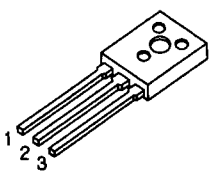

AN91A12S

(SYNC SEPARATOR)

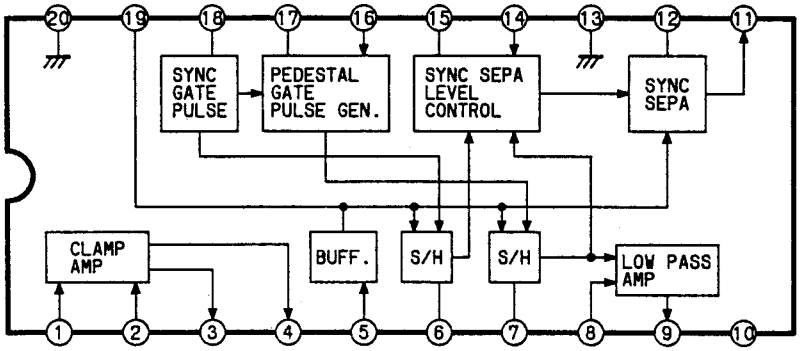

CXD2105AQ

DIGITAL COMB FILTER FOR VTR

(TOP VIEW)

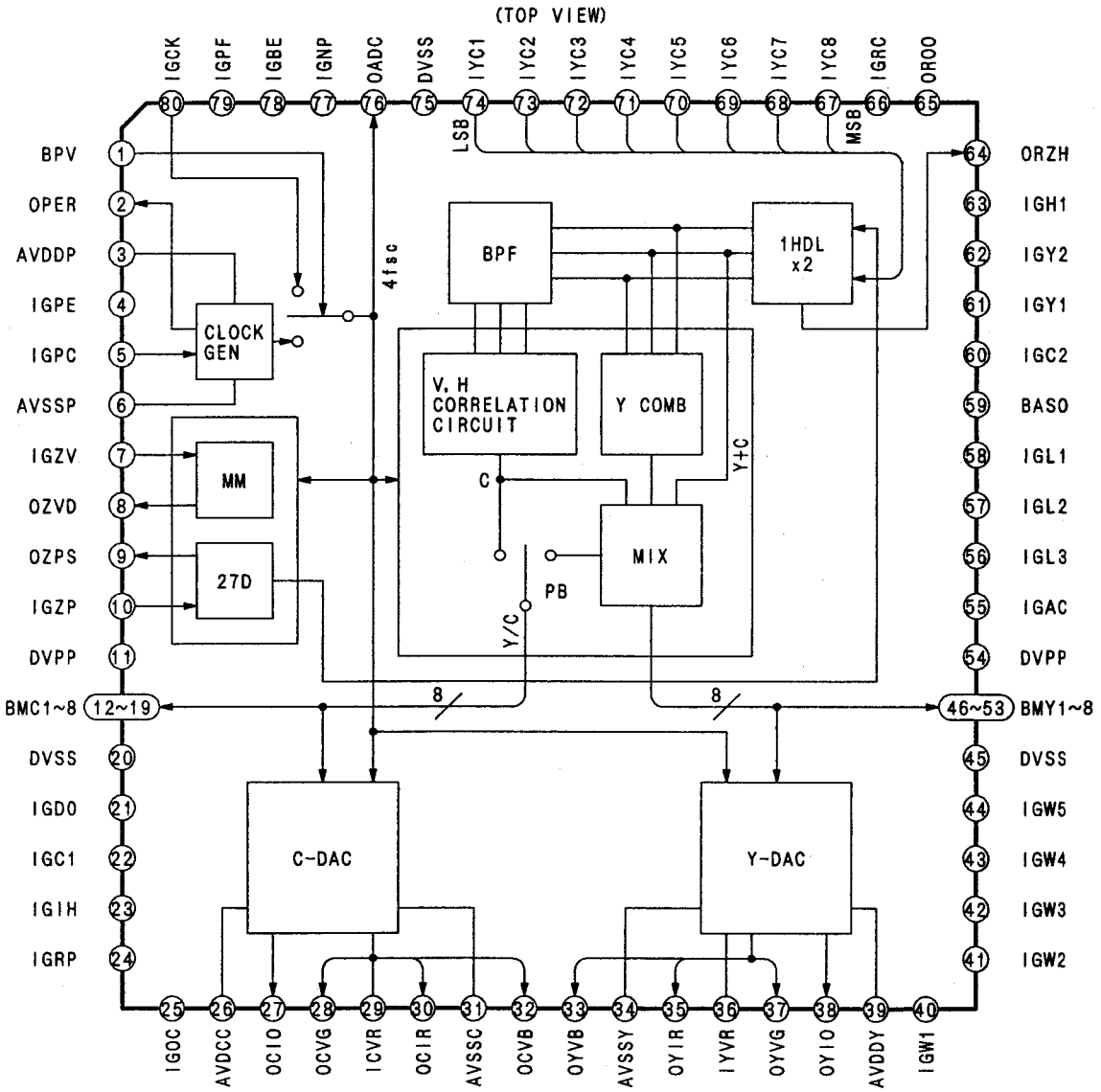

BA6238
(LOADING REGULATOR)

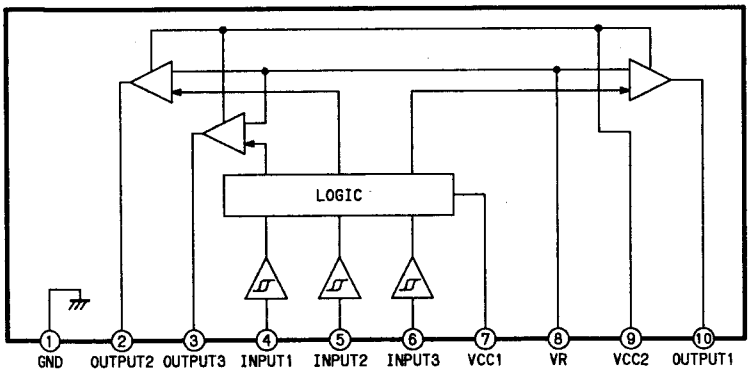

DS9637A
(DUAL DIFFERENTIAL LINE RECEIVER)

(TOP VIEW)

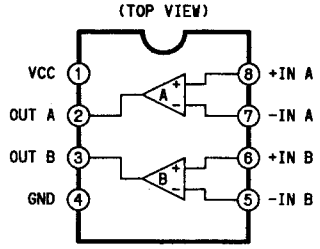

CXD1175AM
(8BIT 20MSPS VIDEO A/D CONVERTER)

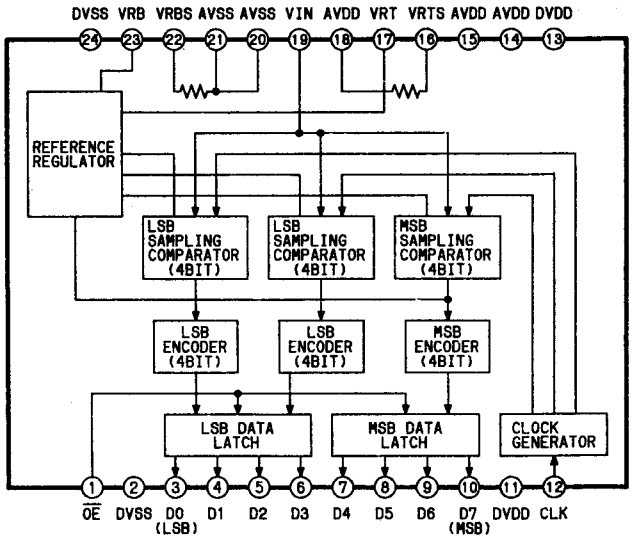

DAC10-GX (10-BIT D/A CONVERTER)
(18PIN HERMETIC DIP)

(TOP VIEW)

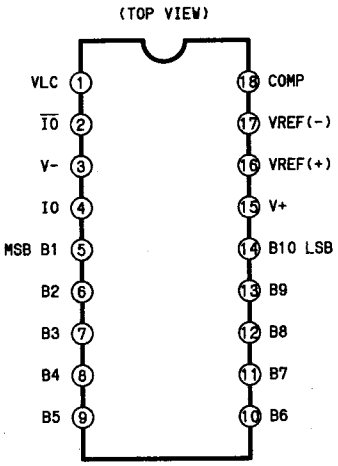

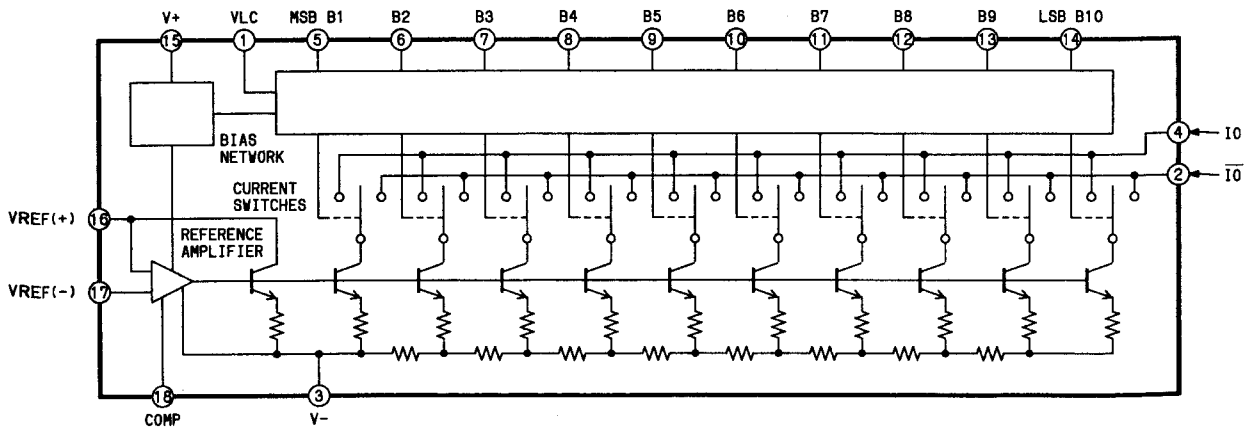

DG508AC

CMOS ANALOG SWITCH/MULTIPLEXER

(TOP VIEW)

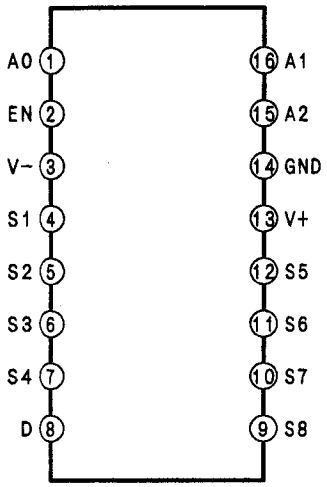

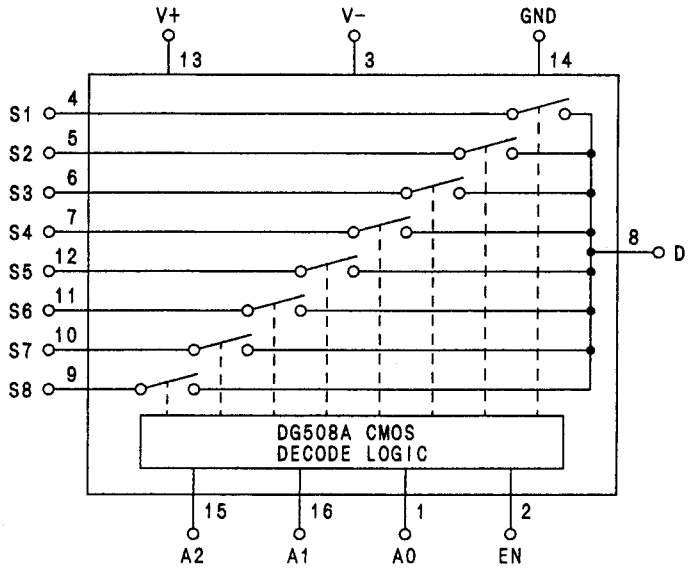

DG508A

A2	A1	A0	EN	ON SWITCH
X	X	X	0	NONE
0	0	0	1	1
0	0	1	1	2
0	1	0	1	3
0	1	1	1	4
1	0	0	1	5
1	0	1	1	6
1	1	0	1	7
1	1	1	1	8

EPM5032 (C-MOS EPLD)

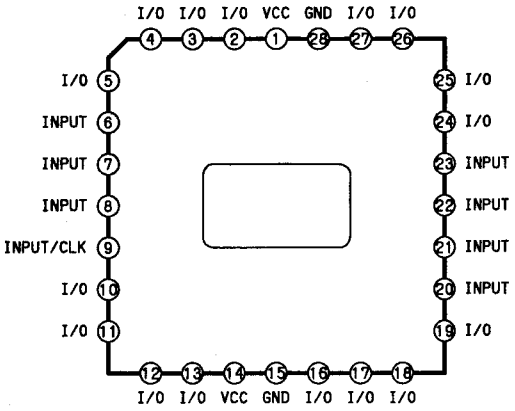

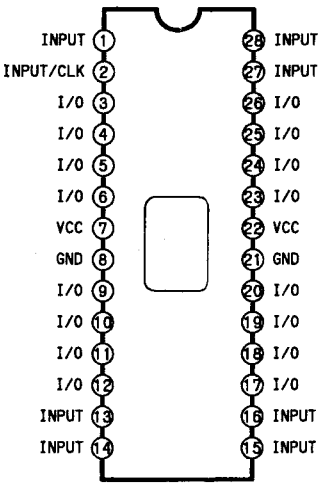

EP610

(16 MACROCELL EPLD)

(TOP VIEW)

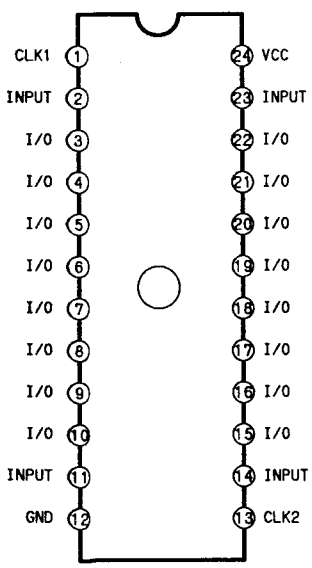

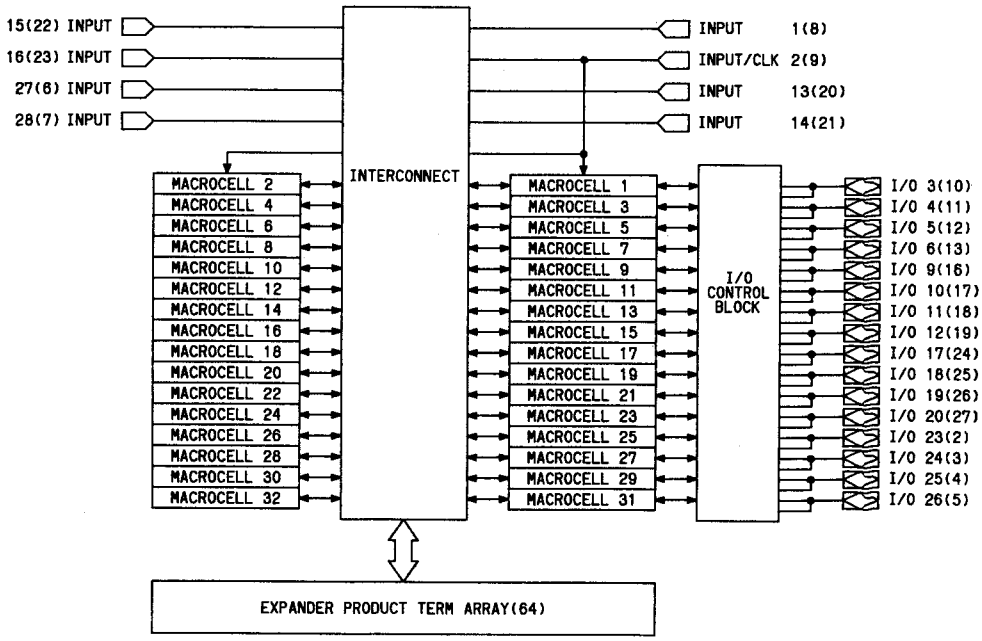

HD64180
(8BIT MC)

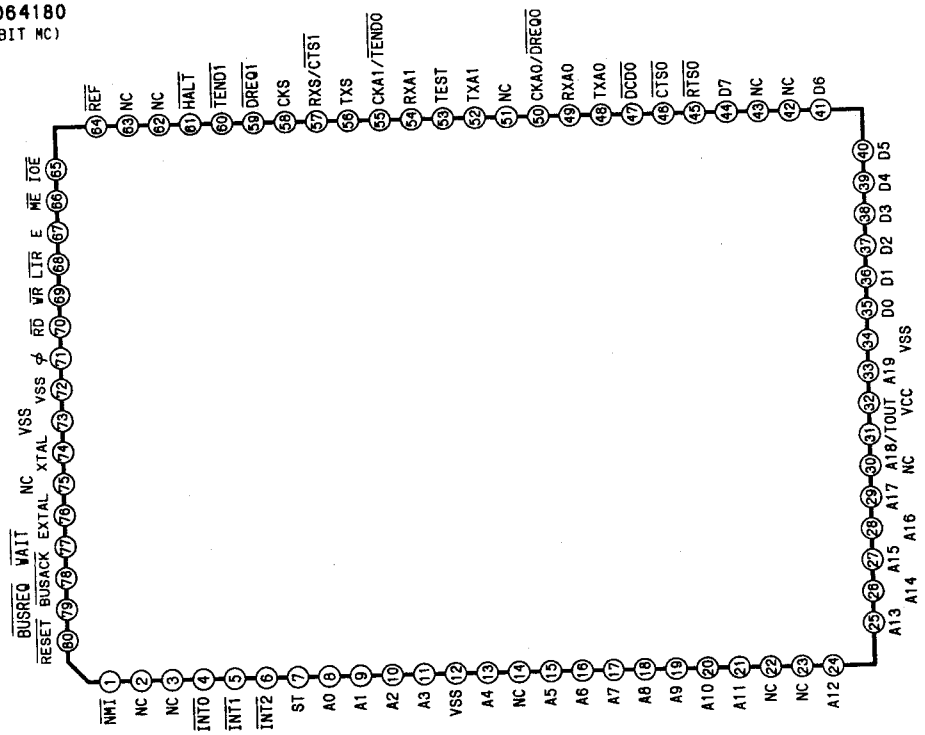

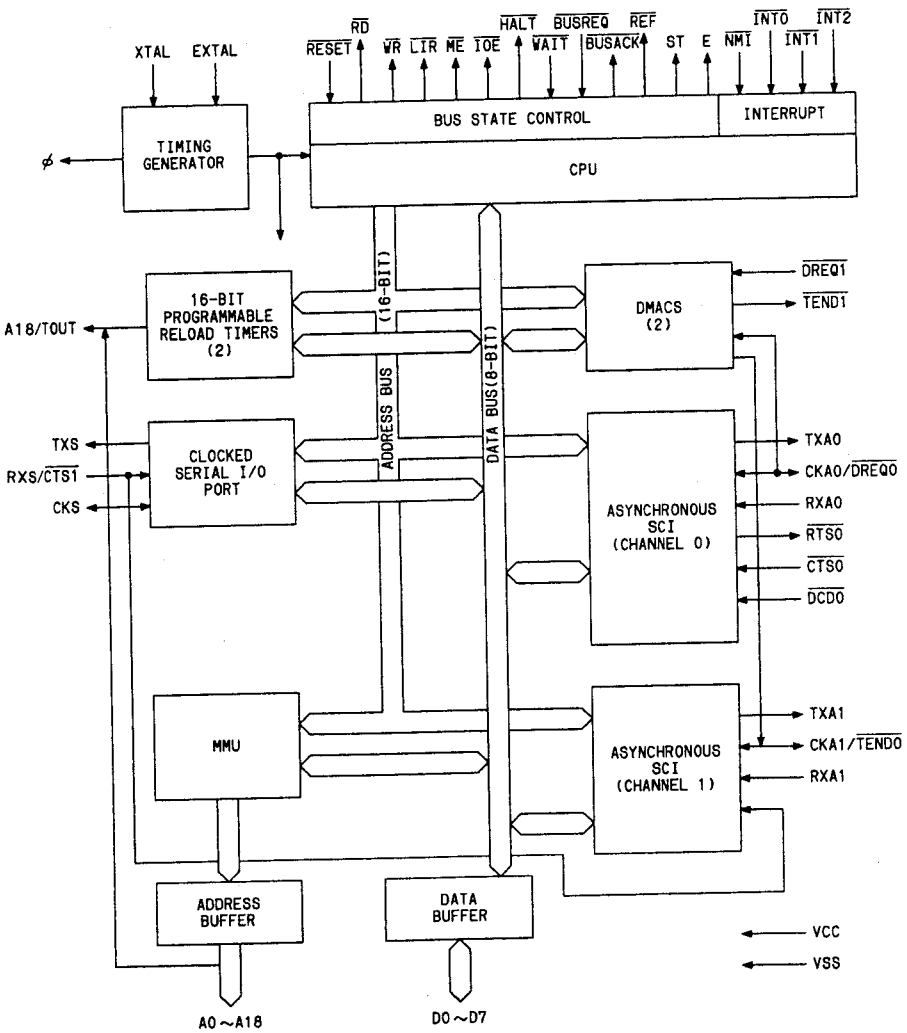

HD10125
(QUADRUPLE ECL TO TTL TRANSLATORS)
(TOP VIEW)

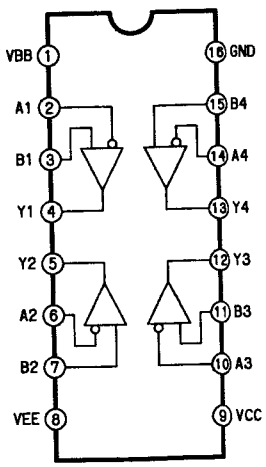

HM628128LFP7

(131.072×8BIT S-RAM)

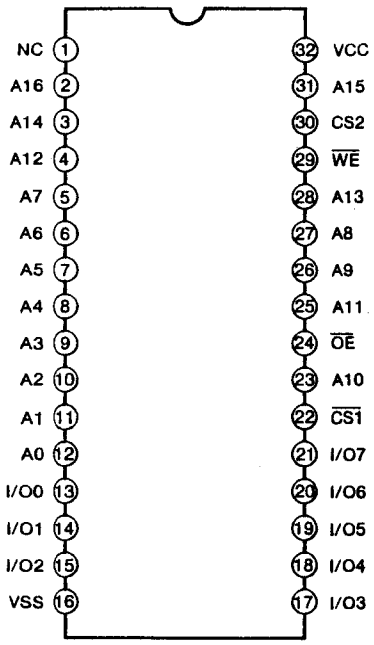

L7A0541

(80PIN QFP)

(TOP VIEW)

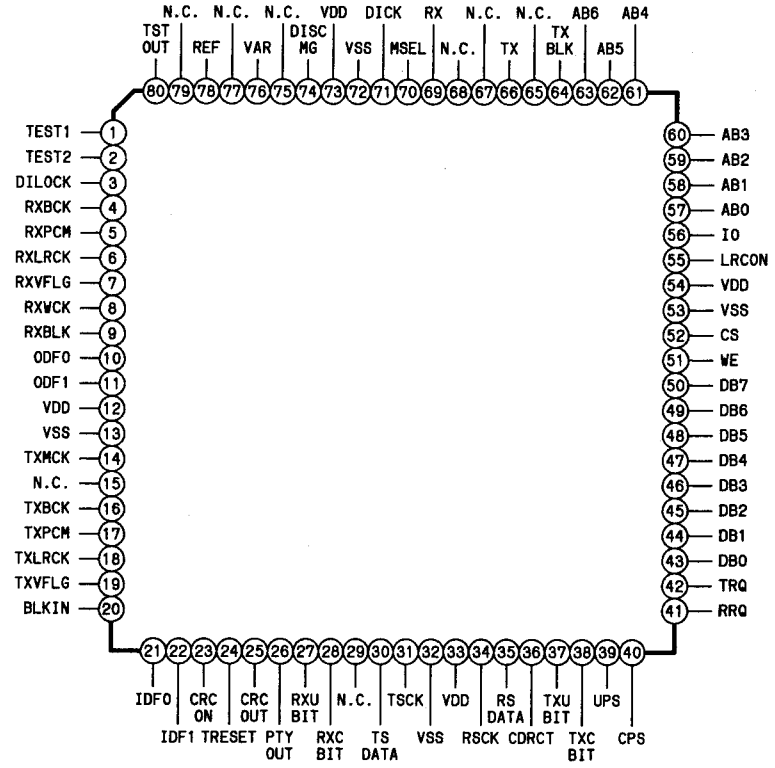

L7A0651

(80PIN QFP)

(TOP VIEW)

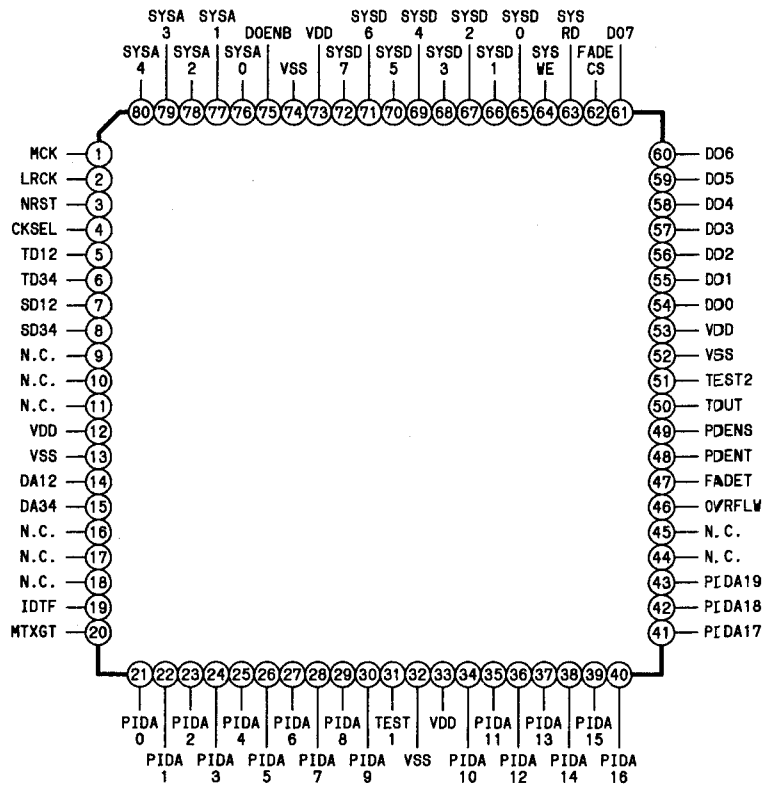

L7A0674 (PCM REC)
(160 PIN QFP)

(TOP VIEW)

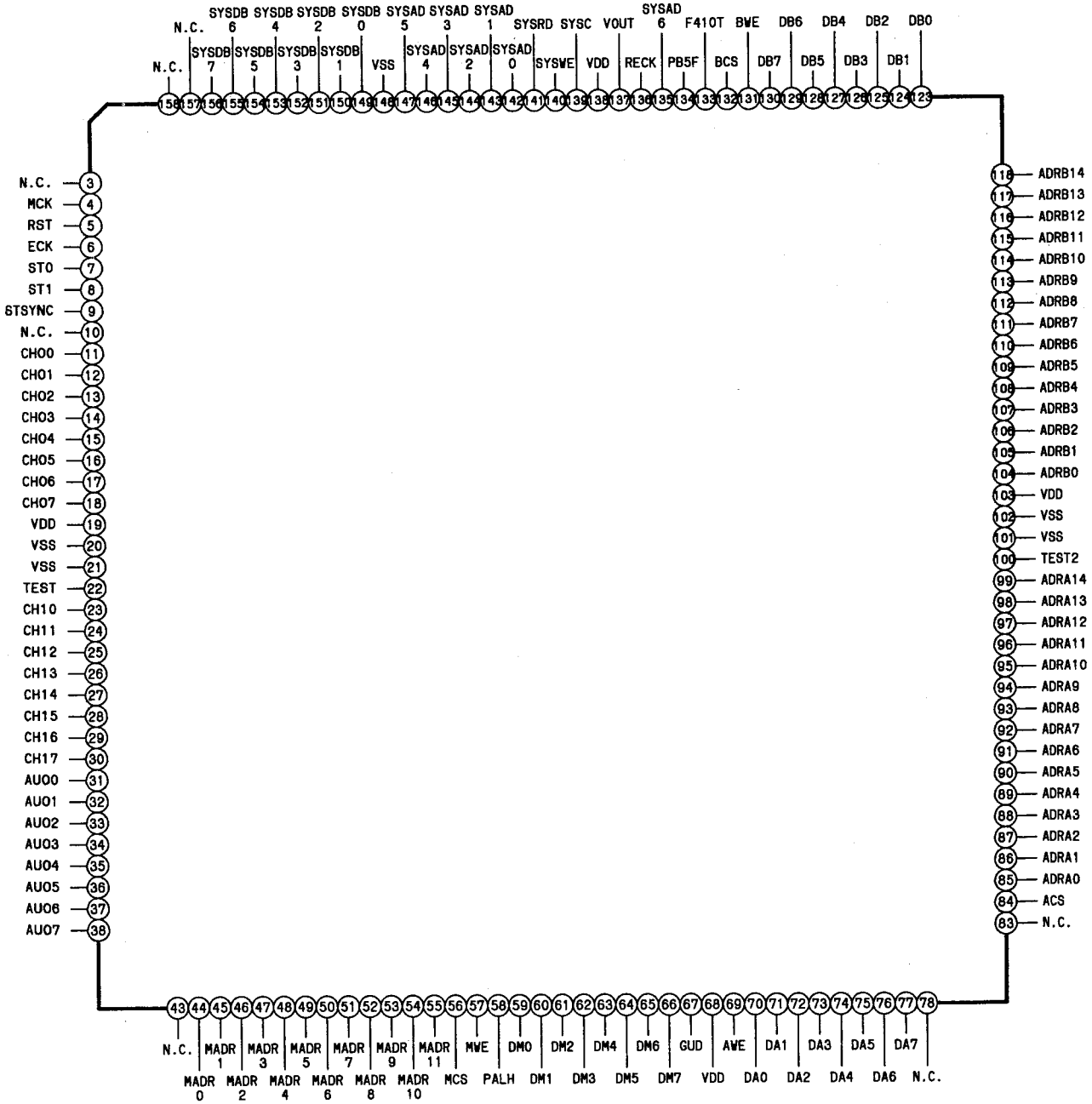

LM337

(BOTTOM VIEW)

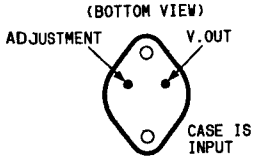

(FRONT VIEW)

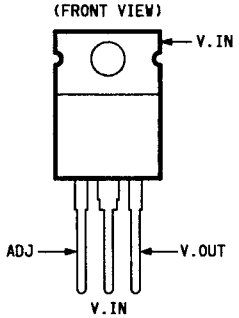

L7A0782 (AUDIO DESHUFFLE)

(TOP VIEW)

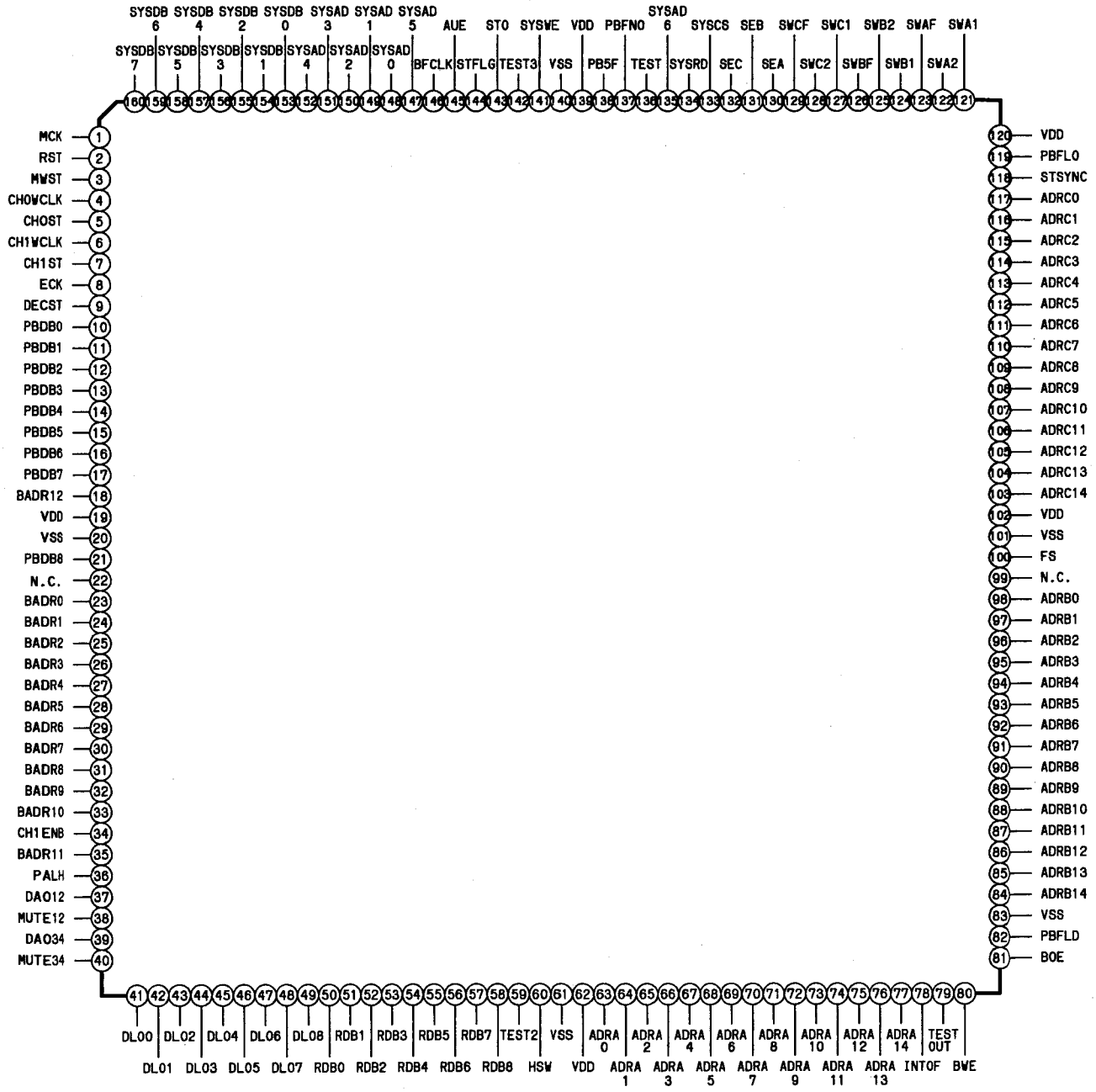

LM318N

(TOP VIEW)

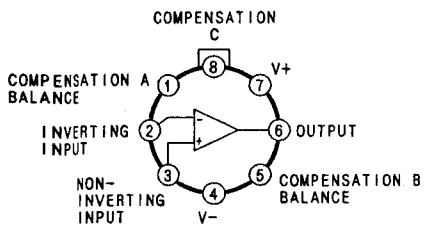

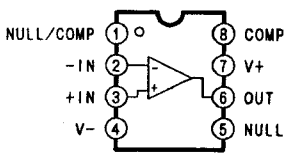

M5206P

(DUAL VCA FOR ELECTRONIC VOLUME)

(TOP VIEW)

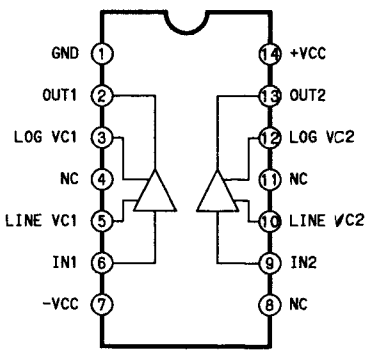

M5257J-35T4

(COMOS S-RAM)

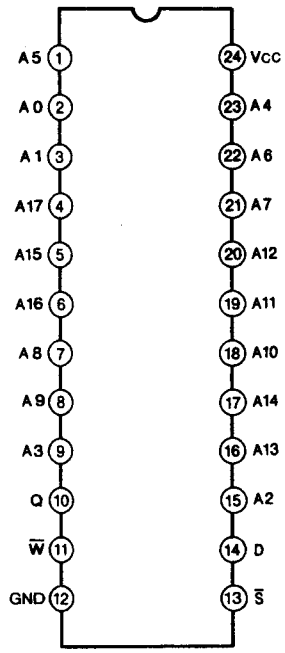

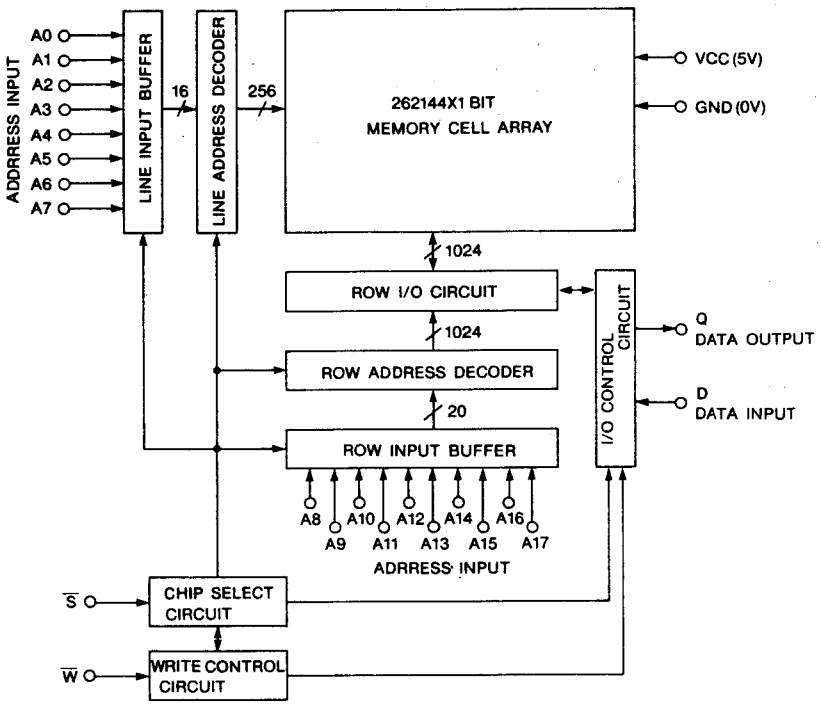

M5256BFP-70 (8-BIT RAM)

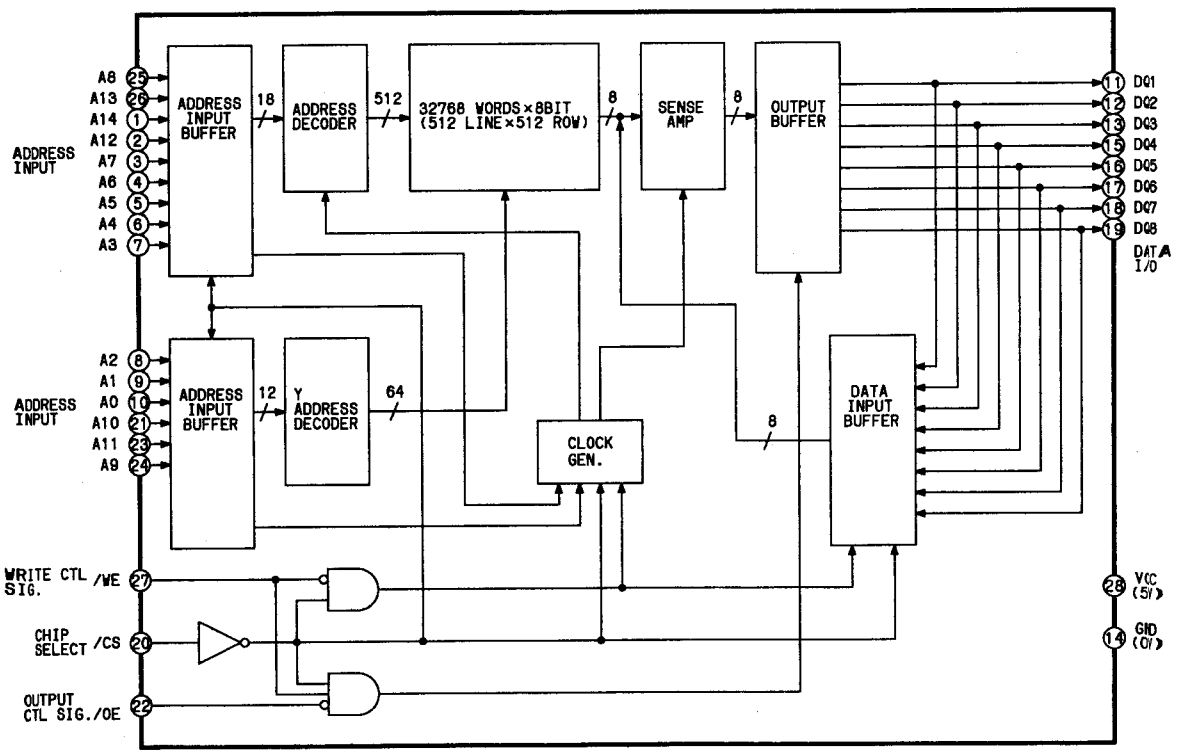

MB10HL107PFF
(TRIPLE EXCLUSIVE OR/ONR GATE)

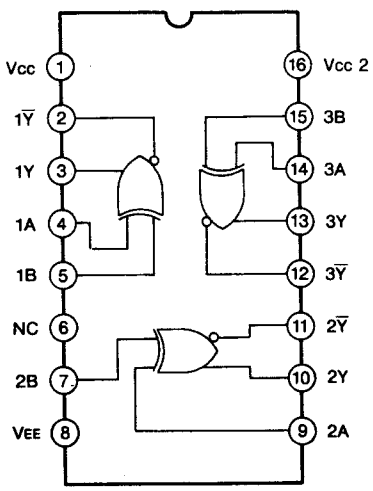

MB10HL116PFF
(TRIPLE LINE RECEIVER)

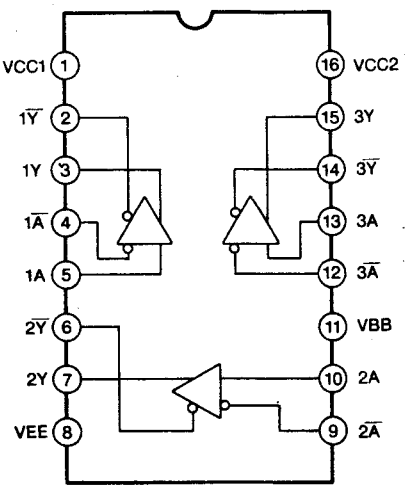

(TOP VIEW)

MB40778P
(8-BIT VIDEO A/D CONVERTER)

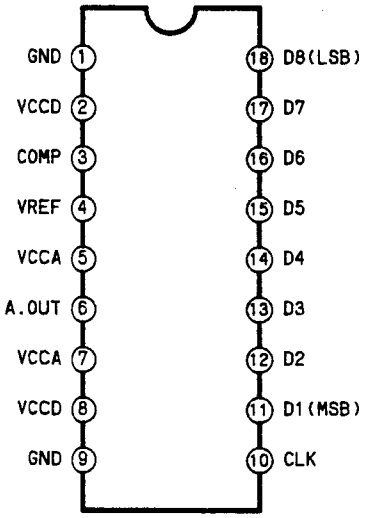

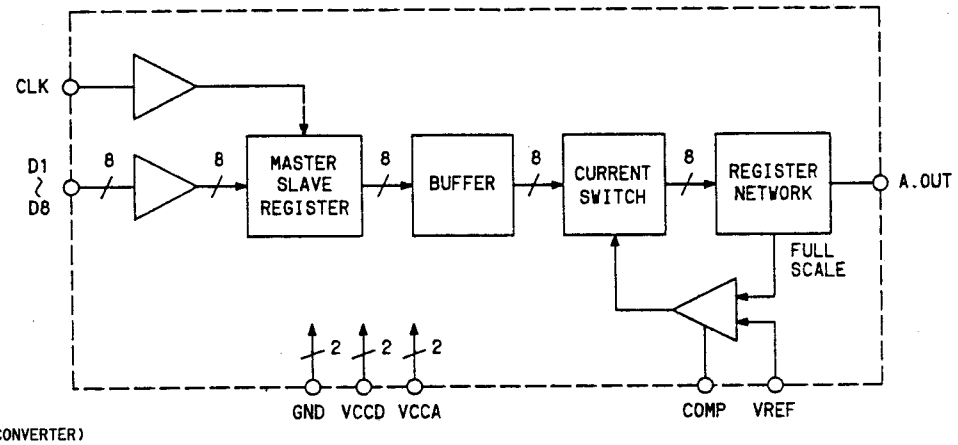

MB121M246 (PARALLEL SERIAL CONVERTER)
(BOTTOM VIEW)

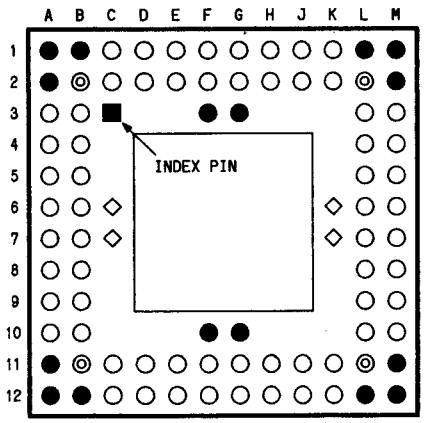

○ : SIGNAL PIN
● : GND
◇ : VEE = -5.2V
◎ : VCC = +5V

PIN NO.	I/O	PIN NAME	PIN NAME	PIN NO.	I/O	PIN NAME	PIN NAME
B10	B	BP01	AD1	F01	O	W21	A2WCLK
A10	B	BP00	AD0	E02	O	XW1	XAWCLK
B09	B	BP03	AD3	E01	O	W1	AWCLK
A09	B	BP02	AD2	D01	O	OCK1	ARECLK
A08	B	BP04	AD4	D02	O	XOK1	XARECLK
B08	B	BP05	AD5	C01	O	OS1	AREDATA
A07	B	BP06	AD6	C02	O	XOS1	XAREDATA
B07	I	ASYC	ASYIN	K11	I	XIS2	BPBDATA
B06	I	APS1	ASUPOS1	K12	I	IS2	XBPBDATA
A06	I	APS0	ASYPOS0	J11	-	IG01	IG01
B05	I	APS3	ASYPOS3	J12	-	IG02	IG02
A05	I	APS2	ASYPOS2	H12	I	CK2	BPBCLK
A04	O	SO1	ASTOUT	H11	I	XCK2	XBPBCLK
B04	O	XS01	XASYOUT	G12	I	RSET	RSET
A03	O	W2T1	A2WCLKT	G11	-	IG03	IG03
B03	O	WT1	AWCLKT	F11	-	IG04	IG04
K02	O	XOS2	BREDATA	F12	I	RECL	RECL
K01	O	OS2	XBREDATA	E11	I	XCK1	XAPBCLK
J02	O	XOK2	BRECLK	E12	I	CK1	APBCLK
J01	O	OCK2	XBRECLK	D12	-	IG05	IG05
H01	O	W2	BWCLK	D11	-	IG06	IG06
H02	O	XW2	XBWCLK	C12	I	IS1	APBDATA
G01	O	W22	B2WCLK	C11	I	XIS1	XAPBDATA
G02	O	XW22	XB2WCLK	L10	B	BP11	BD1
F02	O	XW21	XA2WCLK	M10	B	BP10	BD0
L09	B	BP13	BD3	M06	I	BPS0	BSYPOS0
M09	B	BP12	BD2	L05	I	BPS3	BSYPOS3
M08	B	BP14	BD4	M05	I	BPS2	BSYPOS2
L08	B	BP15	BD5	M04	O	SO2	BSYOUT
M07	B	BP16	BD6	L04	O	XSO2	XBSYOUT
L07	I	BSYC	BSYIN	M03	O	W2T2	B2WCLKT
L06	I	BPS1	BSYPOS1	L03	O	WT2	BWCLKT

MB620859PFV

(PCM DATA PIN ARRANGEMENT)

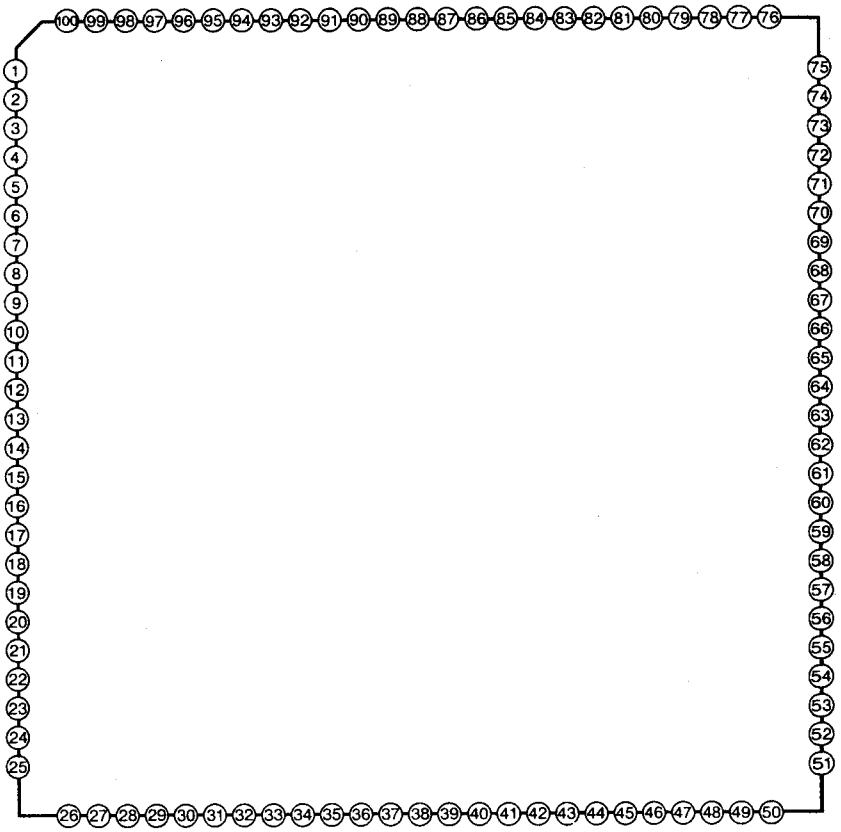

	DATA 1	DATA 2		DATA 1	DATA 2		DATA 1	DATA 2		DATA 1	DATA 2
1	CH0A_D0	PB_D0	26	CH1A_D4	ECC_D4	51	EPPLOT	SWA2_N	76	TEST2	MB_D7
2	CH0A_D1	PB_D1	27	CH1A_D5	ECC_D5	52	BUFF_D0	MA_D0	77	RSRVD3	MB_D8
3	VDD	VDD	28	VDD	VDD	53	VDD	VDD	78	VDD	VDD
4	VSS	VSS	29	VSS	VSS	54	VSS	VSS	79	VSS	VSS
5	CH0A_D2	PB_D2	30	CH1A_D6	ECC_D6	55	BUFF_D1	MA_D1	80	TEST3	SWB1_N
6	CH0A_D3	PB_D3	31	CH1A_D7	ECC_D7	56	BUFF_D2	MA_D2	81	GATELN	SWB2_N
7	CH0A_D4	PB_D4	32	CH1A_D8	ECC_D8	57	BUFF_D3	MA_D3	82	BFLCK	SWBF_N
8	CH0A_D5	PB_D5	33	PBD0	RD_D0	58	BUFF_D4	MA_D4	83	BOE	SWC1_N
9	CH0A_D6	PB_D6	34	PBD1	RD_D1	59	BUFF_D5	MA_D5	84	BWE	SWC2_N
10	CH0A_D7	PB_D7	35	PBD2	RD_D2	60	BUFF_D6	MA_D6	85	FLB0	SWCF_N
11	CH0A_D8	PB_D8	36	PBD3	RD_D3	61	BUFF_D7	MA_D7	86	PBFLD	RSRVD12
12	CH0END_N	RSRVD1	37	PBD4	RD_D4	62	BUFF_D8	MA_D8	87	CLK_LN1	FS256DIN
13	CH1END_N	RSRVD2	38	PBD5	RD_D5	63	AWE_N	AWE_N	88	FS256IN	RSRVD13
14	CH0CST	RSRVD3	39	PBD6	RD_D6	64	BWE_N	BWE_N	89	OE	OE
15	VSS	VSS	40	VSS	VSS	65	VSS	VSS	90	VSS	VSS
16	FV2	RSRVD4	41	PBD7	RD_D7	66	CWE_N	CWE_N	91	MODE_SEL	MODE_SEL
17	FS	RSRVD5	42	PBD8	RD_D8	67	TEST_D4	TEST_D4	92	CLK_OUT1	MC_D0
18	EE_PB	RSRVD6	43	SEL0	RSRVDL0	68	BP_N	BP_N	93	CLK_OUT2	MC_D1
19	AREC	RSRVD7	44	SEL1	RSRVDL1	69	RSRVD1	MB_D0	94	FS256D	MC_D2
20	JVSHT	RSRVD8	45	SEL2	SEA_N	70	RSRVD2	MB_D1	95	FS128	MC_D3
21	NTSC_1	RSRVD9	46	SEL3	SEB_N	71	CH0ST	MB_D2	96	FS64	MC_D4
22	CH1A_D0	ECC_D0	47	SEL4	SEC_N	72	CH1ENDO	MB_D3	97	FS32	MC_D5
23	CH1A_D1	ECC_D1	48	DECST	SWAL_N	73	PBRST	MB_D4	98	FS	MC_D6
24	CH1A_D2	ECC_D2	49	CLRN	CLRN	74	PBGATE	MB_D5	99	RSRVD4	MC_D7
25	CH1A_D3	ECC_D3	50	TEST4	SWAF_N	75	TEST1	MB_D6	100	RSRVD5	MC_D8

MB813AZ (LATCH)

(TOP VIEW)

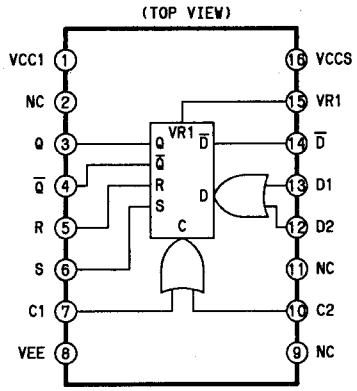

INPUT				OUTPUT	
SET S	RESET R	CLOCK C	DATA D	Q	Q̄
H	H	X	X	*	*
H	L	X	X	H	L
L	H	X	X	L	H
L	L	↑	H	H	L
L	L	↑	L	L	H
L	L	L	X	Q0	Q0

MB81C78A35PF (8K MEMORY)

(TOP VIEW)

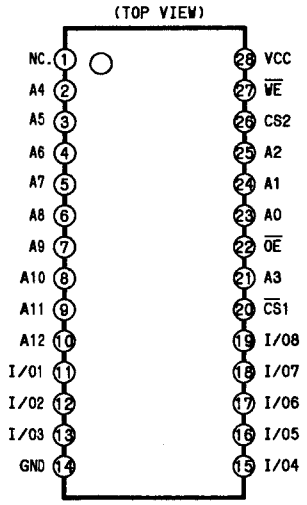

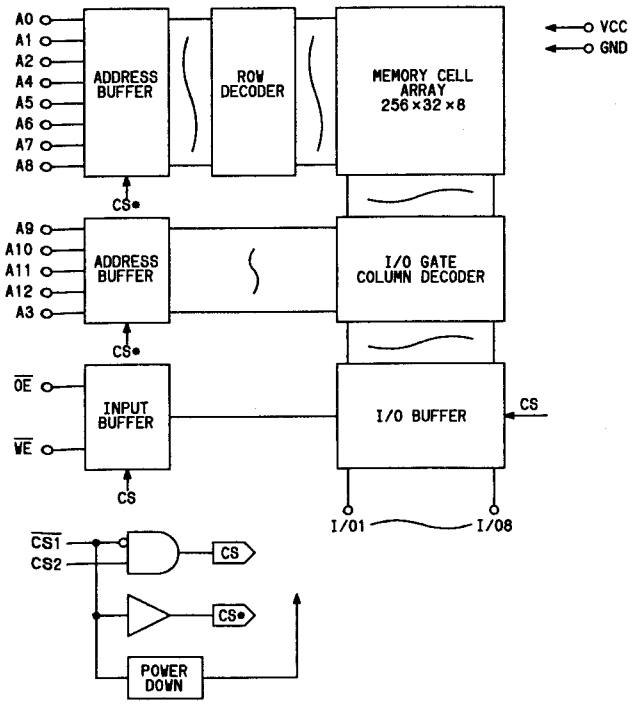

MB81C79A35PF (8K MEMORY)

(TOP VIEW)

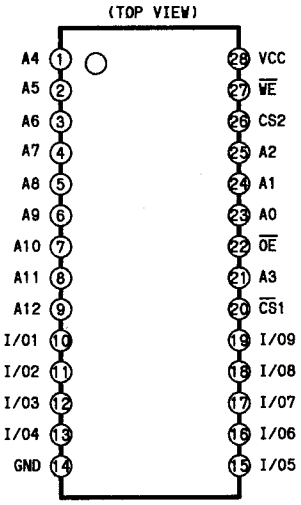

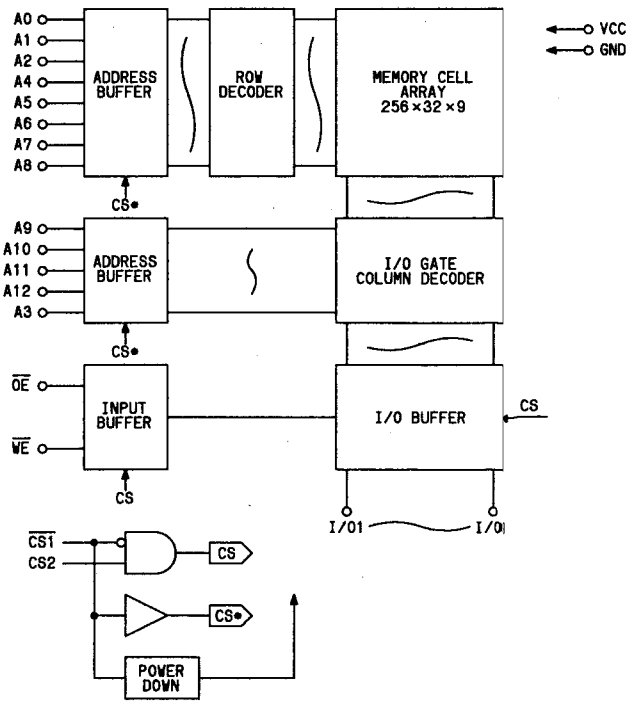

MB8289-25PF

(288K BIT S-RAM)

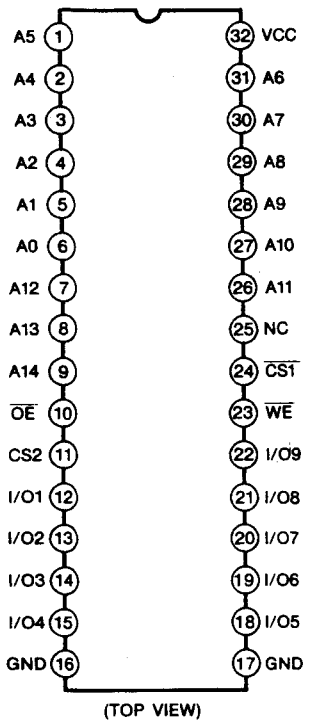

(TOP VIEW)

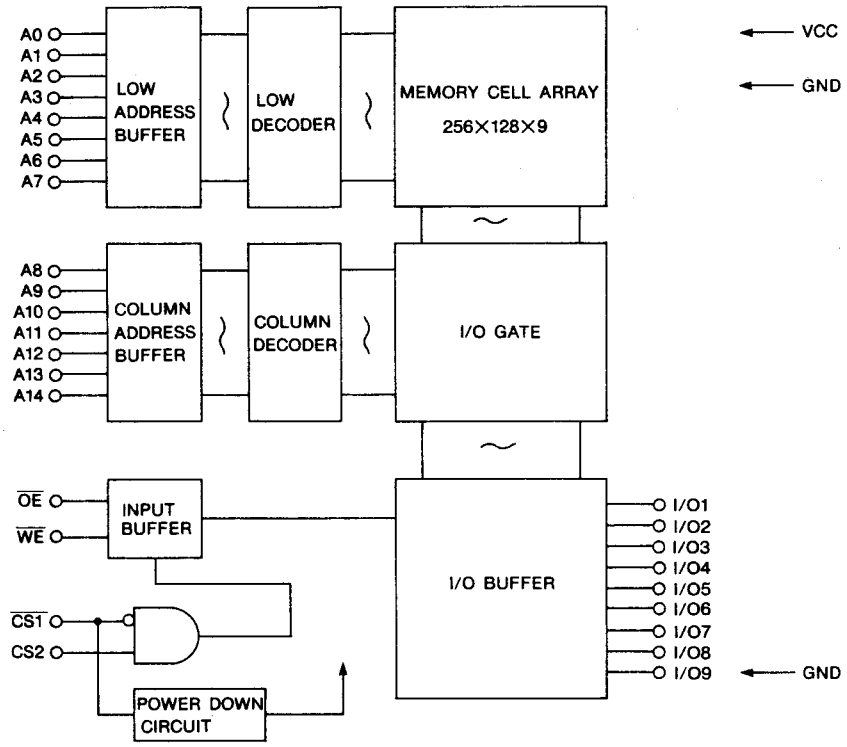

MB8421-90LPF

(16K BIT DUAL PORT STATIC RAM)

(TOP VIEW)

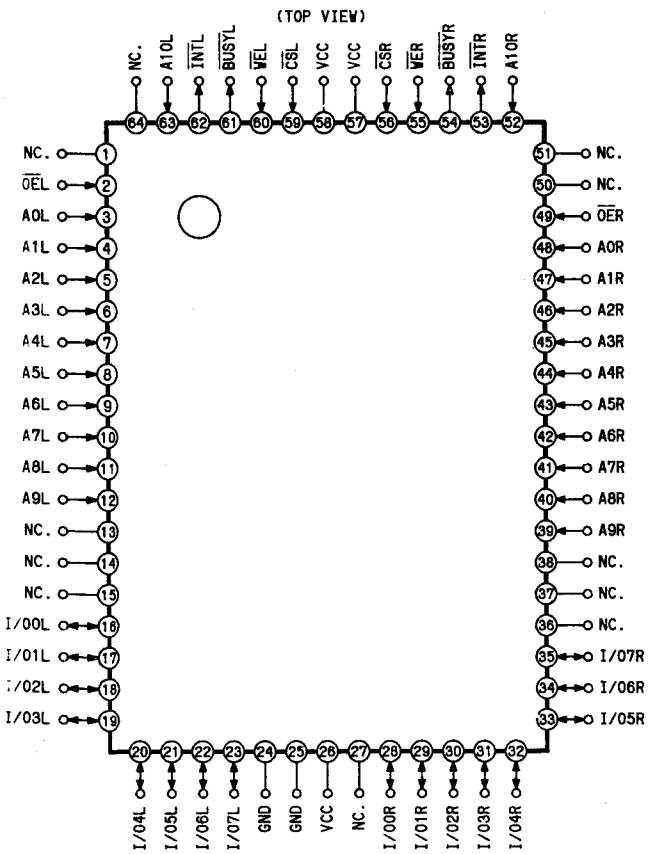

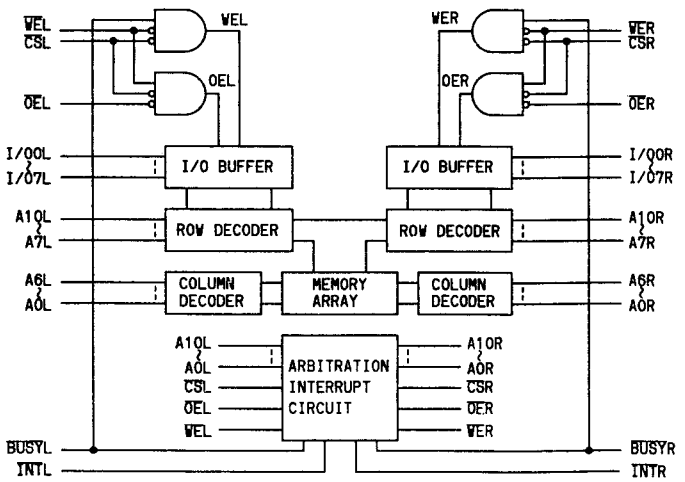

MB88346

8BITS D/A CONVERTER WITH OUTPUT AMP

(TOP VIEW)

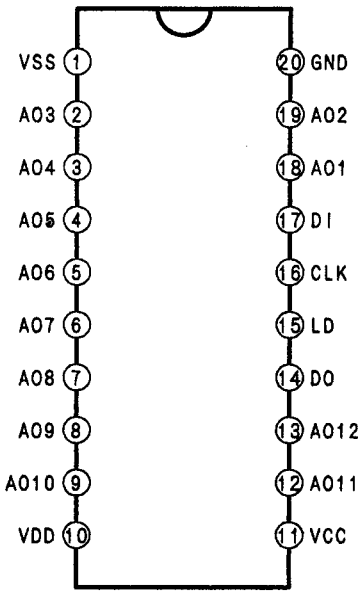

(TOP VIEW)

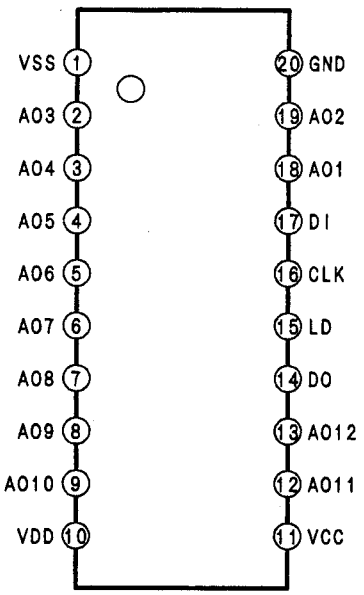

MC10H102

(QUAD 2-INPUT NOR GATE)

(TOP VIEW)

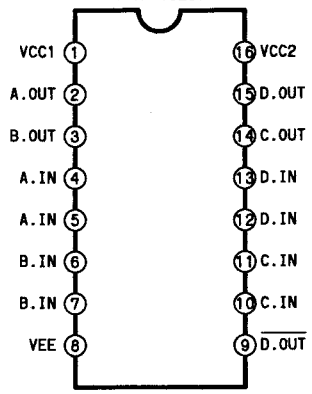

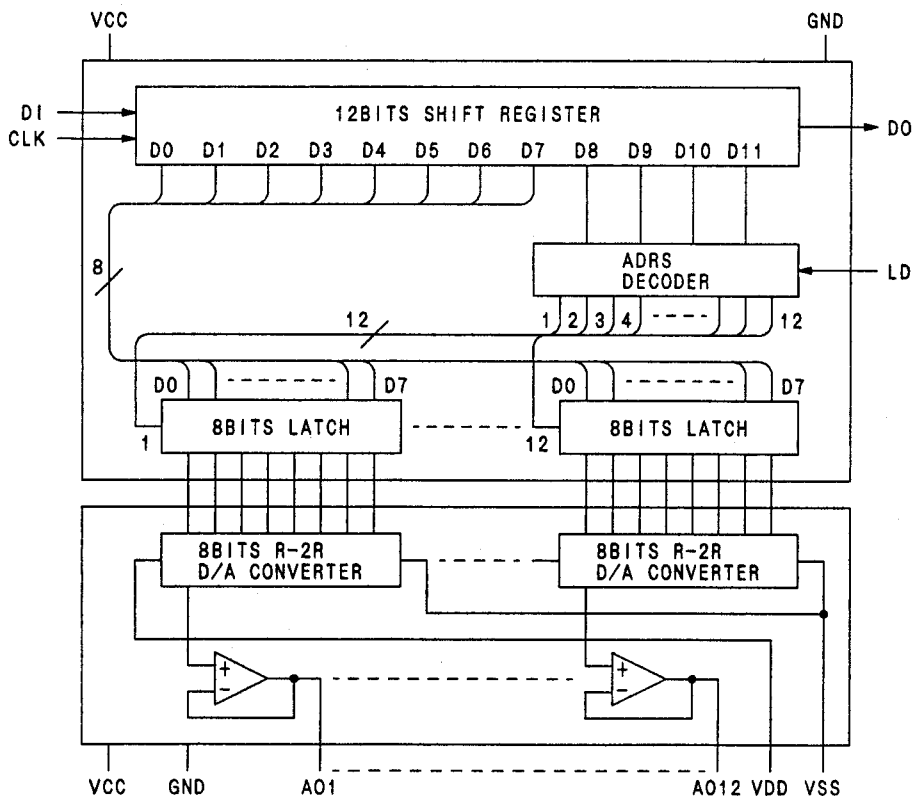

MC10H116

(TRIPLE LINE RECEIVER)

(TOP VIEW)

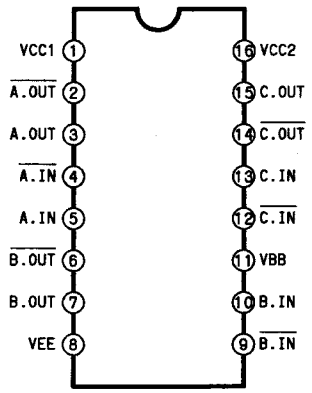

LOGIC DIAGRAM

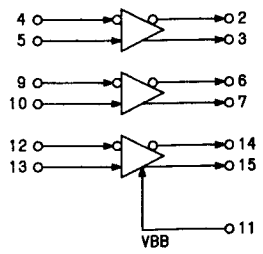

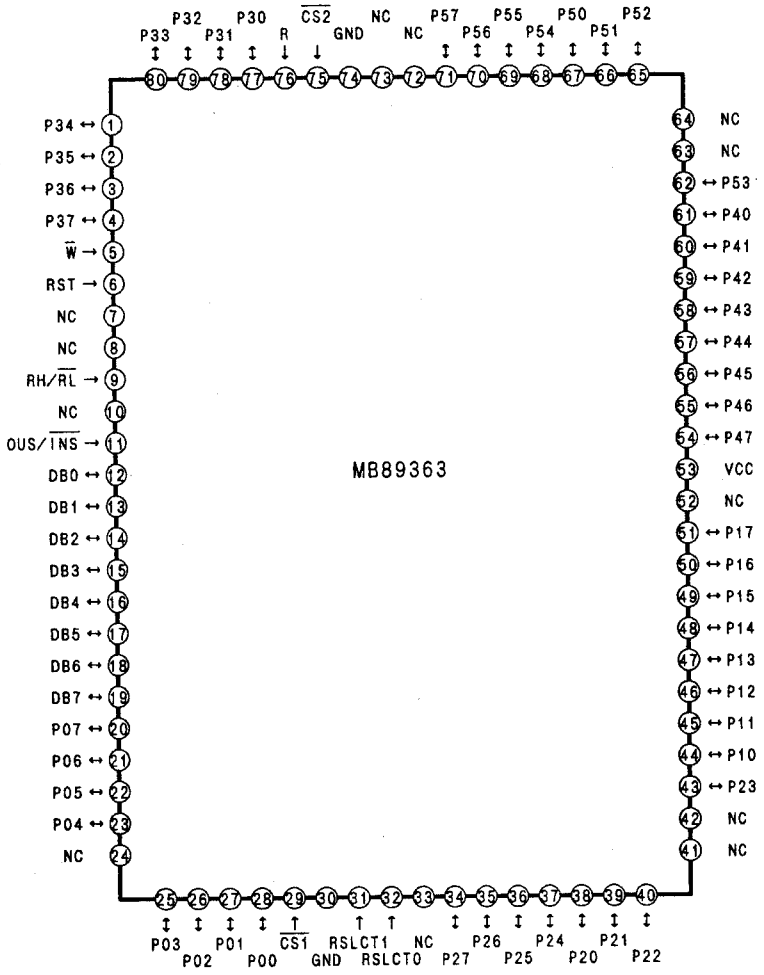

MB89363
(PROGRAMMABLE PERIPHERAL INTERFACE)
(TOP VIEW)

MC10124
(QUAD TTL TO MECL TRANSLATOR)
(TOP VIEW)

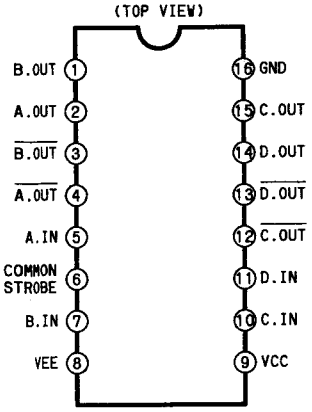

LOGIC DIAGRAM

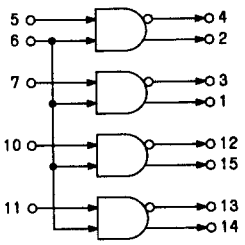

BLOCK DIAGRAM

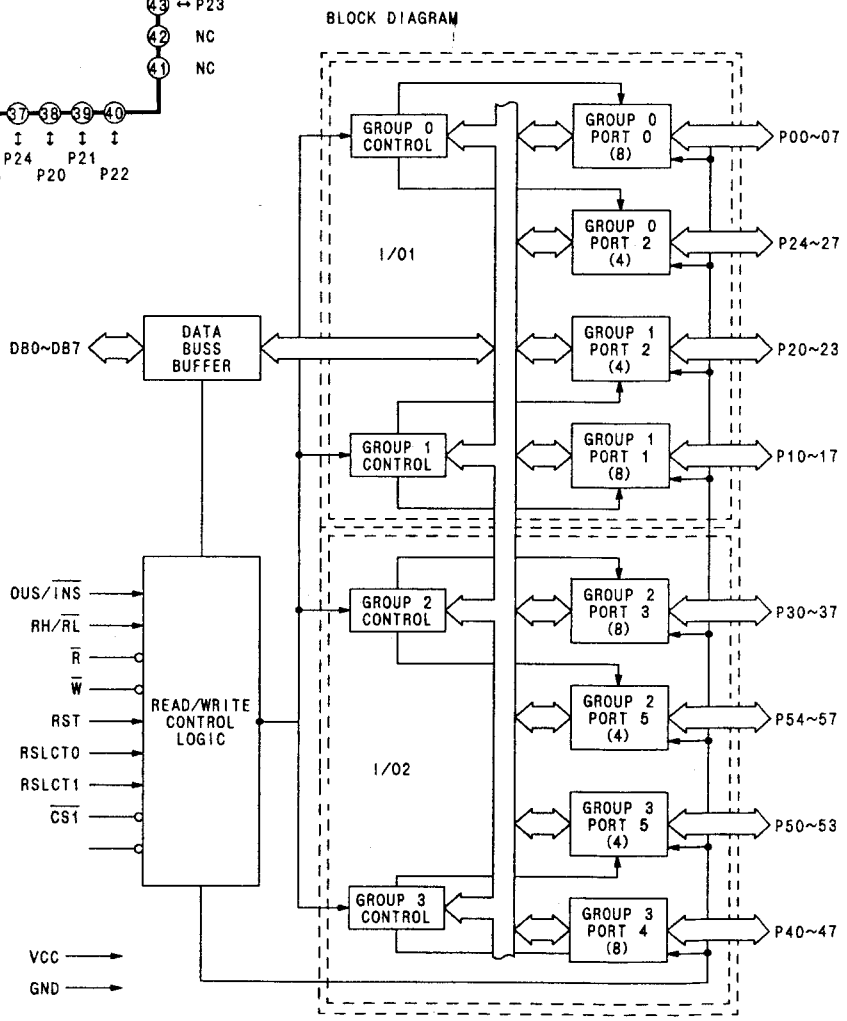

MC10H176
(HEX "D" MASTER-SLAVE FLIP-FLOP)

LOGIC DIAGRAM

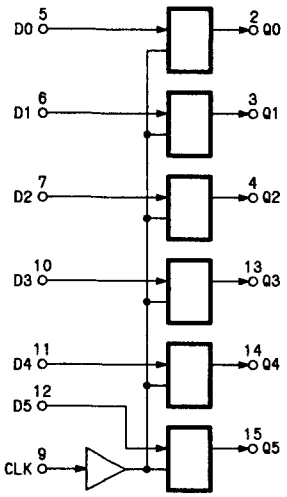

VCC1-PIN1
VCC2-PIN16
VEE-PIN8

MC1495L
(ANALYSIS AND BASIC OPERATION)

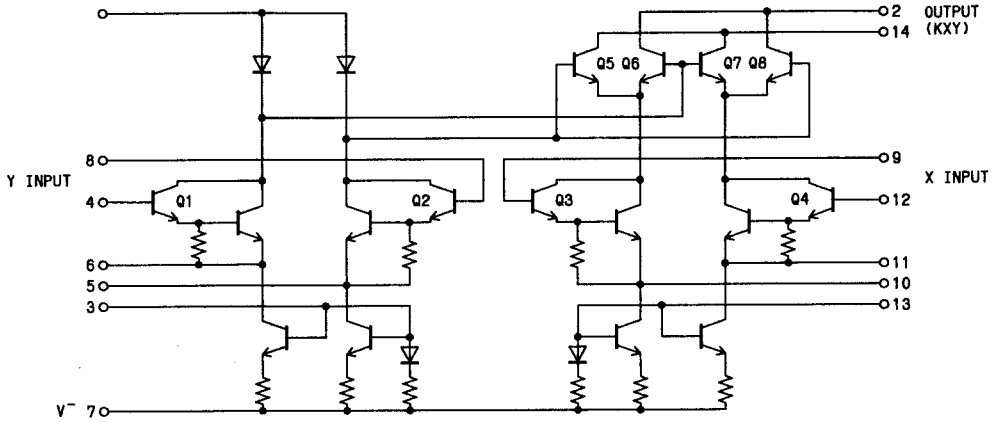

MC4044

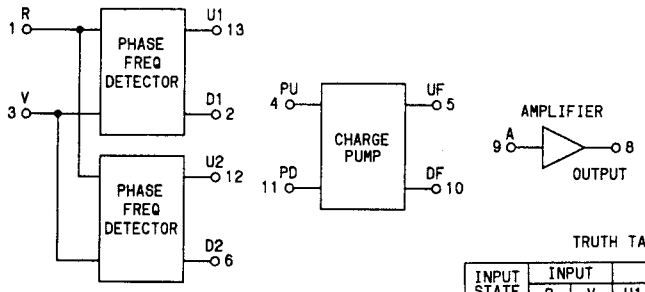

TRUTH TABLE

INPUT STATE	INPUT		OUTPUT			
	R	V	U1	D1	U2	D2
1	0	0	×	×	1	1
2	1	0	×	×	0	1
3	1	1	×	×	1	0
4	1	0	×	×	0	1
5	0	0	×	×	1	1
6	1	0	×	×	0	1
7	0	0	×	×	1	1
8	1	0	×	×	0	1
9	0	0	0	1	1	1
10	0	1	0	1	1	1
11	0	0	1	1	1	1
12	0	1	1	1	1	1
13	0	0	1	0	1	1
14	0	1	1	0	1	1
15	0	0	1	0	1	1
16	1	0	1	0	0	1
17	0	0	1	1	1	1

MN51040
(TIME CODE GENERATOR/READER)

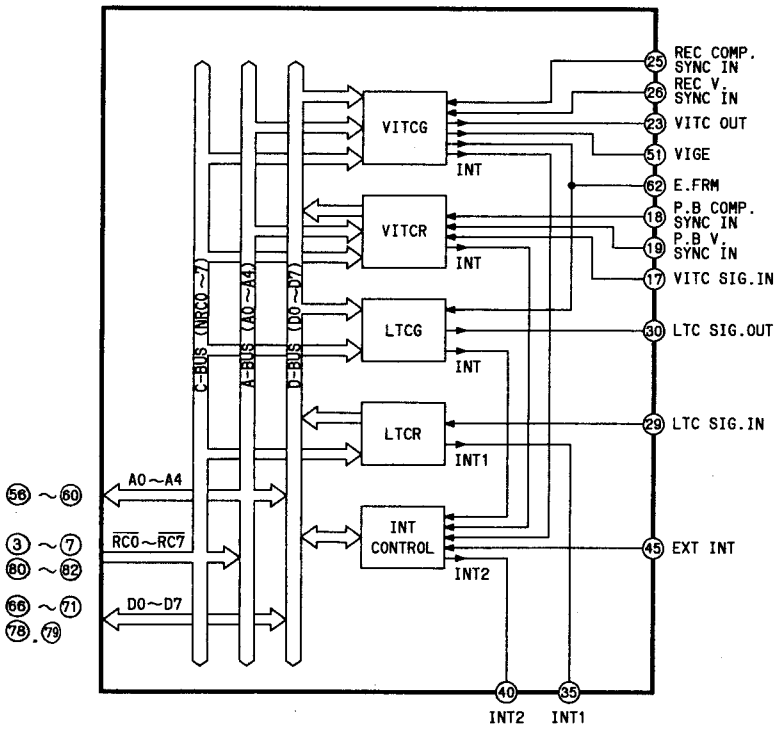

MC34051
(DUAL RS-422/423 TRANSCEIVER)

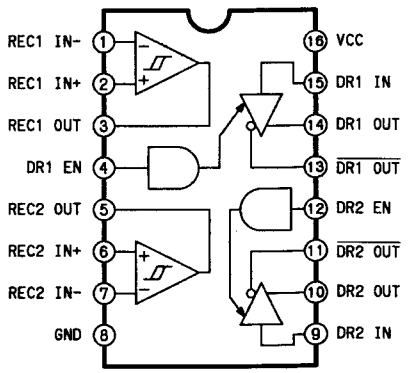

MN53040VPQ (SELECTOR FOR A/D CONVERTER)

(TOP VIEW)

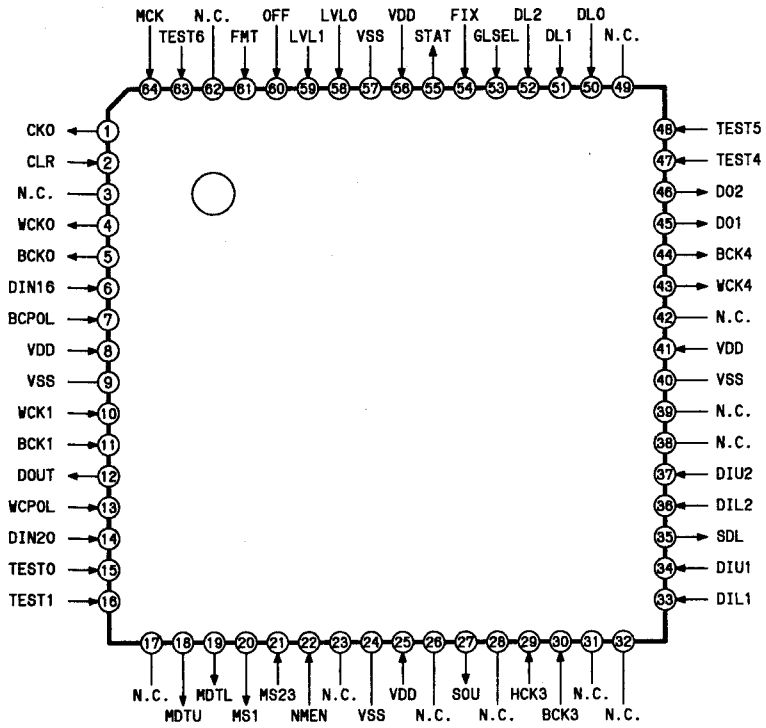

MN6631

(5-CHANNEL CMOS ELECTRONIC SWITCH)

(TOP VIEW)

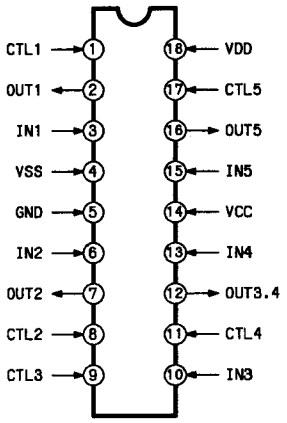

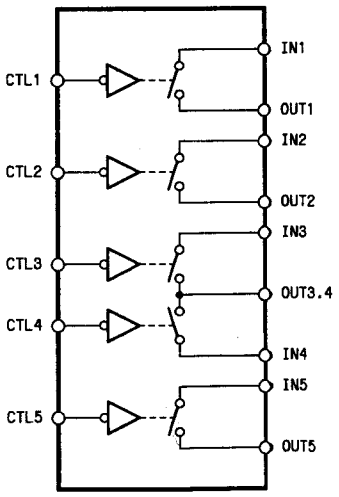

FUNCTION TABLE

INPUT	SWITCH
L	ON
H	OFF

MN8305S (INTERPOLATION FOR JOG)

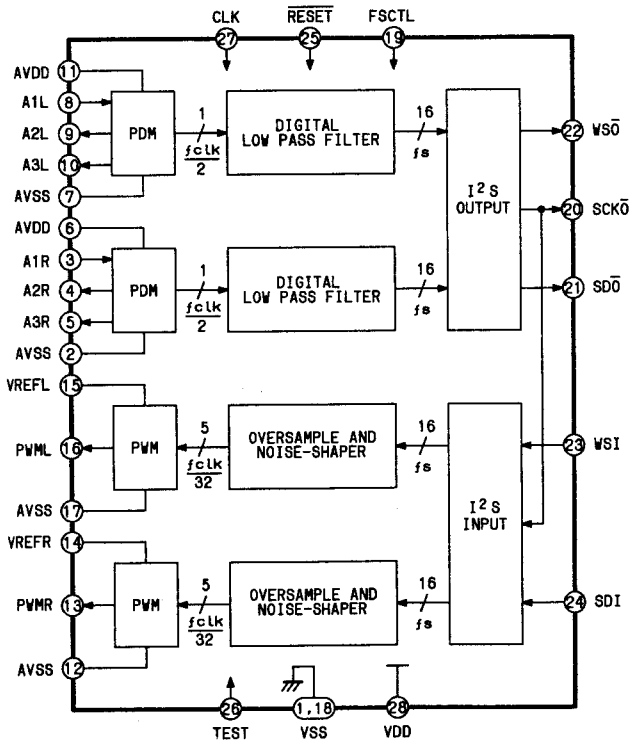

NE521
(HIGH SPEED DUAL DIFFERENTIAL COMPARATOR)

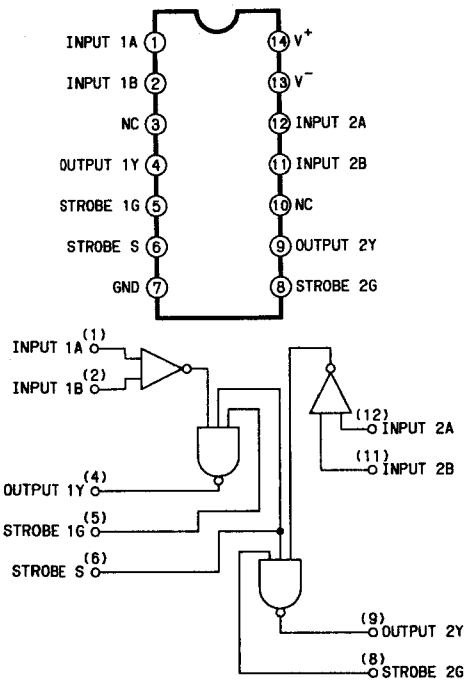

NJM082BM
(OPERATIONAL AMPLIFIER)

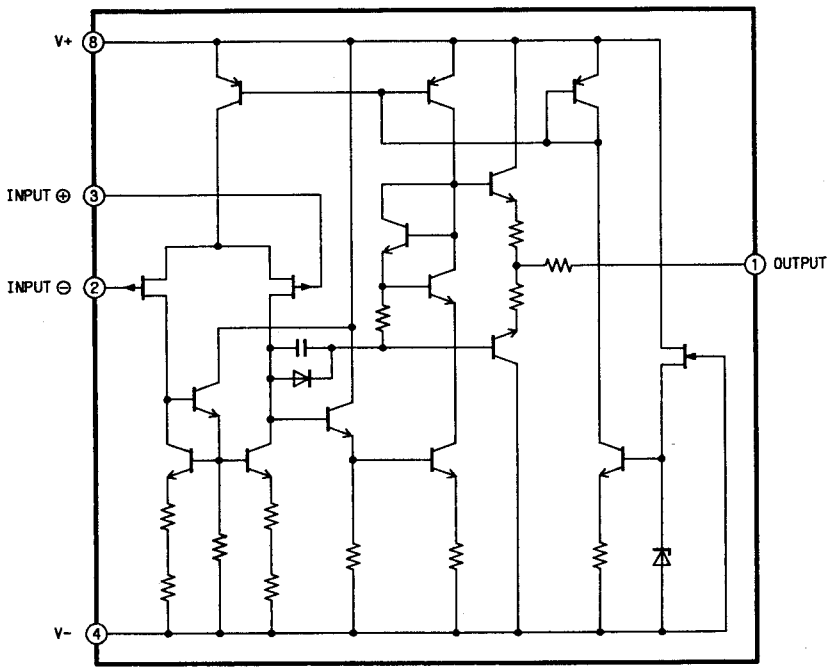

NJM084
(QUAD J-FET INPUT OPERATINAL AMPLIFIER)

(TOP VIEW)

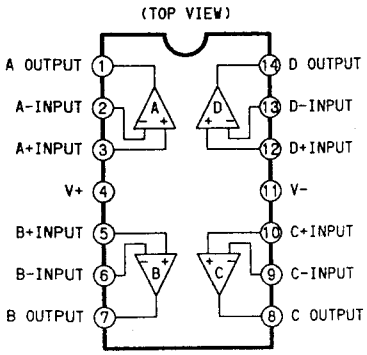

NJM1496
(BALANCED MODULATOR/DEMODULATOR)

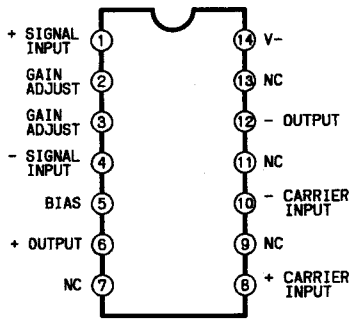

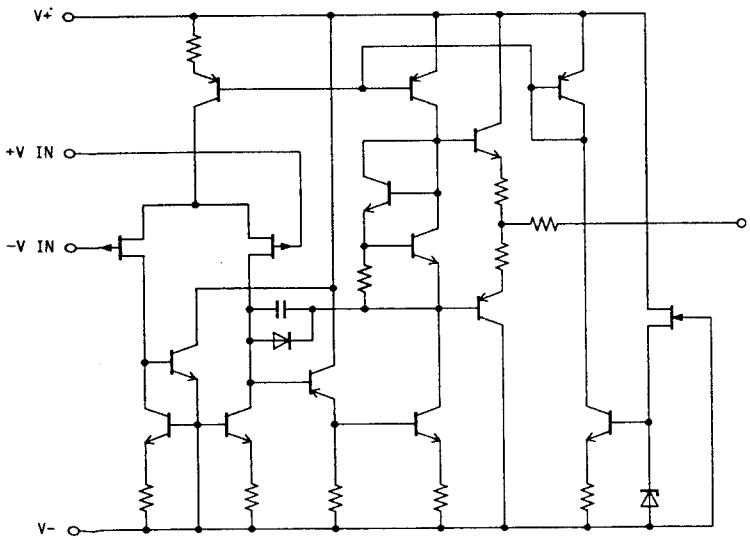

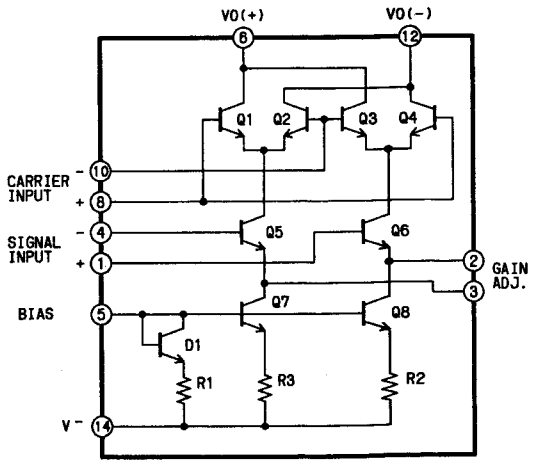

NJM2068MD

(OPERATIONAL AMPLIFIER)

(TOP VIEW)

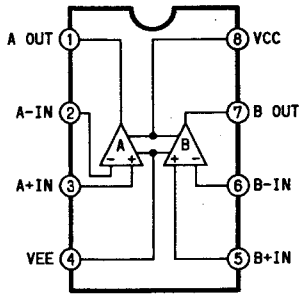

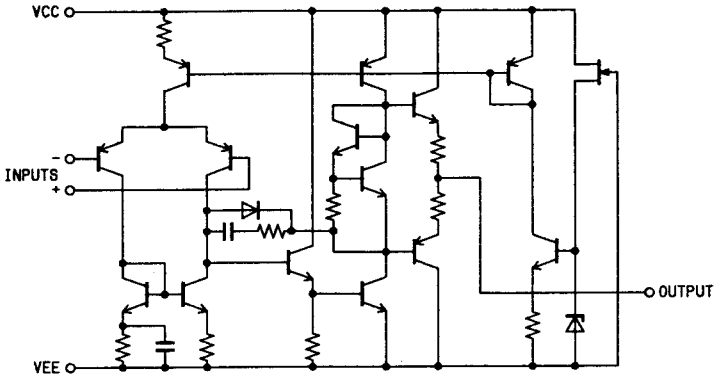

NJM2901

(QUAD VOLTAGE COMPARATOR)

(TOP VIEW)

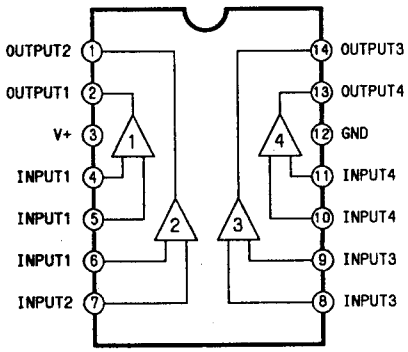

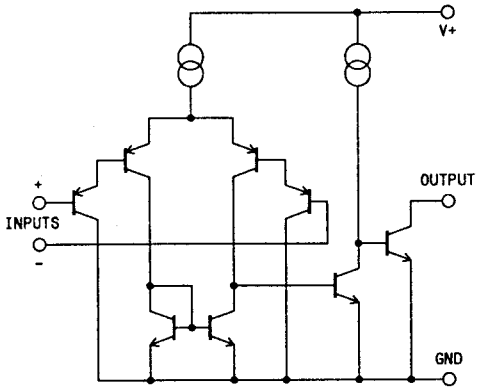

NJM2903M

(VOLTAGE CONPARATOR)

(TOP VIEW)

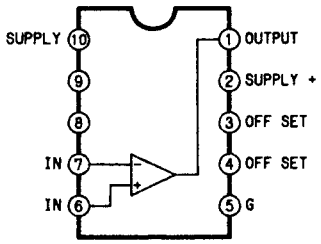

NJM2904M

(DUAL SIGNAL SUPPLY OPERATIONAL AMPLIFIER)

(TOP VIEW)

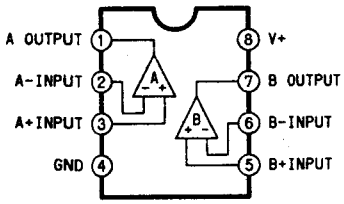

NJM319M

(DUAL VOLTAGE COMPARATOR)

(TOP VIEW)

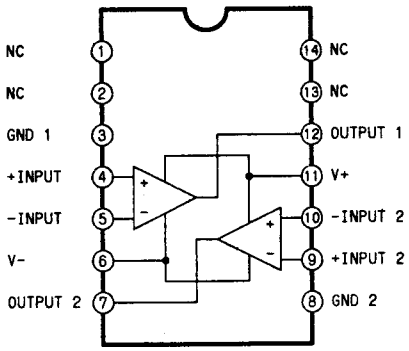

NJM360M

(OP AMP)

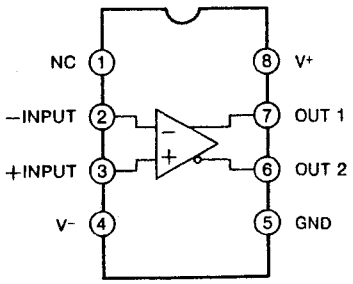

NJM4558

(OPERATIONAL AMPLIFIER)

(TOP VIEW)

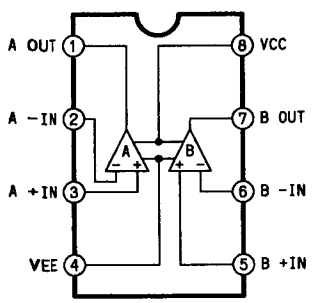

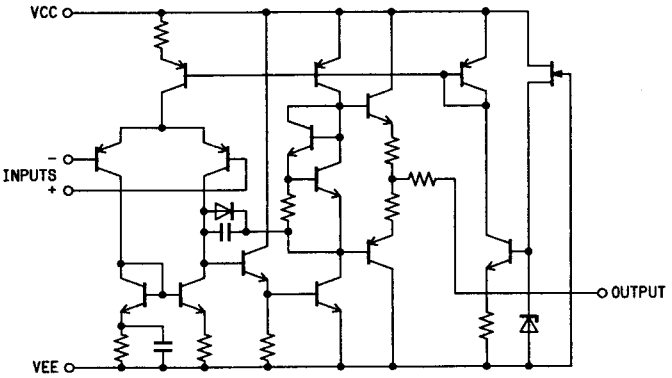

NJM4580ED

(DUAL OP AMP)

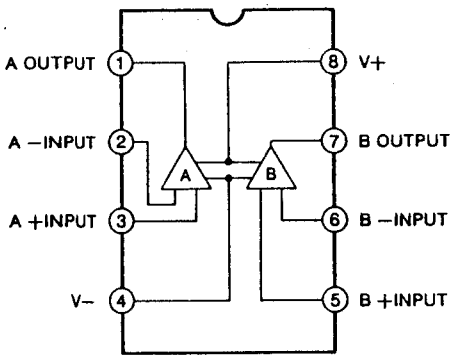

SN75158

(TOP VIEW)

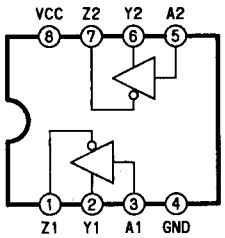

NJM4556MB

(OPERATIONAL AMPLIFIER)

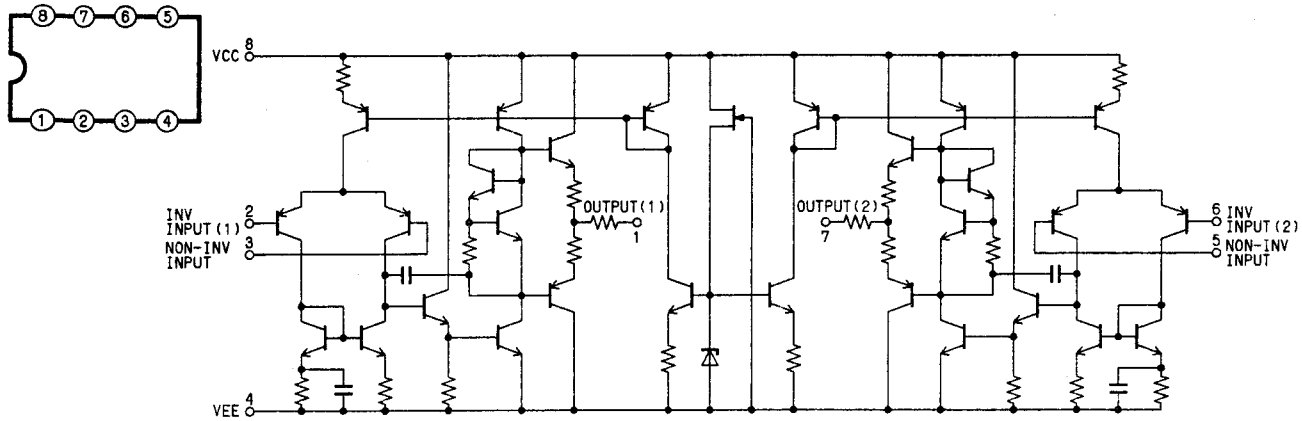

PU4124

(POWER AMP)

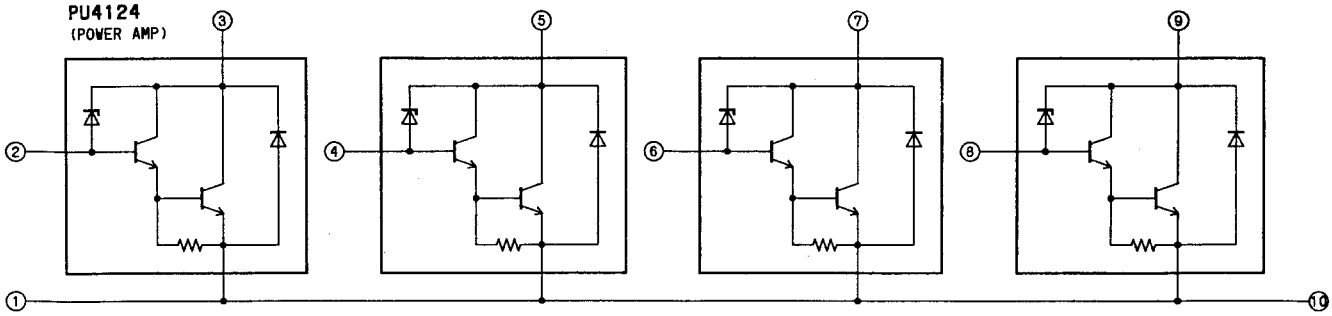

S81250HG

(C-MOS VOLTAGE REGULATOR)

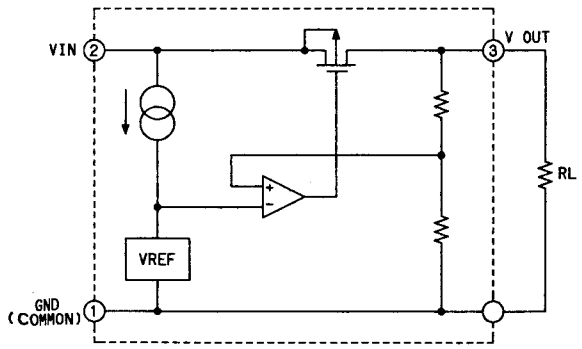

S-80230AG

(C-MOS VOLTAGE REGULATOR)

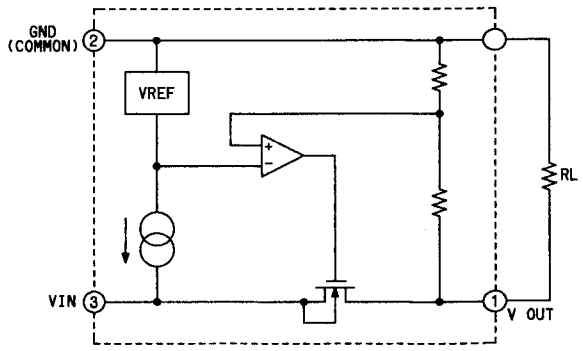

SN74S1051NS
(DIODE ARRAY)

(TOP VIEW)

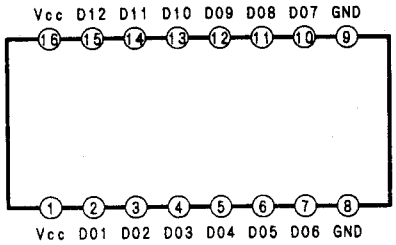

(BLOCK DIAGRAM)

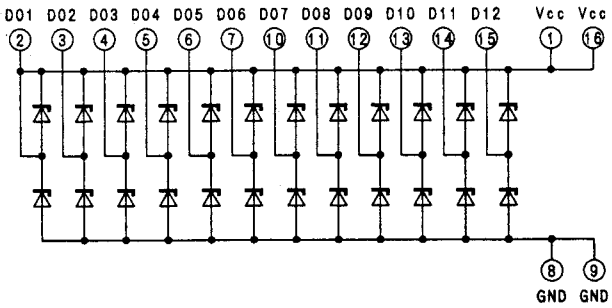

STV1602A
(SERIAL INTERFACE TRANSMISSTION DECODER)

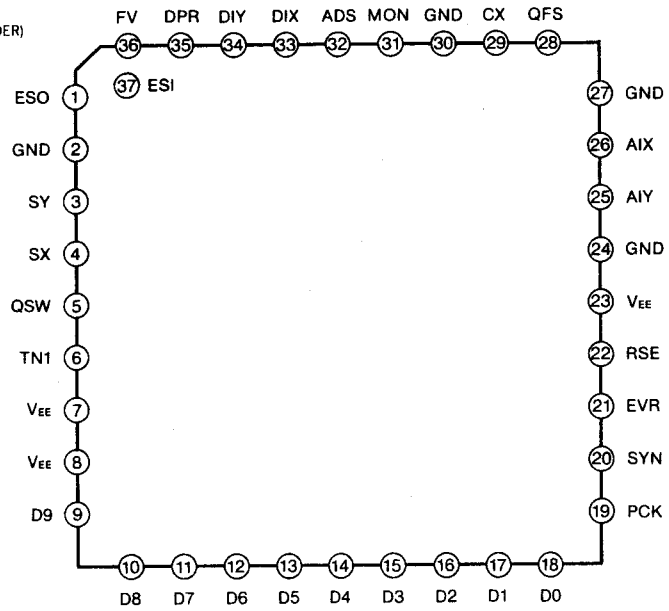

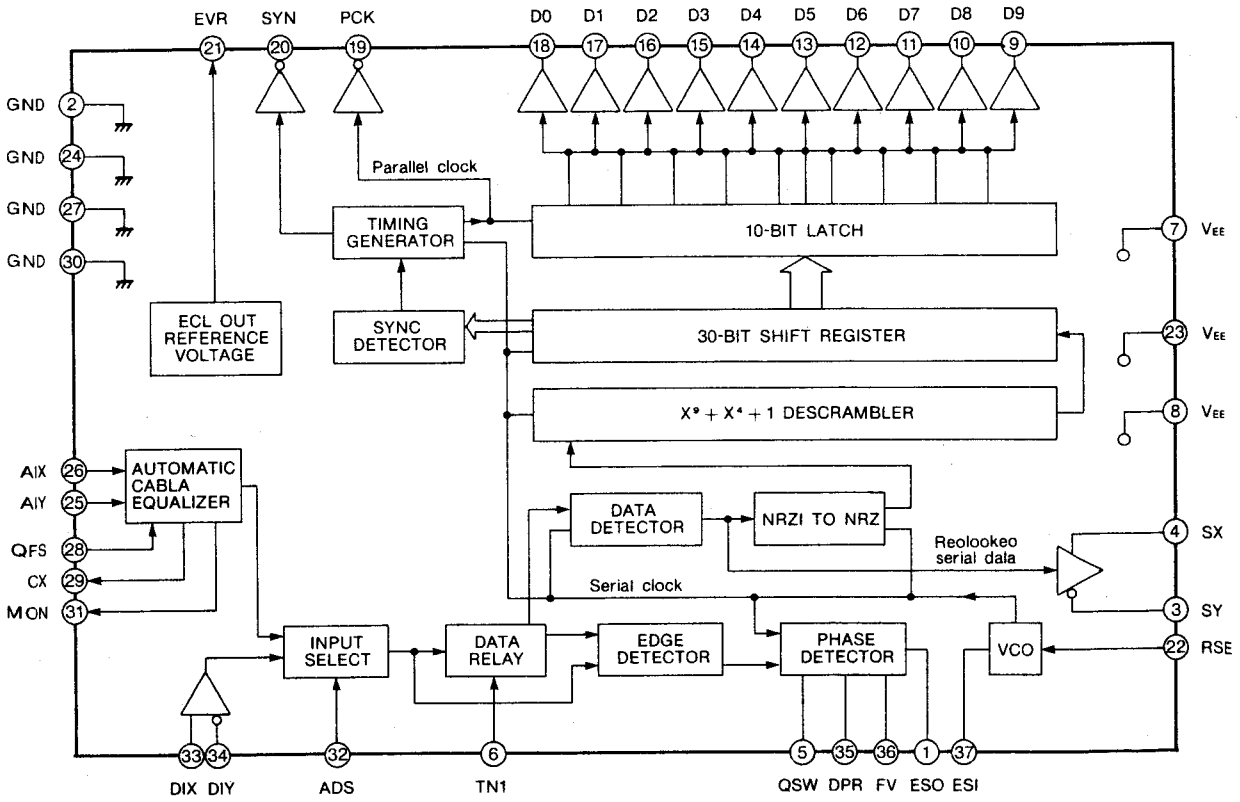

TC4S30F
(EXCLUSIVE-OR GATE)

(TOP VIEW)

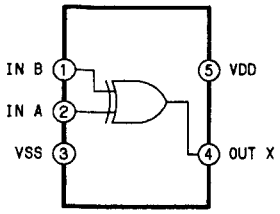

TRUTH TABLE

INPUT		OUTPUT
A	B	X
L	L	L
L	H	H
H	L	H
H	H	L

TC4S66F
(BILATERAL SWITCH)

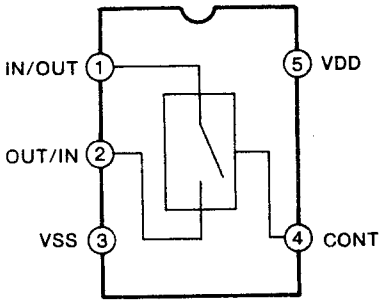

TC7S04F
(C-MOS INVERTER)

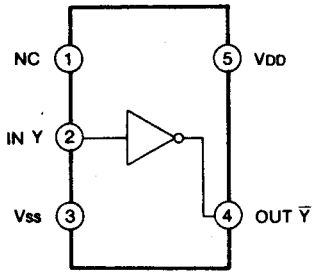

TL431CLP
(ADJUSTABLE PRECISION SHUNT REGULATOR)

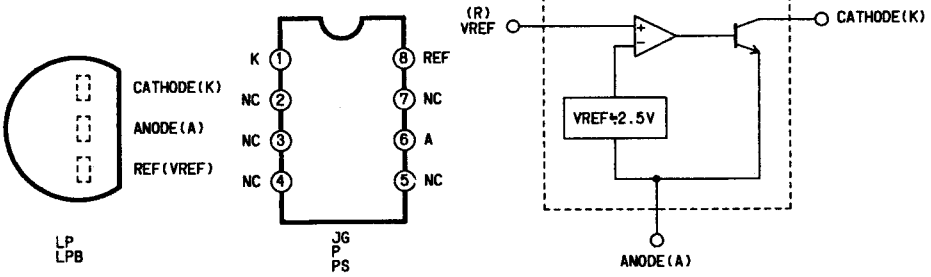

TL082
(OPERATIONAL AMPLIFIER)

(TOP VIEW)

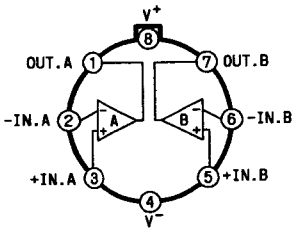

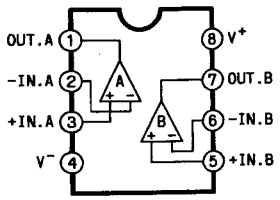

TL7705
(SUPPLY VOLTAGE SUPERVISOR CIRCUIT)

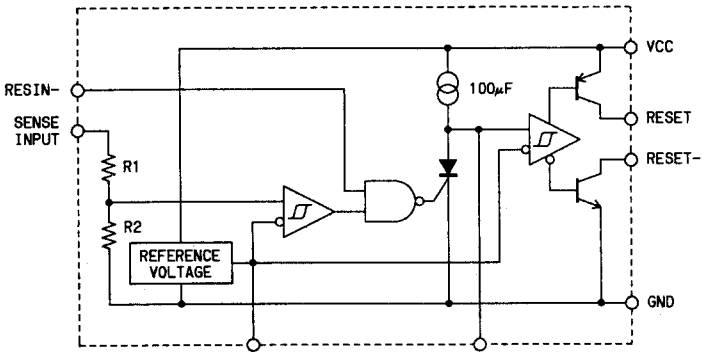

TL084
(OPERATIONAL AMPLIFIER)

(TOP VIEW)

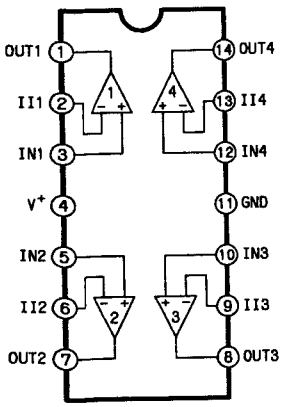

TMP82C55AF2
(CMOS PROGRAMMABLE PERIPHERAL INTERFACE)

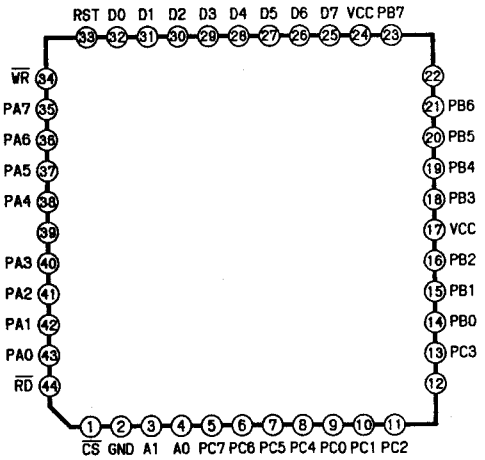

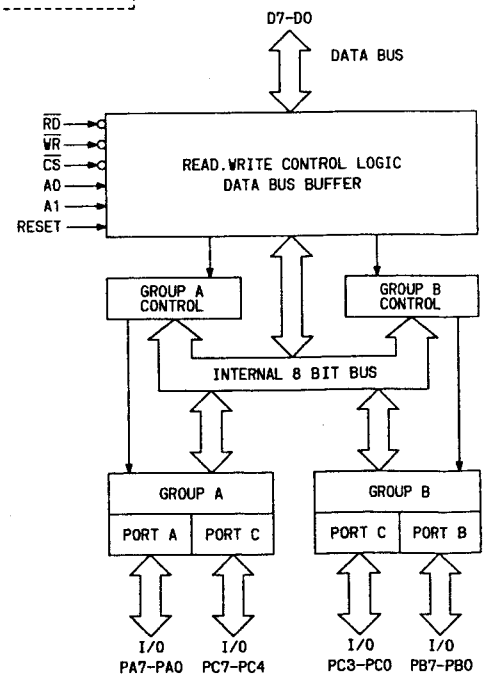

TMP82C79F2
(CMOS PROGRAMMABLE KEYBOARD/DISPLAY INTERFACE)

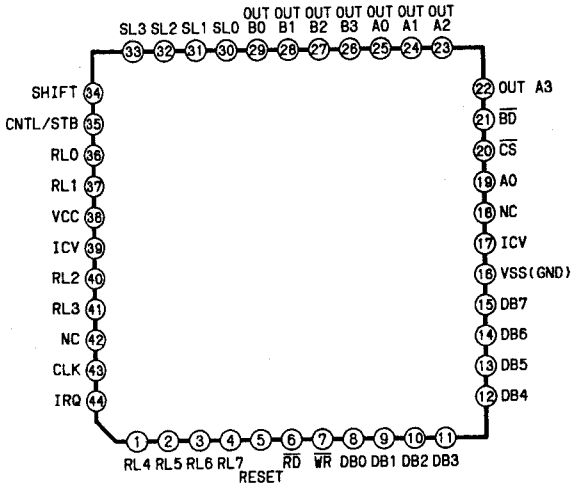

μPC1663

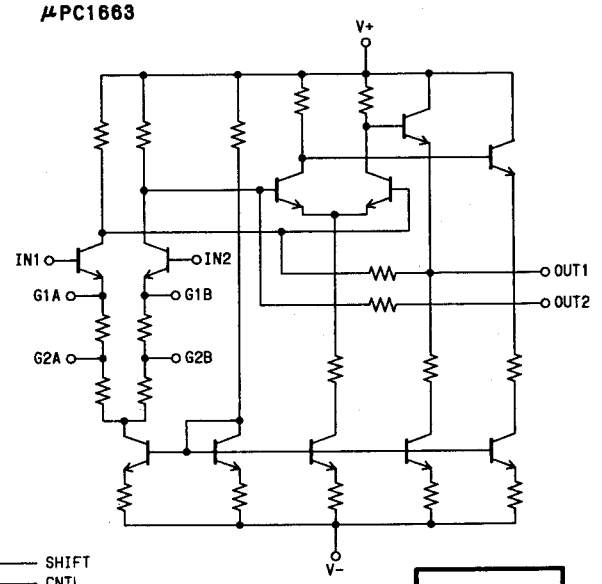

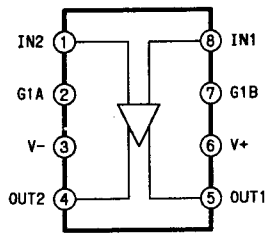

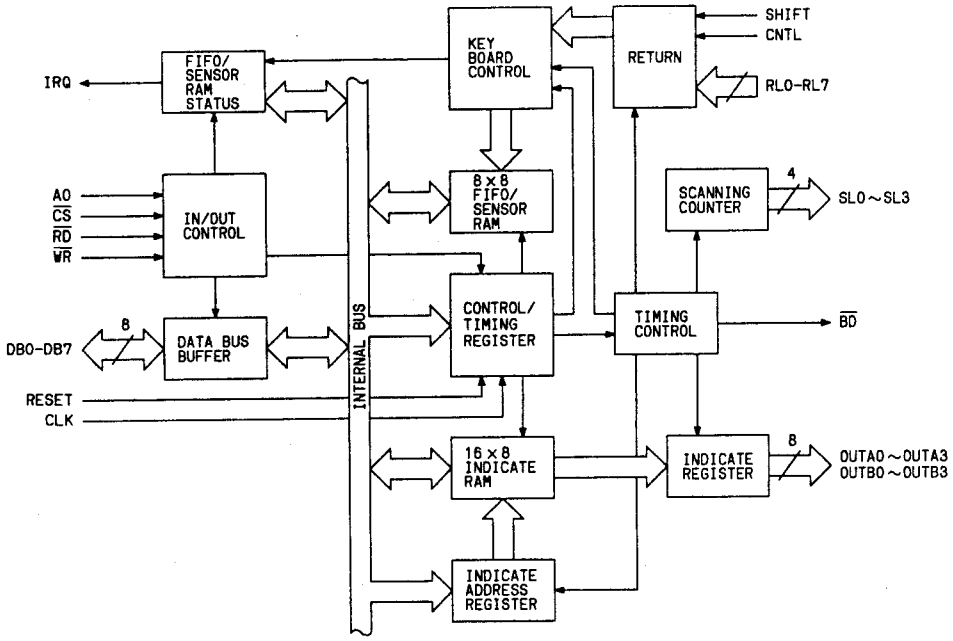

UPC319
(DUAL COMPARATOR)
(TOP VIEW)

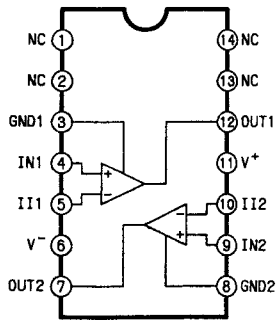

TMPZ84C43AF6
(SERIAL INPUT/OUTPUT CONTROLLER)

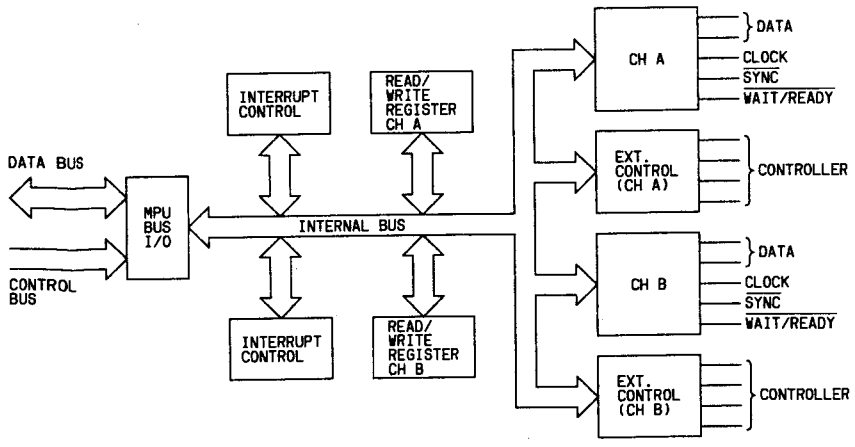

UPC339
(OPERATIONAL AMPLIFIER)
(TOP VIEW)

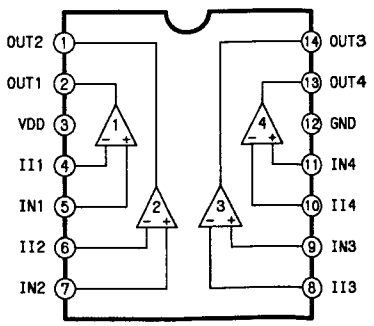

μPC4074

(TOP VIEW)

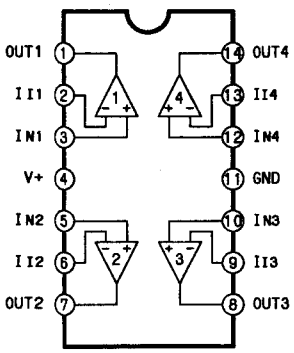

EQUIVALENT CIRCUIT (1/4)

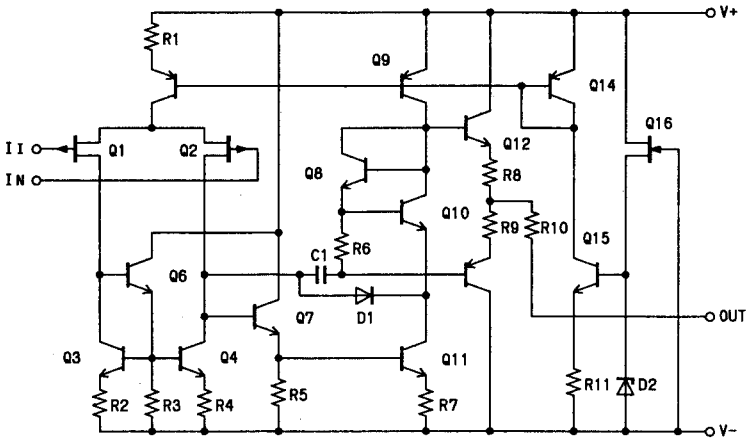

UPC4082

(OPERATIONAL AMPLIFIER)

(TOP VIEW)

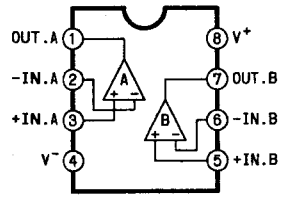

UPC4741

(OPERATIONAL AMPLIFIER)

(TOP VIEW)

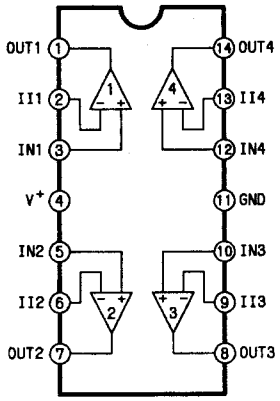

μPC4946

(SWITCHING REGULATOR CONTROL)

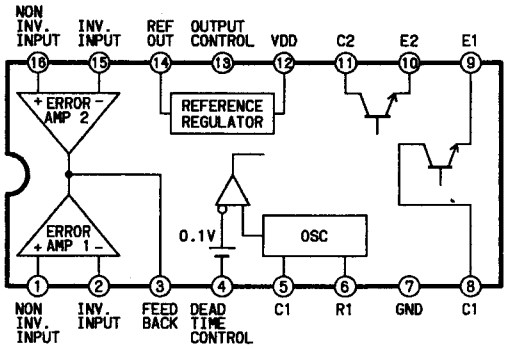

UPC451

(HIGH PERFORMANCE QUADRUPLE OPERATIONAL AMPLIFIER)

(TOP VIEW)

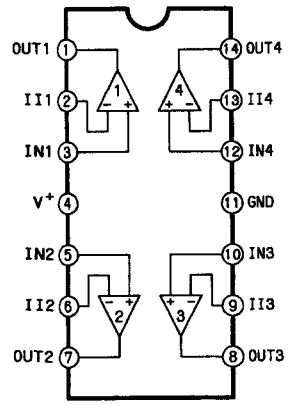

UPC4558

(OPERATIONAL AMPLIFIER)

(TOP VIEW)

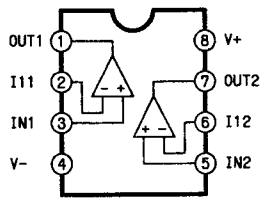

μPC624C

(18-PIN HERMETIC DIP)

(TOP VIEW)

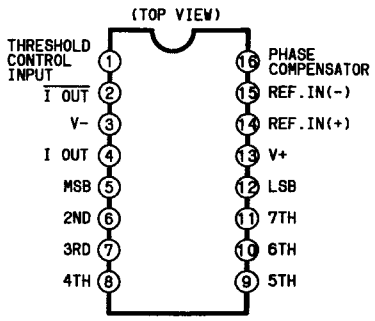

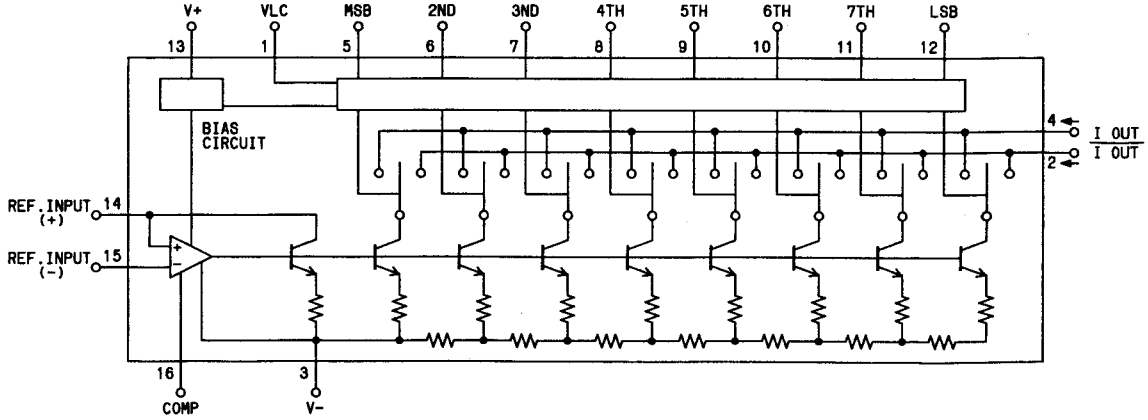

μPD42101G (FIFO 1H DELAY)

(TOP VIEW)

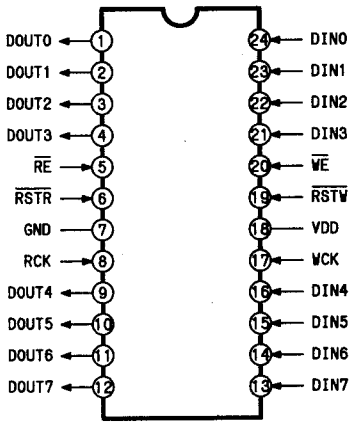

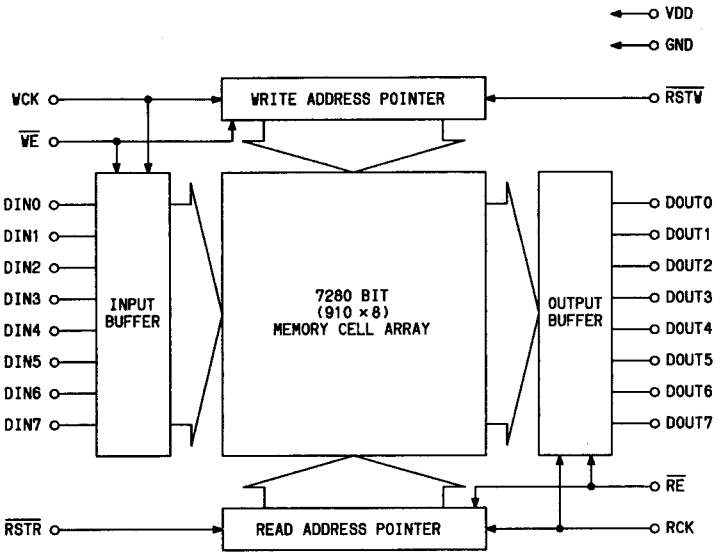

μPD421026 (FIFO 1H DELAY)

(TOP VIEW)

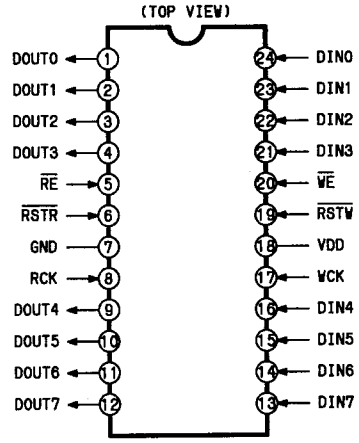

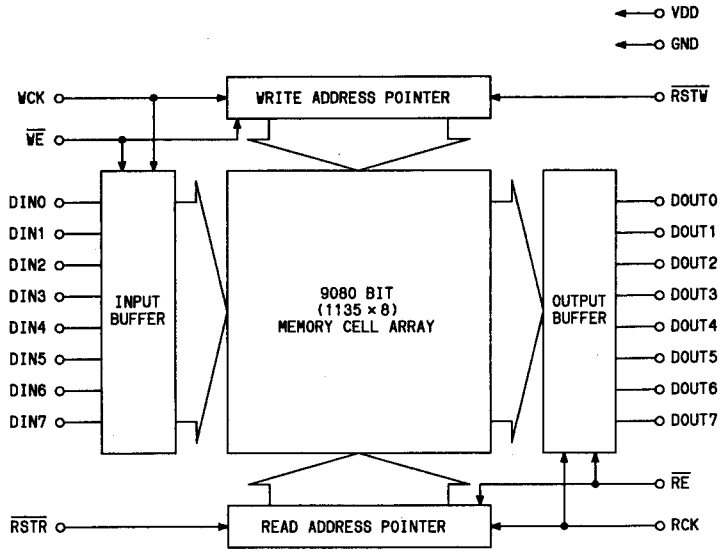

UPD5201C

(QUAD S.P.S.T CMOS ANALOG SWITCH)

(TOP VIEW)

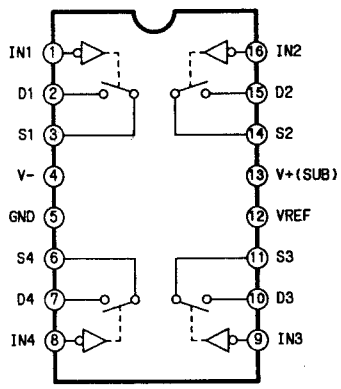

INPUT	SWITCH
"L"	ON
"H"	OFF

μPD65240G057

(106 PIN QFP) (GATE ARRAY)

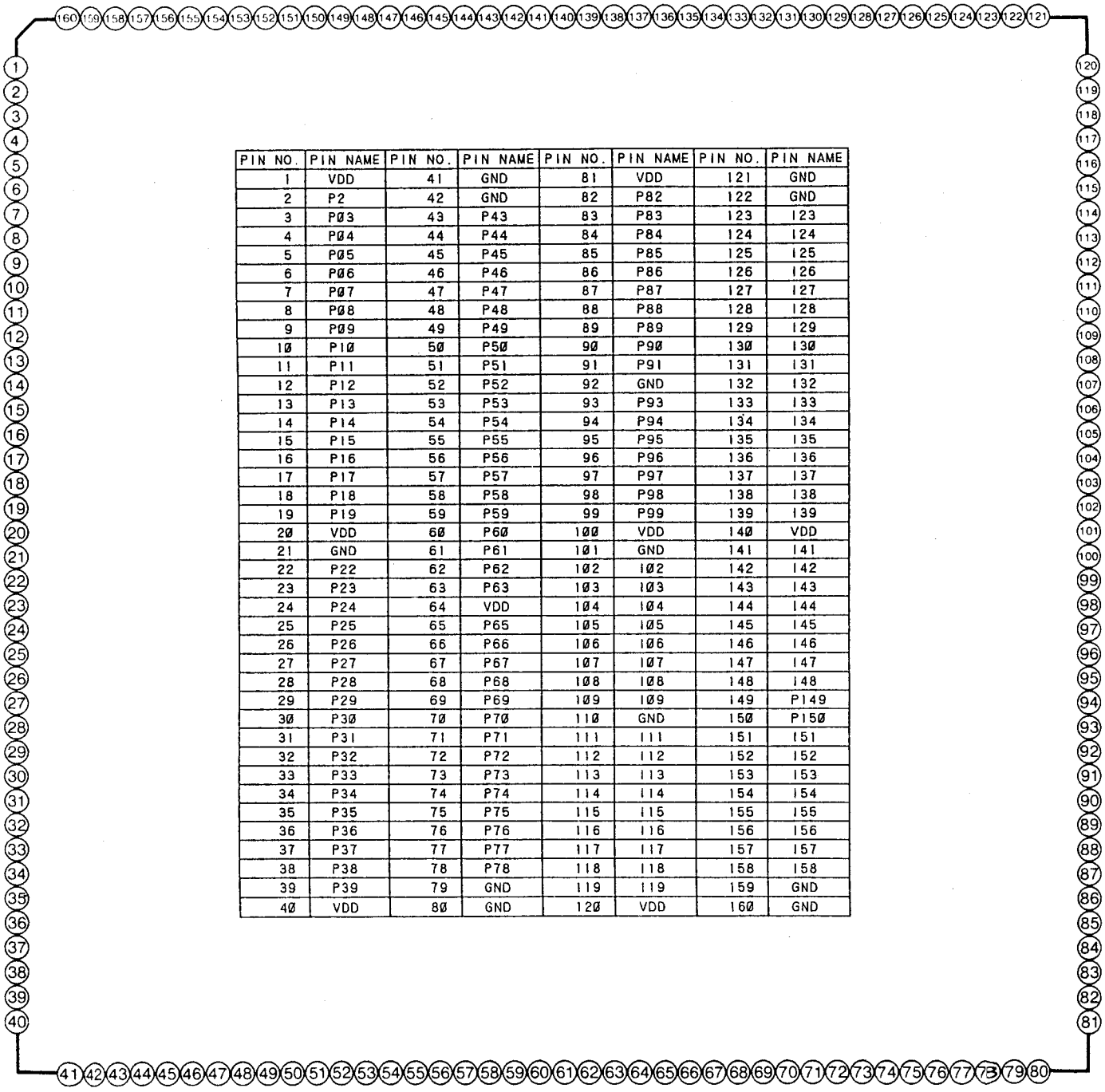

PIN NO.	PIN NAME	PIN NO.	PIN NAME	PIN NO.	PIN NAME	PIN NO.	PIN NAME
1	VDD	41	GND	81	VDD	121	GND
2	P2	42	GND	82	P82	122	GND
3	P03	43	P43	83	P83	123	123
4	P04	44	P44	84	P84	124	124
5	P05	45	P45	85	P85	125	125
6	P06	46	P46	86	P86	126	126
7	P07	47	P47	87	P87	127	127
8	P08	48	P48	88	P88	128	128
9	P09	49	P49	89	P89	129	129
10	P10	50	P50	90	P90	130	130
11	P11	51	P51	91	P91	131	131
12	P12	52	P52	92	GND	132	132
13	P13	53	P53	93	P93	133	133
14	P14	54	P54	94	P94	134	134
15	P15	55	P55	95	P95	135	135
16	P16	56	P56	96	P96	136	136
17	P17	57	P57	97	P97	137	137
18	P18	58	P58	98	P98	138	138
19	P19	59	P59	99	P99	139	139
20	VDD	60	P60	100	VDD	140	VDD
21	GND	61	P61	101	GND	141	141
22	P22	62	P62	102	102	142	142
23	P23	63	P63	103	103	143	143
24	P24	64	VDD	104	104	144	144
25	P25	65	P65	105	105	145	145
26	P26	66	P66	106	106	146	146
27	P27	67	P67	107	107	147	147
28	P28	68	P68	108	108	148	148
29	P29	69	P69	109	109	149	P149
30	P30	70	P70	110	GND	150	P150
31	P31	71	P71	111	111	151	151
32	P32	72	P72	112	112	152	152
33	P33	73	P73	113	113	153	153
34	P34	74	P74	114	114	154	154
35	P35	75	P75	115	115	155	155
36	P36	76	P76	116	116	156	156
37	P37	77	P77	117	117	157	157
38	P38	78	P78	118	118	158	158
39	P39	79	GND	119	119	159	GND
40	VDD	80	GND	120	VDD	160	GND

μPD65664G039

(208 PIN QFP) (GATE ARRAY)

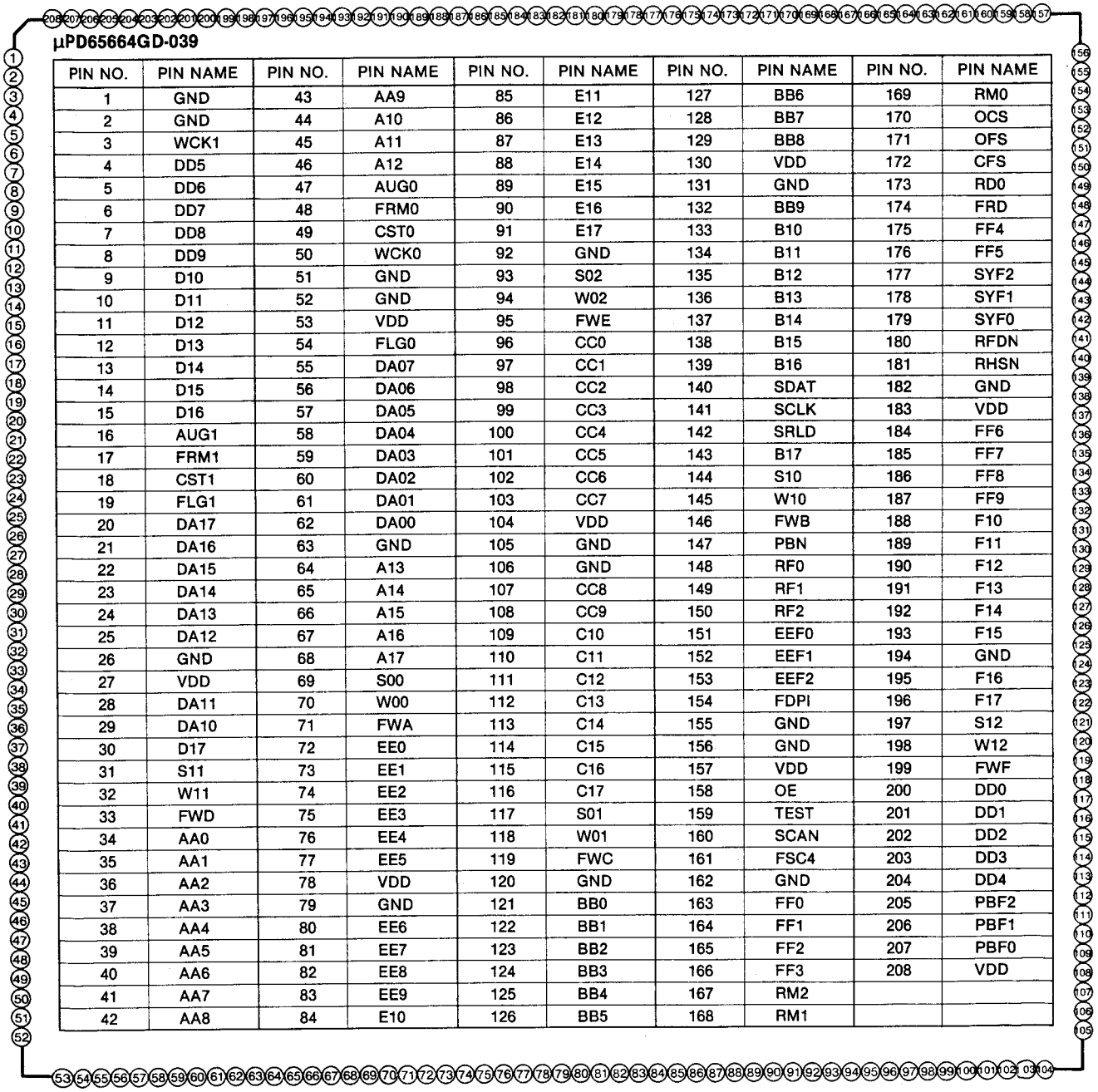

μPD65664GD-039

PIN NO.	PIN NAME	PIN NO.	PIN NAME	PIN NO.	PIN NAME	PIN NO.	PIN NAME	PIN NO.	PIN NAME
1	GND	43	AA9	85	E11	127	BB6	169	RM0
2	GND	44	A10	86	E12	128	BB7	170	OCS
3	WCK1	45	A11	87	E13	129	BB8	171	OFS
4	DD5	46	A12	88	E14	130	VDD	172	CFS
5	DD6	47	AUG0	89	E15	131	GND	173	RD0
6	DD7	48	FRM0	90	E16	132	BB9	174	FRD
7	DD8	49	CST0	91	E17	133	B10	175	FF4
8	DD9	50	WCK0	92	GND	134	B11	176	FF5
9	D10	51	GND	93	S02	135	B12	177	SYF2
10	D11	52	GND	94	W02	136	B13	178	SYF1
11	D12	53	VDD	95	FWE	137	B14	179	SYF0
12	D13	54	FLG0	96	CC0	138	B15	180	RFDN
13	D14	55	DA07	97	CC1	139	B16	181	RHSN
14	D15	56	DA06	98	CC2	140	SDAT	182	GND
15	D16	57	DA05	99	CC3	141	SCLK	183	VDD
16	AUG1	58	DA04	100	CC4	142	SRLD	184	FF6
17	FRM1	59	DA03	101	CC5	143	B17	185	FF7
18	CST1	60	DA02	102	CC6	144	S10	186	FF8
19	FLG1	61	DA01	103	CC7	145	W10	187	FF9
20	DA17	62	DA00	104	VDD	146	FWB	188	F10
21	DA16	63	GND	105	GND	147	PBN	189	F11
22	DA15	64	A13	106	GND	148	RF0	190	F12
23	DA14	65	A14	107	CC8	149	RF1	191	F13
24	DA13	66	A15	108	CC9	150	RF2	192	F14
25	DA12	67	A16	109	C10	151	EEF0	193	F15
26	GND	68	A17	110	C11	152	EEF1	194	GND
27	VDD	69	S00	111	C12	153	EEF2	195	F16
28	DA11	70	W00	112	C13	154	FDPI	196	F17
29	DA10	71	FWA	113	C14	155	GND	197	S12
30	D17	72	EE0	114	C15	156	GND	198	W12
31	S11	73	EE1	115	C16	157	VDD	199	FWF
32	W11	74	EE2	116	C17	158	OE	200	DD0
33	FWD	75	EE3	117	S01	159	TEST	201	DD1
34	AA0	76	EE4	118	W01	160	SCAN	202	DD2
35	AA1	77	EE5	119	FWC	161	FSC4	203	DD3
36	AA2	78	VDD	120	GND	162	GND	204	DD4
37	AA3	79	GND	121	BB0	163	FF0	205	PBF2
38	AA4	80	EE6	122	BB1	164	FF1	206	PBF1
39	AA5	81	EE7	123	BB2	165	FF2	207	PBF0
40	AA6	82	EE8	124	BB3	166	FF3	208	VDD
41	AA7	83	EE9	125	BB4	167	RM2		
42	AA8	84	E10	126	BB5	168	RM1		

UPD71055G
(PARALLEL INTERFACE UNIT)

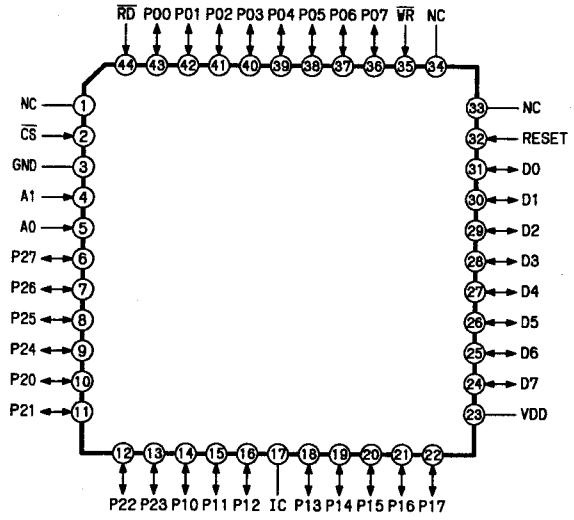

UPD71054G
(PROGRAMMABLE TIMER COUNTER)

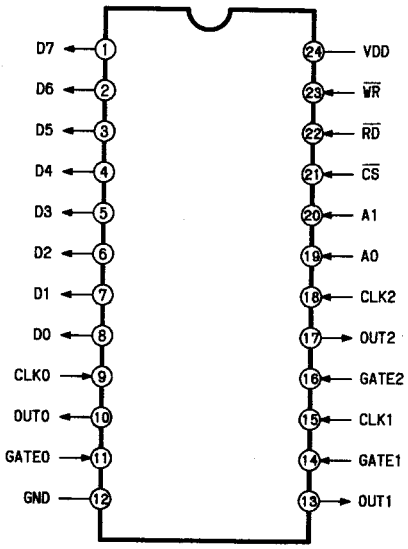

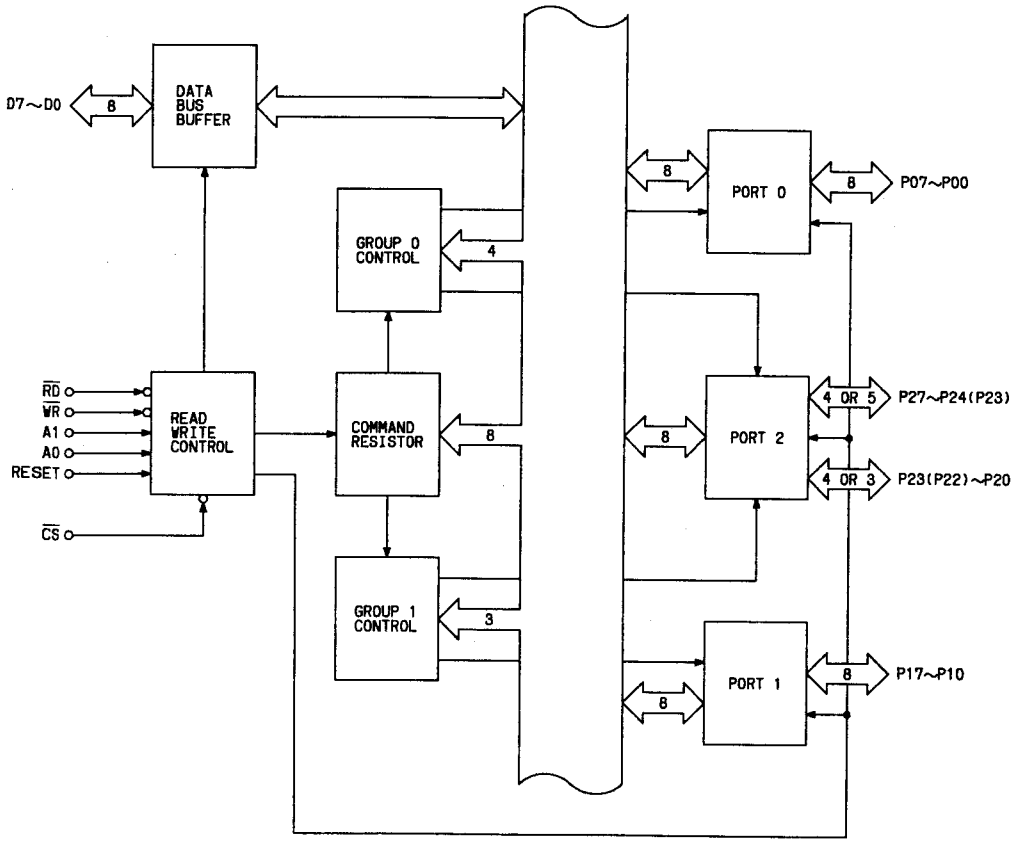

UPD78C10G

(8-BIT MICRO COMPUTER)

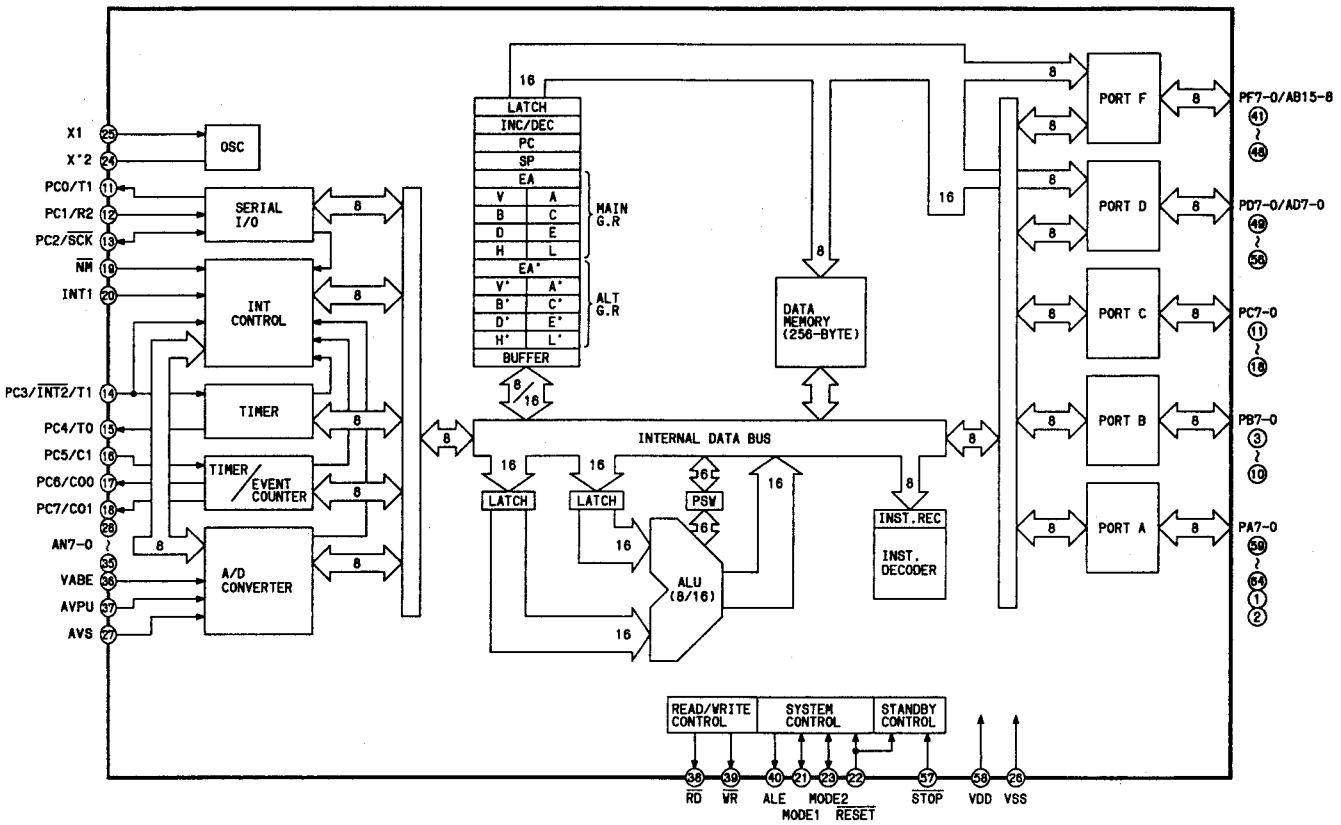

VCR0354

(PHASE COMPORATOR)

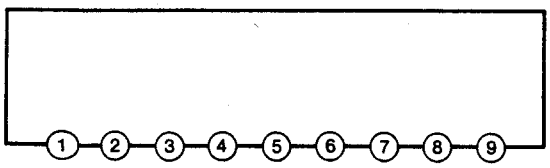

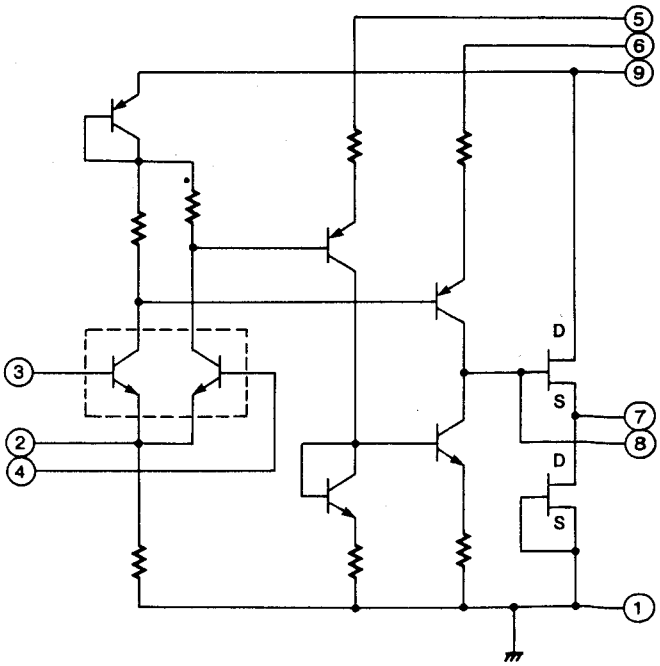

VSC3KI007FL

(140MHz 7 BIT PARALLEL SERIAL CONVERTER)

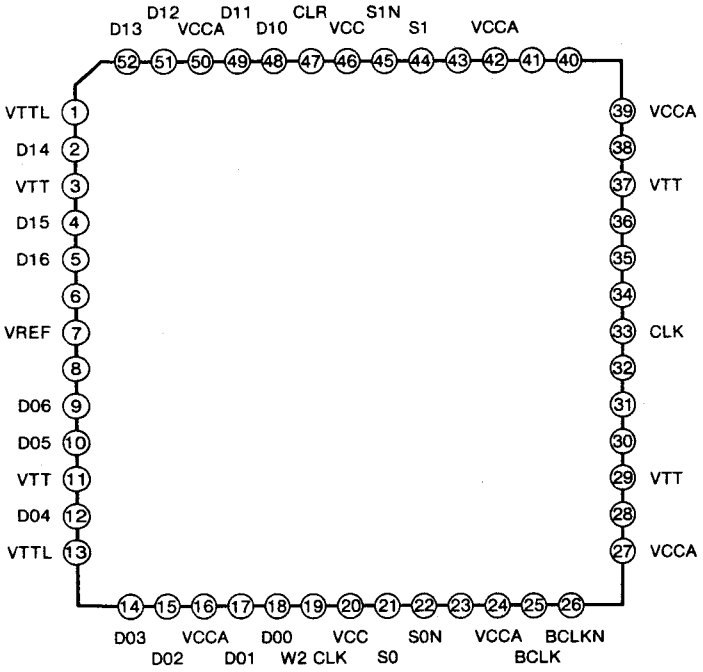

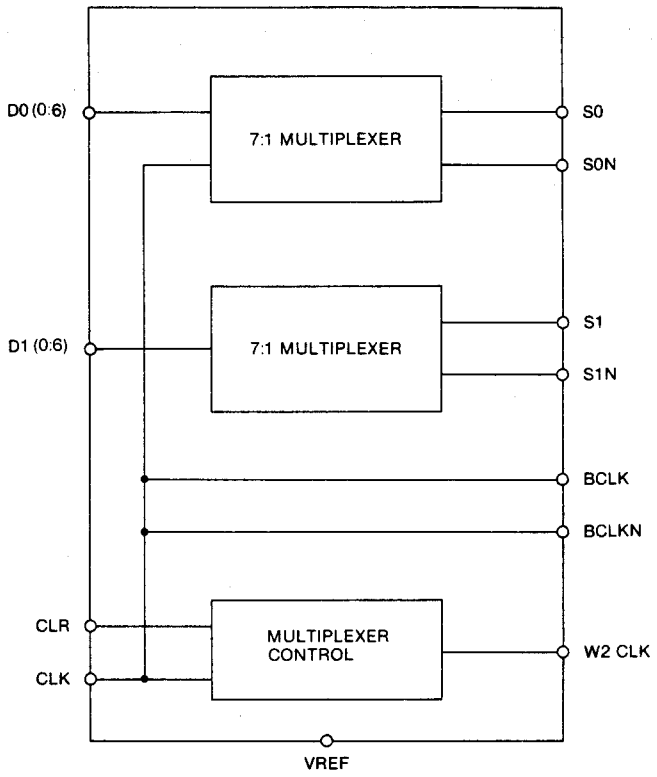

Service Manual

Modules

- ***Block Diagrams***
- ***Printed Circuit Boards***
- ***Schematic Diagrams***

Note:
1. Do not use the part number shown on the schematic diagram or P.C.Board layout for ordering.
   The correct part number for ordering is shown in the Exploded Views/Parts List section.
2. Unless otherwise specified, all resistors are in OHMS,
   K=1,000 OHMS, all capacitors are in MICROFARADS (μF), P=$\mu\mu$F.

Panasonic
Broadcast Systems

BLOCK DIAGRAM / SCHEMATIC DIAGRAM / CIRCUIT BOARD DIAGRAM

BLOCK DIAGRAM

OVERALL 4-1-1
AV DSP (M) PLAYBACK (CH PB) 4-1-2
AV DSP (M) AUDIO PROCESS 4-1-3
AV DSP (M) VIDEO PROCESS 4-1-4
AV DSP SUB 1 (MSUB 1) AV REC 4-1-5
VIDEO PROCESS (MSUB 2) PB MEMORY 4-1-6
VIDEO PROCESS (MSUB 2) PROCESS 4-1-7
AUDIO D/A (S8) 4-1-8
AUDIO A/D (S9) 4-1-9
VIDEO A/D (S10) 4-1-10
VIDEO D/A (S10) 4-1-11
TC CUE AUDIO (S3) 4-1-12
EQ1 (S1) RF 4-1-13
REC AMP 4-1-14
SERVO CONTROL (INTERFACE) 4-1-15
SERVO/AT (S4) OVERALL 4-1-16
SERVO/AT (S4) MPU PERI 4-1-17
SERVO/AT (S4) AD,DA 4-1-18
SERVO/AT (S4) CTL AMP/S REEL AMP/T REEL AMP/CAP FG AMP 4-1-19
DRIVE (S0) MECHANISM CONTROL 4-1-20
DRIVE (S0) SREEL/T REEL/CAPSTAN/DRUM MOTOR DRIVE 4-1-21
SYSTEM CONTROL (S5) 4-1-22
SERIAL I/F 4-1-23
FR CPU 4-1-24

SCHEMATIC DIAGRAMS

MAIN MOTHER (1/7-7/7) 4-2-1
INTERCONNECTION (1/2,2/2) 4-2-6
SUB MOTHER (1/3-3/3) 4-2-8
AV DSP (M 1/46) OVERALL 4-2-9
AV DSP (M 2/46) CONNECTOR 4-2-9
AV DSP (M 3/46) PLAYBACK (OVERALL) 4-2-10
AV DSP (M 4/46) POWER FILTER 4-2-10
AV DSP (M 5/46) PB/CHS2P 4-2-10
AV DSP (M 6/46) PB/CH0 CHPB 4-2-11
AV DSP (M 7/46) PB/CH1 CHPB 4-2-11
AV DSP (M 8/46) PB CH0 IECC DECODER 4-2-12
AV DSP (M 9/46) PB/CH1 IECC DECODER 4-2-12
AV DSP (M 10/46) AUDIO PROCESS (OVERALL) 4-2-13
AV DSP (M 11/46) AUDIO PROCESS/PCM INPUT BUFFER 4-2-13
AV DSP (M 12/46) AUDIO PROCESS/PCM DIF 4-2-14
AV DSP (M 13/46) AUDIO PROCESS/PCM MUTE 4-2-14

BLOCK DIAGRAM / SCHEMATIC DIAGRAM / CIRCUIT BOARD DIAGRAM

AV DSP (M 14/46) AUDIO PROCESS/PCM TCG 4-2-15
AV DSP (M 15/46) AUDIO PROCESS/PCM PLL 4-2-15
AV DSP (M 16/46) AUDIO PROCESS/PCM SYS 4-2-16
AV DSP (M 17/46) AUDIO PROCESS/PCM DATAL 4-2-16
AV DSP (M 18/46) AUDIO PROCESS/PCM CONTROL 4-2-17
AV DSP (M 19/46) AUDIO PROCESS/PCM BUFF MEMORY 4-2-17
AV DSP (M 20/46) AUDIO PROCESS/PCM DATA 2 4-2-18
AV DSP (M 21/46) AUDIO PROCESS/PCM MEMORY A 4-2-18
AV DSP (M 22/46) AUDIO PROCESS/PCM MEMORY B 4-2-18
AV DSP (M 23/46) AUDIO PROCESS/PCM MEMORY C 4-2-18
AV DSP (M 24/46) AUDIO PROCESS/PCM OECC DECODER 4-2-19
AV DSP (M 25/46) AUDIO PROCESS/PCM CUE 4-2-19
AV DSP (M 26/46) AUDIO PROCESS/PCM OUT BUFFER 4-2-20
AV DSP (M 27/46) VIDEO PROCESS (OVERALL) 4-2-20
AV DSP (M 28/46) VIDEO PROCESS REF DETECTOR 4-2-21
AV DSP (M 29/46) VIDEO PROCESS REF DETECTOR/REG 4-2-21
AV DSP (M 30/46) VIDEO PROCESS REF DETECTOR/SYNC BURST SEP 4-2-22
AV DSP (M 31/46) VIDEO PROCESS REF DETECTOR/SYNC DELAY 4-2-22
AV DSP (M 32/46) VIDEO PROCESS REF DETECTOR/SCH DETECTOR 4-2-23
AV DSP (M 33/46) VIDEO PROCESS REF DETECTOR/REF AIF 4-2-23
AV DSP (M 34/46) VIDEO PROCESS REF DETECTOR/REF PLL 4-2-24
AV DSP (M 35/46) VIDEO PROCESS REF DETECTOR/SYSTEM PLL 4-2-24
AV DSP (M 36/46) VIDEO PROCESS REF IF 4-2-25
AV DSP (M 37/46) VIDEO PROCESS SYSTEM SGEN 4-2-25
AV DSP (M 38/46) VIDEO PROCESS SYNC ROM 4-2-26
AV DSP (M 39/46) VIDEO PROCESS CONNECTION 4-2-26
AV DSP (M 40/46) OUTPUT INTERFACE 4-2-27
AV DSP (M 41/46) PASSCON 4-2-27
AV DSP (M 42/46) AV REC 4-2-28
AV DSP (M 43/46) INPUT INTERFACE 4-2-28
AV DSP (M 44/46) INPUT INTERFACE/INCOM INTERFACE 4-2-28
AV DSP (M 45/46) SYSTEM INTERFACE 4-2-29
AV DSP (M 46/46) SYSTEM INTERFACE/ADDRESS DECODER 4-2-29
AV DSP SUB 1 (M SUB 1 1/12) OVERALL 4-2-30
AV DSP SUB 1 (M SUB 1 2/12) PCM REC 4-2-30
AV DSP SUB 1 (M SUB 1 3/12) CONNECTOR 4-2-31
AV DSP SUB 1 (M SUB 1 4/12) REC CONTROL 4-2-31
AV DSP SUB 1 (M SUB 1 5/12) REC DATA 4-2-32
AV DSP SUB 1 (M SUB 1 6/12) MEMORY MODULATOR 0A 4-2-32
AV DSP SUB 1 (M SUB 1 7/12) MEMORY MODULATOR 0B 4-2-32
AV DSP SUB 1 (M SUB 1 8/12) MEMORY MODULATOR 1A 4-2-33
AV DSP SUB 1 (M SUB 1 9/12) MEMORY MODULATOR 1B 4-2-33
AV DSP SUB 1 (M SUB 1 10/12) FLING DELAY 4-2-33
AV DSP SUB 1 (M SUB 1 11/12) MOD814 4-2-34

BLOCK DIAGRAM / SCHEMATIC DIAGRAM / CIRCUIT BOARD DIAGRAM

AV DSP SUB 1 (MSUB 1 12/12) P2S 4-2-34
VIDEO PROCESS (M SUB 2 1/19) OVERALL 4-2-35
VIDEO PROCESS (M SUB 2 2/19) CONNECTOR PASSCON 4-2-35
VIDEO PROCESS (M SUB 2 3/19) PB MEMORY OVERALL 4-2-36
VIDEO PROCESS (M SUB 2 4/19) PB MEMORY/PLAYBACK CONTROL 4-2-37
VIDEO PROCESS (M SUB 2 5/19) PB MEMORY/ CH0 MEMORY 0 4-2-37
VIDEO PROCESS (M SUB 2 6/19) PB MEMORY/ CH0 MEMORY 1 4-2-37
VIDEO PROCESS (M SUB 2 7/19) PB MEMORY/ CH0 MEMORY 2 4-2-37
VIDEO PROCESS (M SUB 2 8/19) PB MEMORY/ CH1 MEMORY 0 4-2-38
VIDEO PROCESS (M SUB 2 9/19)PB MEMORY/ CH1 MEMORY 1 4-2-38
VIDEO PROCESS (M SUB 2 10/19) PB MEMORY/ CH1 MEMORY 2 4-2-38
VIDEO PROCESS (M SUB 2 11/19) PB MEMORY/PB DATA 4-2-39
VIDEO PROCESS (M SUB 2 12/19) PB MEMORY/OECC DECODER 4-2-39
VIDEO PROCESS (M SUB 2 13/19) OUTPUT BUFFER 4-2-40
VIDEO PROCESS (M SUB 2 14/19) PROCESS OVERALL 4-2-40
VIDEO PROCESS (M SUB 2 15/19) PROCESS/PROCESS CONTROL 4-2-41
VIDEO PROCESS (M SUB 2 16/19) PROCESS/CONCEAL 4-2-41
VIDEO PROCESS (M SUB 2 17/19) PROCESS/OUTPUT SELECTOR 4-2-42
VIDEO PROCESS (M SUB 2 18/19) PROCESS/DECODER 4-2-42
VIDEO PROCESS (M SUB 2 19/19) PROCESS/PROCESS AMP 4-2-43
DRIVE (S0 1/11) CONNECTOR 4-2-44
DRIVE (S0 2/11) SOLENOID DRIVE 4-2-45
DRIVE (S0 3/11) CAPSTAN DRIVE 4-2-45
DRIVE (S0 4/11) DRUM DRIVE 4-2-46
DRIVE (S0 5/11) S REEL DRIVE 4-2-46
DRIVE (S0 6/11) T REEL DRIVE 4-2-47
DRIVE (S0 7/11) MAIN SUB DRIVE 4-2-47
DRIVE (S0 8/11) GARAGE DRIVE 4-2-48
DRIVE (S0 9/11) MECHANISM DRIVE 4-2-48
DRIVE (S0 10/11) MECHNIAM CONRTOL 4-2-49
DRIVE (S0 11/11) POWER REGULATOR 4-2-49
EQ1 (S1 1/5) INTEGRAL,FIX, FL ,GAIN CONTROL 4-2-50
EQ1 (S1 2/5) 2ND EQ, ENV DETECTOR,QUANTIZATION 4-2-50
EQ1 (S1 3/5) DISCRIMINATOR, PLL 4-2-51
EQ1 (S1 4/5) SYSCON SERIAL INTERFACE,SERIAL HEAD SW GEN 4-2-51
EQ1 (S1 5/5) CONNECTOR 4-2-52
TC/CUE AUDIO (S3 1/10-10/10) 4-2-52
TC/CUE SUB (S3 SUB 1/3-3/3) 4-2-57
SERVO/AT (S4 1/16) CONNECTOR 4-2-59
SERVO/AT (S4 2/16) OVERALL 1 4-2-59
SERVO/AT (S4 3/16) OVERALL 2 4-2-60
SERVO/AT (S4 4/16) CONTROL AMP 1 4-2-60
SERVO/AT (S4 5/16) CONTROL AMP 2 4-2-61
SERVO/AT (S4 6/16) CAPSTAN FG AMP 1 4-2-61

BLOCK DIAGRAM / SCHEMATIC DIAGRAM / CIRCUIT BOARD DIAGRAM

SERVO/AT (S4 7/16) CAPSTAN FG AMP 2 4-2-62
SERVO/AT (S4 8/16) CAPSTAN FG AMP 3 4-2-62
SERVO/AT (S4 9/16) CAPSTAN FG AMP 4 4-2-63
SERVO/AT (S4 10/16) AD,DA 4-2-63
SERVO/AT (S4 11/16) LOADING FG AMP 4-2-64
SERVO/AT (S4 12/16) MPU PERI 1 4-2-64
SERVO/AT (S4 13/16) MPU PERI 2 4-2-65
SERVO/AT (S4 14/16) MPU PERI 3 4-2-65
SERVO/AT (S4 15/16) MPU PERI 4 4-2-66
SERVO/AT (S4 16/16) AT DRIVE 4-2-66
SYSTEM CONTRIOL (S5 1/9-9/9) 4-2-67
AUDIO D/A (S8 1/7-7/7) 4-2-72
AUDIO A/D (S9 1/4-4/4) 4-2-76
VIDEO A/D,D/A (S10 1/27) A/D OVERALL 4-2-78
VIDEO A/D,D/A (S10 2/27) INPUT BUFFER 4-2-78
VIDEO A/D,D/A (S10 3/27) AGC ADJ 4-2-79
VIDEO A/D,D/A (S10 4/27) AD 4-2-79
VIDEO A/D,D/A (S10 5/27) SYNC SEP 4-2-80
VIDEO A/D,D/A (S10 6/27) CF ADJUST 4-2-80
VIDEO A/D,D/A (S10 7/27) LEVEL DET 4-2-81
VIDEO A/D,D/A (S10 8/27) NON STD GA 4-2-81
VIDEO A/D,D/A (S10 9/27) WINDOW 4-2-82
VIDEO A/D,D/A (S10 10/27) STD PLL 4-2-82
VIDEO A/D,D/A (S10 11/27) VCO PLL 4-2-83
VIDEO A/D,D/A (S10 12/27) NON STD PLL 4-2-83
VIDEO A/D,D/A (S10 13/27) CLK SELECTOR 4-2-84
VIDEO A/D,D/A (S10 14/27) DV ECL 2 TTL 4-2-84
VIDEO A/D,D/A (S10 15/27) AGC 4-2-85
VIDEO A/D,D/A (S10 16/27) D OUT BUFFER 4-2-85
VIDEO A/D,D/A (S10 17/27) SYSTEM INTERFACE 4-2-86
VIDEO A/D,D/A (S10 18/27) D/A OVERALL 4-2-86
VIDEO A/D,D/A (S10 19/27) DA ECL 2 TTL 4-2-87
VIDEO A/D,D/A (S10 20/27) DA 4-2-87
VIDEO A/D,D/A (S10 21/27) DA CLAMP 4-2-88
VIDEO A/D,D/A (S10 22/27) RET V AMP 4-2-88
VIDEO A/D,D/A (S10 23/27) V1 OUT BUFFER 4-2-89
VIDEO A/D,D/A (S10 24/27) V2 OUT BUFFER 4-2-89
VIDEO A/D,D/A (S10 25/27) V3 OUT BUFFER 4-2-90
VIDEO A/D,D/A (S10 26/27) WFM OUT BUFFER 4-2-90
VIDEO A/D,D/A (S10 27/27) CONNECTOR 4-2-91
REC AMP (1/7-7/7) 4-2-92
HEAD AMP (1/2,2/2) 4-2-96
SERIAL I/F (1/8) OVERALL 4-2-97

BLOCK DIAGRAM / SCHEMATIC DIAGRAM / CIRCUIT BOARD DIAGRAM

SERIAL I/F (2/8) CONNECTOR 4-2-97
SERIAL I/F (3/8) SYS IF 4-2-98
SERIAL I/F (4/8) S2P 4-2-98
SERIAL I/F (5/8) DEC 4-2-99
SERIAL I/F (6/8) ENC 4-2-99
SERIAL I/F (7/8) P2S 4-2-100
SERIAL I/F (8/8) A DIO 4-2-100
SERIAL I/O 4-2-101
CYLINDER POWER 4-2-102
CYLINDER REGLATOR 4-2-103
SERVO CONTROL 4-2-104
MECHANISM INTERFACE 4-2-105
AUTO OFF LED 4-2-105
EJECT 4-2-105
ERR LED 4-2-105
HEAD CONNECTION 4-2-105
EM EJECT 4-2-105
POWER 1 4-2-106
POWER SUB 1 4-2-106
POWER 2 4-2-107
POWER 3 4-2-107
POWER 1 SUB 2 4-2-107
HEADPHONE JACK 4-2-108
HEADPHONE VR 4-2-108
FR VR 4-2-108
FR LED 4-2-109
FR CPU SUB 4-2-109
FR CPU (1/6) CPU 4-2-110
FR CPU (2/6) FR IF 4-2-110
FR CPU (3/6) BUZZER 4-2-111
FR CPU (4/6) DIAL S 4-2-111
FR CPU (5/6) AD 4-2-112
FR CPU (6/6) CONNECTOR 4-2-112
FR SW (1/3) SW 4-2-113
FR SW (2/3) CONNECTOR 4-2-113
FR SW (3/3) DISPLAY 4-2-114
VIDEO JACK (1/3-3/3) 4-2-114
AUDIO JACK 4-2-116

CIRCUIT BAORD DIAGRAM

CICUIT BOARAD LOCATION 4-3-1
AV DSP SUB 1 (M SUB 1)/AV REC P.C.BOARD 4-3-1
AV DSP (M) P.C.BOARD 4-3-2
AV DSP SUB 2 (MSUB 2)/VIDEO PROCESS P.C.BOARD 4-3-3

BLOCK DIAGRAM / SCHEMATIC DIAGRAM / CIRCUIT BOARD DIAGRAM

DRIVE (S0) P.C.BOARD 4-3-4
EQ1 (S1) P.C.BOARD 4-3-5
TC/CUE (S3) P.C.BOARD 4-3-6
TC/CUE SUB (S3 SUB) P.C.BOARD 4-3-7
SERVO/AT (S4) P.C.BOARD 4-3-9
SYSTEM CONTROL P.C.BOARD 4-3-10
AUDIO D/A (S8) P.C.BOARD 4-3-11
AUDIO A/D (S9) P.C.BOARD 4-3-12
VIDEO A/D,D/A (S10) P.C.BOARD 4-3-13
MAIN MOTHER P.C.BOARD 4-3-14
SUB MOTHER P.C.BOARD 4-3-15
HEAD CONNECTION P.C.BOARD 4-3-15
EM EJECT P.C.BOARD 4-3-15
REC AMP P.C.BOARD 4-3-16
CYLINDER POWER P.C.BOARD 4-3-17
HEAD AMP P.C.BOARD 4-3-17
CYLINDER REGULATOR P.C.BOARD 4-3-18
SERIAL I/F P.C.BOARD 4-3-18
SERIAL I/O P.C.BOARD 4-3-18
SERVO CONTROL P.C.BOARD 4-3-19
MECHANISM INTERFACE P.C.BOARD 4-3-19
POWER 1 P.C.BOARD 4-3-20
POWER 1 SUB P.C.BOARD 4-3-20
POWER 2 P.C.BOARD 4-3-21
POWER 3 P.C.BOARD 4-3-22
AUTO OFF LED P.C.BOARD 4-3-23
EJECT P.C.BOARD 4-3-23
ERROR LED P.C.BOARD 4-3-23
HP JACK P.C.BOARD 4-3-23
HP VR P.C.BOARD 4-3-23
FR LED P.C.BOARD 4-3-23
FR SW P.C.BOARD 4-3-24
FR CPU P.C.BOARD 4-3-25
FR CPU SUB P.C.BOARD 4-3-25
FR VR P.C.BOARD 4-3-26
AUDIO JACK P.C.BOARD 4-3-26
VIDEO JACK P.C.BOARD 4-3-27

OVERALL BLOCK DIAGRAM

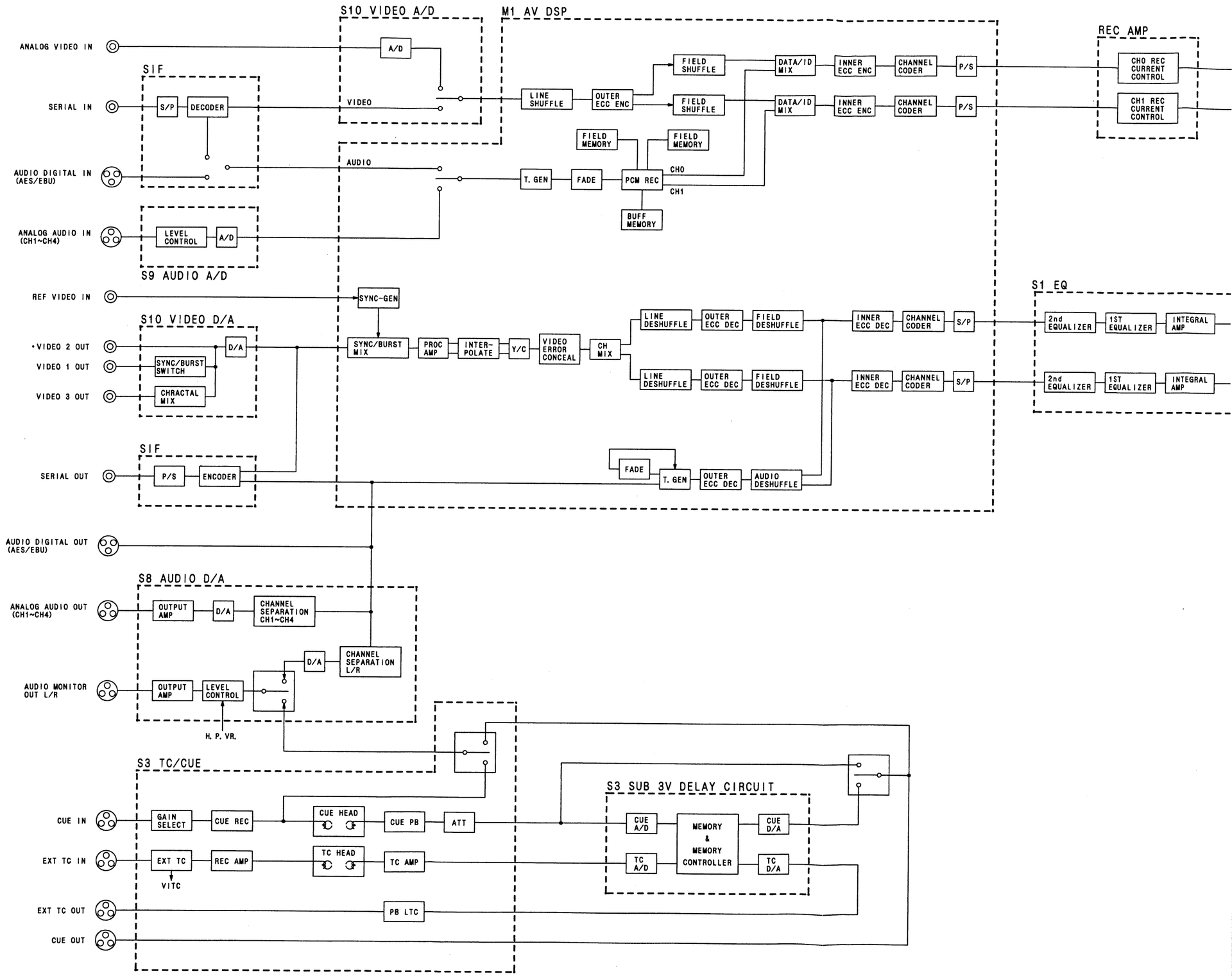

M

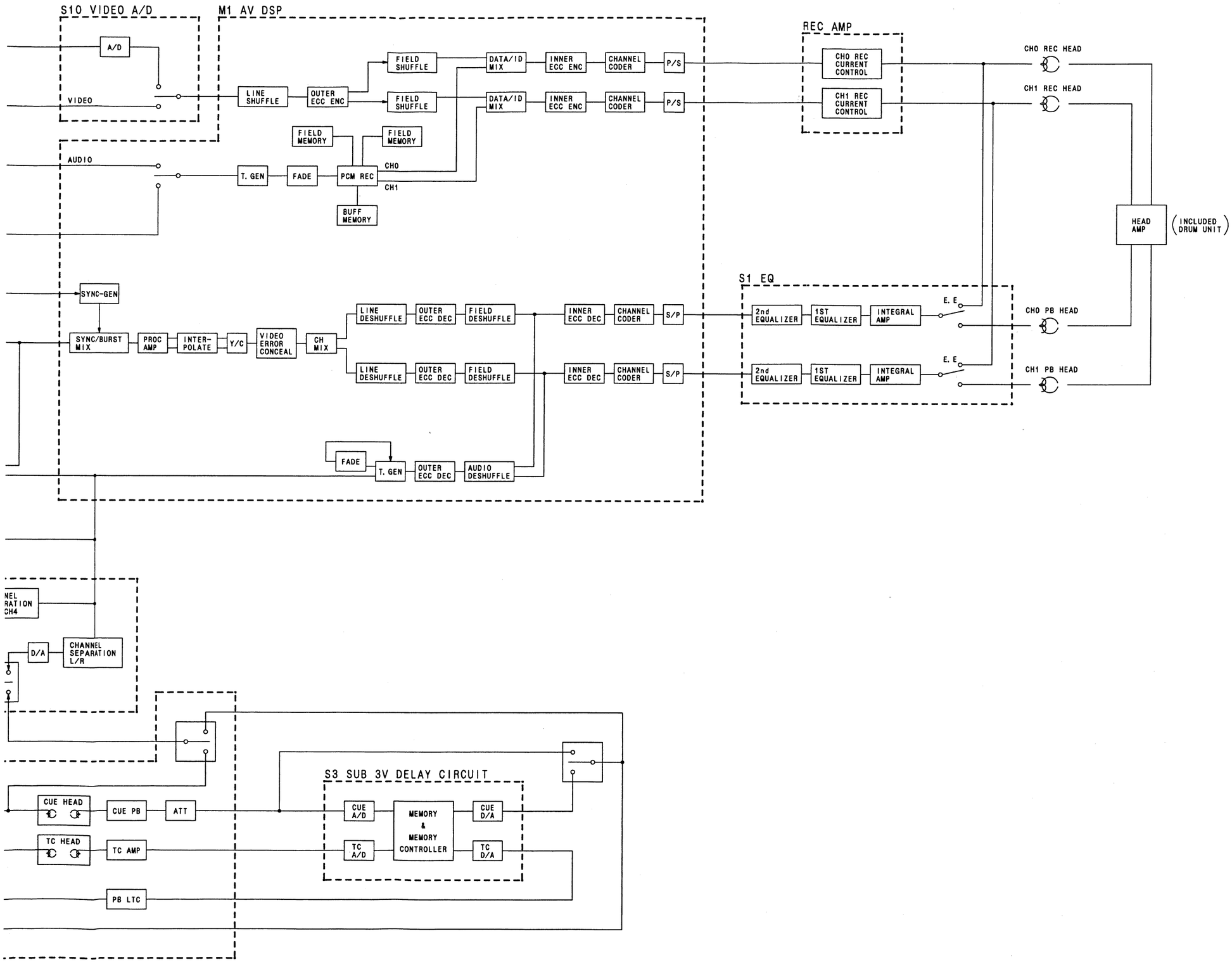

REVERSE SIDE

AV DSP (M)
PLAYBACK (CH PB)

AV DSP (M) PLAYBACK (CH PB) BLOCK DIAGRAM

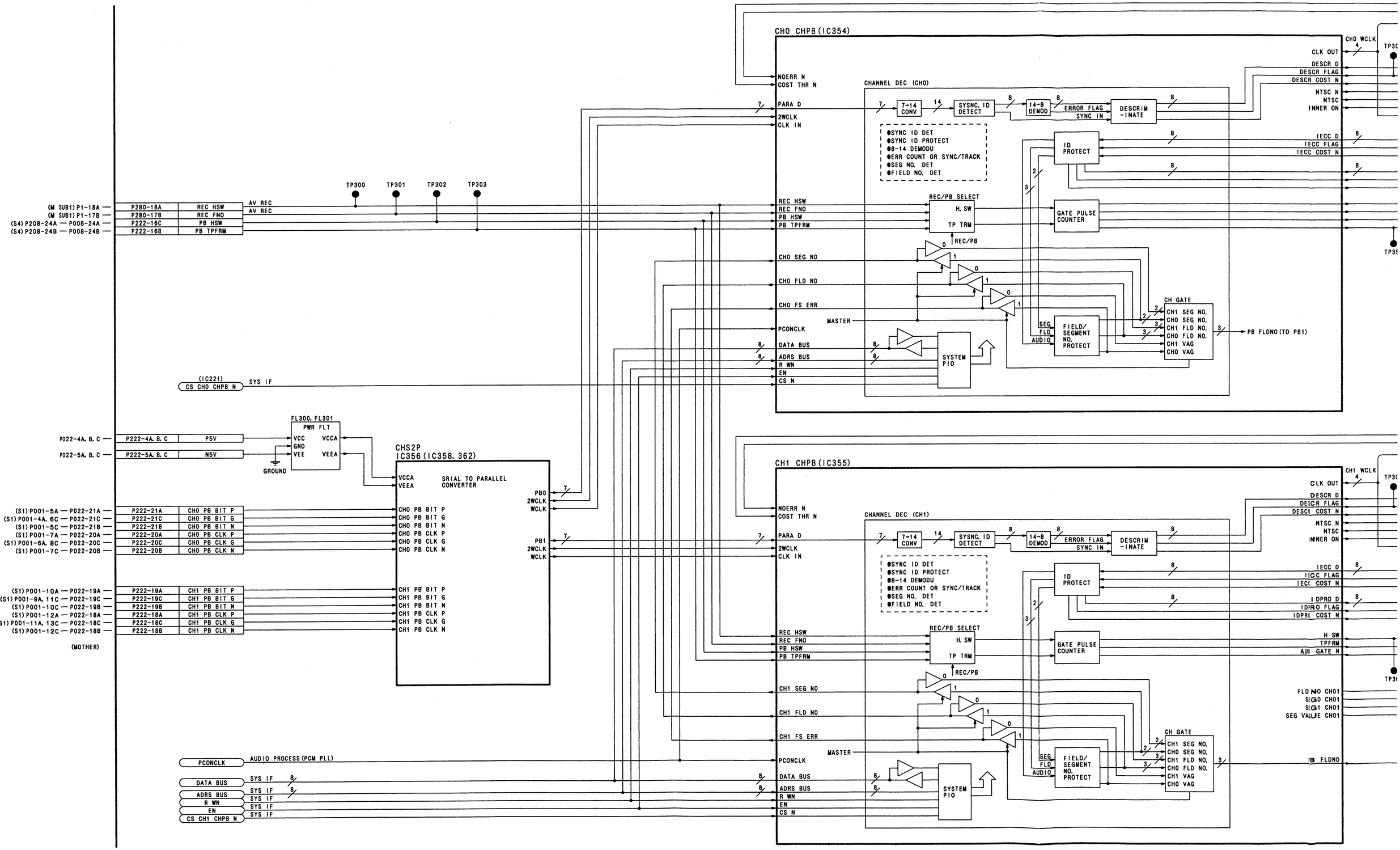

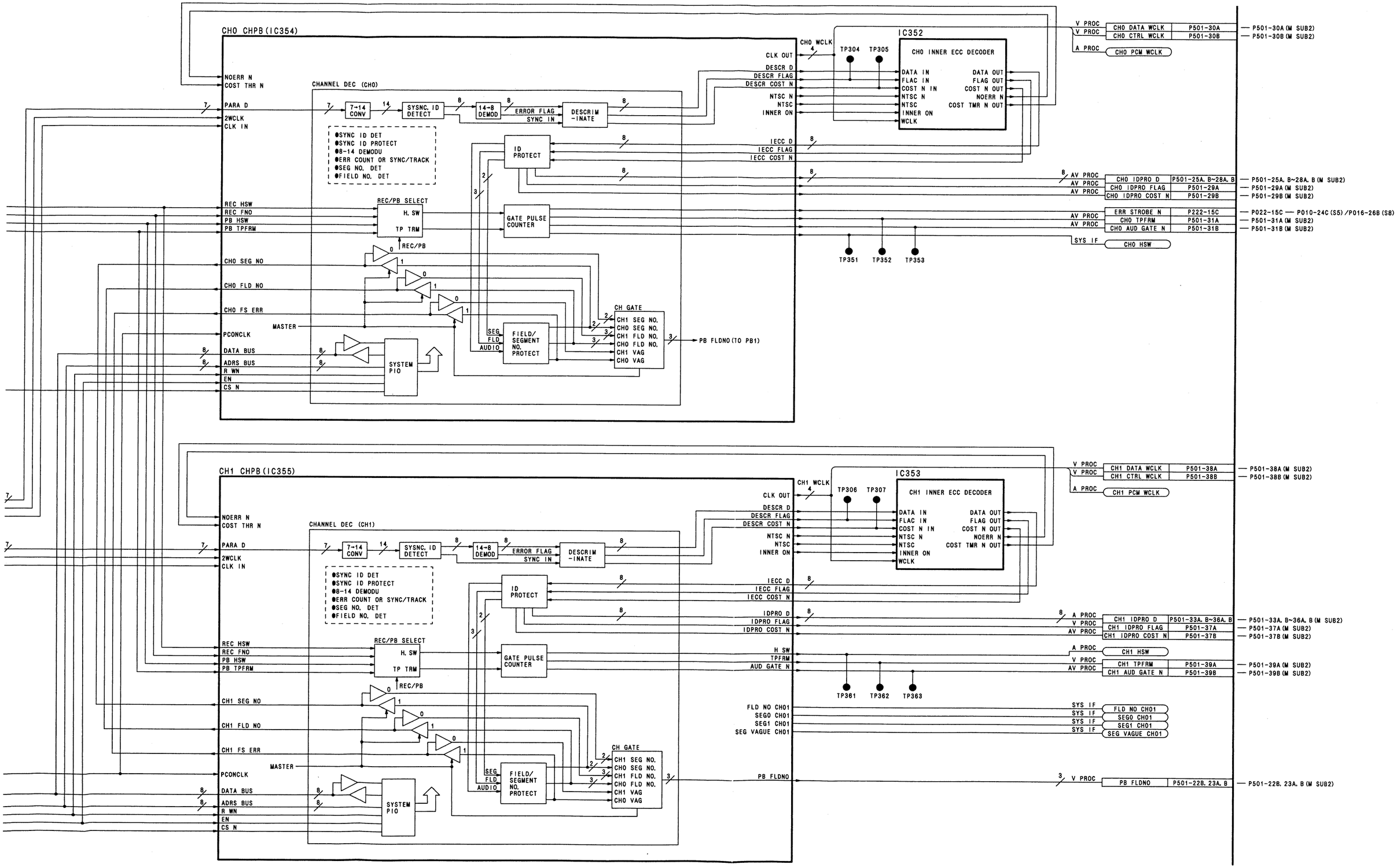
CH0 CHPB (IC354)
NOERR N
COST THR N
PARA D
2WCLK
CLK IN
CHANNEL DEC (CH0)
7-14 CONV
SYSNC, ID DETECT
14-8 DEMOD
ERROR FLAG
SYNC IN
DESCRIM-INATE
●SYNC ID DET
●SYNC ID PROTECT
●8-14 DEMODU
●ERR COUNT OR SYNC/TRACK
●SEG NO. DET
●FIELD NO. DET
ID PROTECT
GATE PULSE COUNTER
REC/PB SELECT
H. SW
TP TRM
REC/PB
REC HSW
REC FNO
PB HSW
PB TPFRM
CH0 SEG NO
CH0 FLD NO
CH0 FS ERR
MASTER
PCONCLK
DATA BUS
ADRS BUS
R WN
EN
CS N
SYSTEM PIO
SEG
FLD
AUDIO
FIELD/ SEGMENT NO. PROTECT
CH GATE
CH1 SEG NO.
CH0 SEG NO.
CH1 FLD NO.
CH0 FLD NO.
CH1 VAG
CH0 VAG
PB FLDNO (TO PB1)
CLK OUT
DESCR D
DESCR FLAG
DESCR COST N
NTSC N
NTSC
INNER ON
CH0 WCLK
IECC D
IECC FLAG
IECC COST N
IDPRO D
IDPRO FLAG
IDPRO COST N
H SW
TPFRM
AUD GATE N
TP304
TP305
IC352
CH0 INNER ECC DECODER
DATA IN
FLAC IN
COST N IN
NTSC N
NTSC
INNER ON
WCLK
DATA OUT
FLAG OUT
COST N OUT
NOERR N
COST TMR N OUT
TP351
TP352
TP353
V PROC
CH0 DATA WCLK
P501-30A
CH0 CTRL WCLK
P501-30B
A PROC
CH0 PCM WCLK
AV PROC
CH0 IDPRO D
P501-25A, B~28A, B
CH0 IDPRO FLAG
P501-29A
CH0 IDPRO COST N
P501-29B
ERR STROBE N
P222-15C
CH0 TPFRM
P501-31A
CH0 AUD GATE N
P501-31B
SYS IF
CH0 HSW
P501-30A (M SUB2)
P501-30B (M SUB2)
P501-25A, B~28A, B (M SUB2)
P501-29A (M SUB2)
P501-29B (M SUB2)
P022-15C — P010-24C (S5) /P016-26B (S8)
P501-31A (M SUB2)
P501-31B (M SUB2)
CH1 CHPB (IC355)
CH1 SEG NO
CH1 FLD NO
CH1 FS ERR
CH1 WCLK
FLD NO CH01
SEG0 CH01
SEG1 CH01
SEG VAGUE CH01
PB FLDNO
TP306
TP307
IC353
CH1 INNER ECC DECODER
TP361
TP362
TP363
CH1 DATA WCLK
P501-38A
CH1 CTRL WCLK
P501-38B
CH1 PCM WCLK
CH1 IDPRO D
P501-33A, B~36A, B
CH1 IDPRO FLAG
P501-37A
CH1 IDPRO COST N
P501-37B
CH1 HSW
CH1 TPFRM
P501-39A
CH1 AUD GATE N
P501-39B
FLD NO CH01
SEG0 CH01
SEG1 CH01
SEG VAGUE CH01
PB FLDNO
P501-22B, 23A, B
P501-38A (M SUB2)
P501-38B (M SUB2)
P501-33A, B~36A, B (M SUB2)
P501-37A (M SUB2)
P501-37B (M SUB2)
P501-39A (M SUB2)
P501-39B (M SUB2)
P501-22B, 23A, B (M SUB2)

AV DSP (M) AUDIO PROCESS BLOCK DIAGRAM

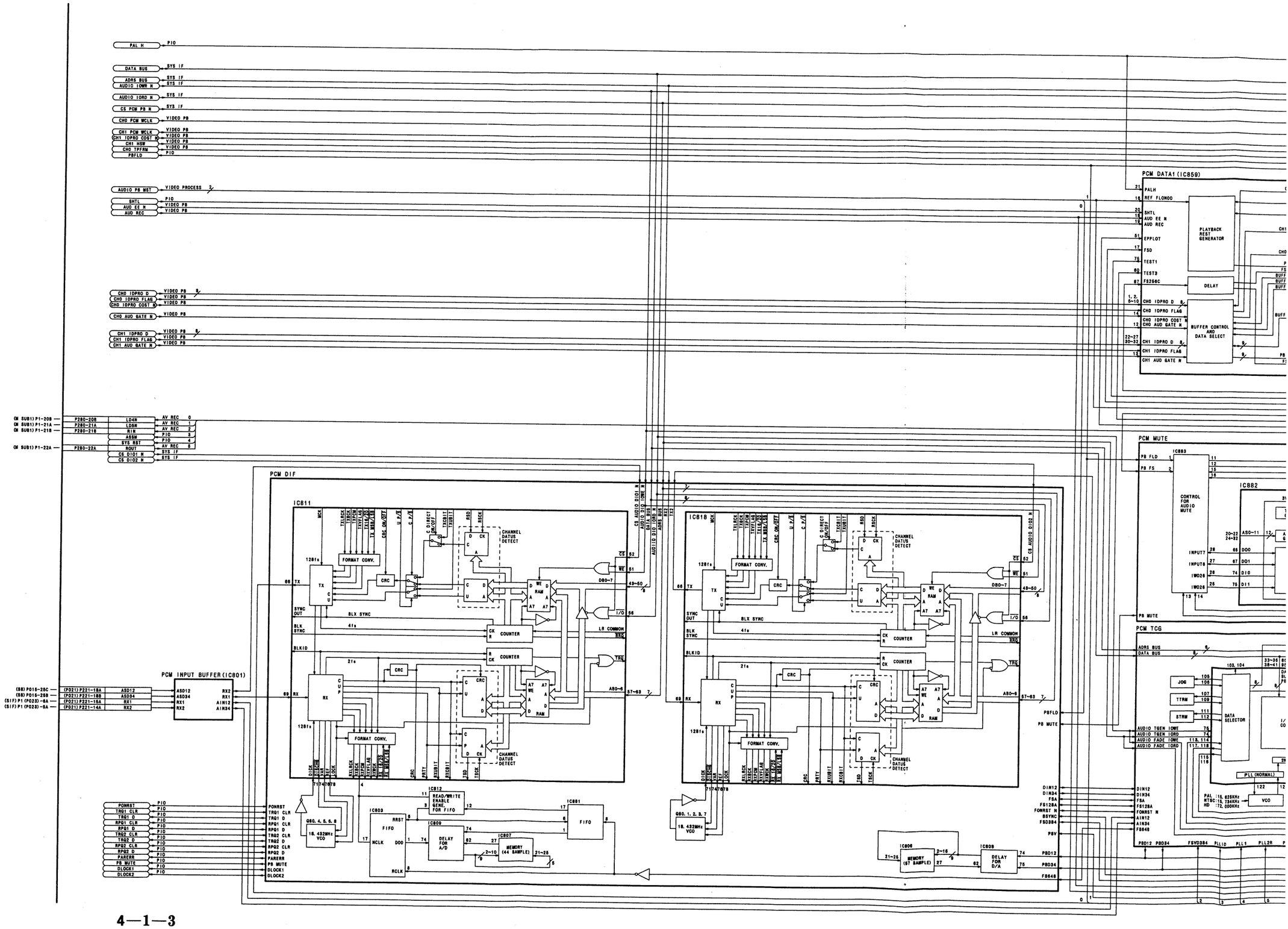

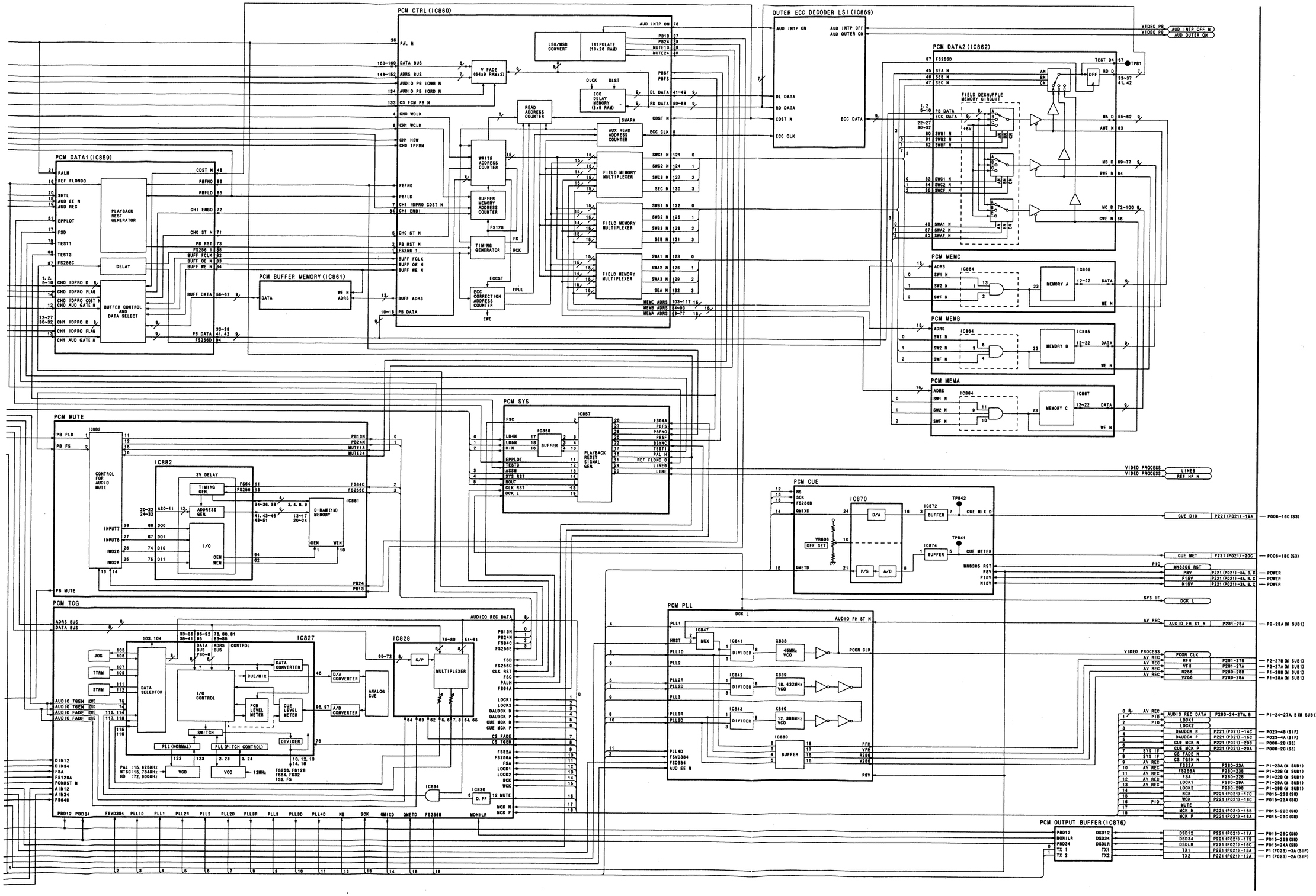
PCM CTRL (IC860)
OUTER ECC DECODER LSI (IC869)
PCM DATA2 (IC862)
PCM DATA1 (IC859)
PCM BUFFER MEMORY (IC861)
PCM MEMC
PCM MEMB
PCM MEMA
PCM MUTE
PCM SYS
PCM CUE
PCM TCG
PCM PLL
PCM OUTPUT BUFFER (IC876)
IC882
IC827
IC828
IC870
IC872
IC874
IC847
IC841
IC842
IC843
IC880
IC834
IC830
IC863
IC864
IC865
IC867
IC868
IC857
IC881
IC893
V FADE (64x9 RAMx2)
LSB/MSB CONVERT
INTPOLATE (10x26 RAM)
ECC DELAY MEMORY (8x9 RAM)
READ ADDRESS COUNTER
WRITE ADDRESS COUNTER
BUFFER MEMORY ADDRESS COUNTER
AUX READ ADDRESS COUNTER
ECC CORRECTION ADDRESS COUNTER
TIMING GENERATOR
FIELD MEMORY MULTIPLEXER
FIELD DESHUFFLE MEMORY CIRCUIT
PLAYBACK REST GENERATOR
DELAY
BUFFER CONTROL AND DATA SELECT
CONTROL FOR AUDIO MUTE
PLAYBACK RESET SIGNAL GEN.
BUFFER
3V DELAY
TIMING GEN.
ADDRESS GEN.
I/O
D-RAM (1M) MEMORY
DATA SELECTOR
I/O CONTROL
DATA CONVERTER
CUE/MIX
PCM LEVEL METER
CUE LEVEL METER
D/A CONVERTER
A/D CONVERTER
ANALOG CUE
S/P
MULTIPLEXER
SWITCH
DIVIDER
PLL (NORMAL)
PLL (PITCH CONTROL)
VCO
MUX
D. FF
D/A
A/D
P/S
MEMORY A
MEMORY B
MEMORY C
VIDEO PB
AUD INTP OFF N
AUD OUTER ON
VIDEO PROCESS
LINE6
REF HP N
CUE DIN
CUE MET
MN8305 RST
P8V
P15V
N15V
SYS IF
DCK L
AV REC
AUDIO FH ST N
PCON CLK
RFH
VFH
R256
V256
AUDIO REC DATA
LOCK1
LOCK2
DAUDCK N
DAUDCK P
CUE MCK N
CUE MCK P
CS FADE N
CS TGEN N
FS32A
FS256A
FSA
BCK
WCK
MUTE
MCK N
MCK P
DSD12
DSD34
DSDLR
TX1
TX2
PB MUTE
MONILR
FS256B
GMIXD
GMETD
SCK
NS

AV DSP (M) VIDEO PROCESS BLOCK DIAGRAM

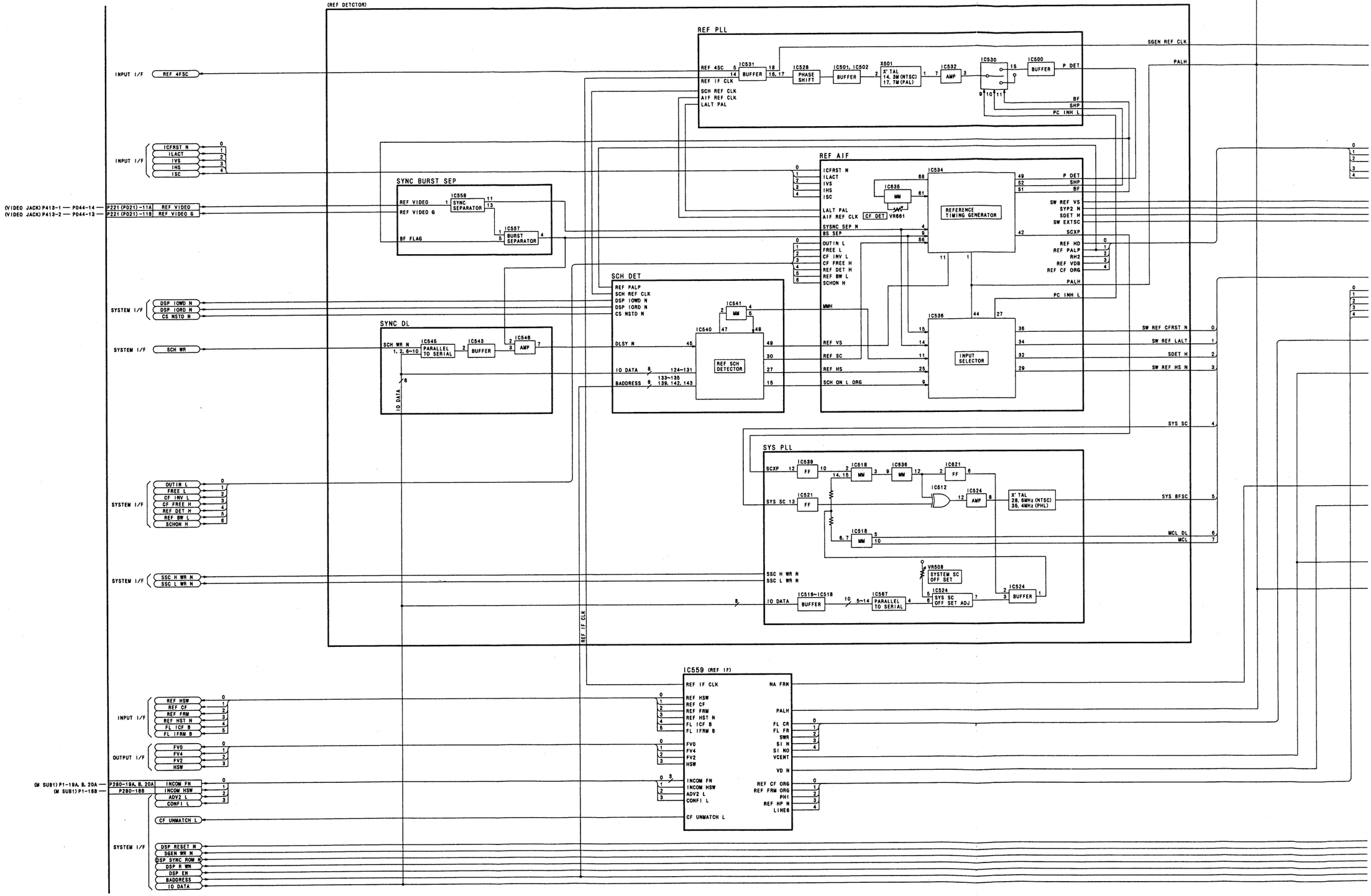

REVERSE SIDE

AV DSP (M)
AUDIO PROCESS

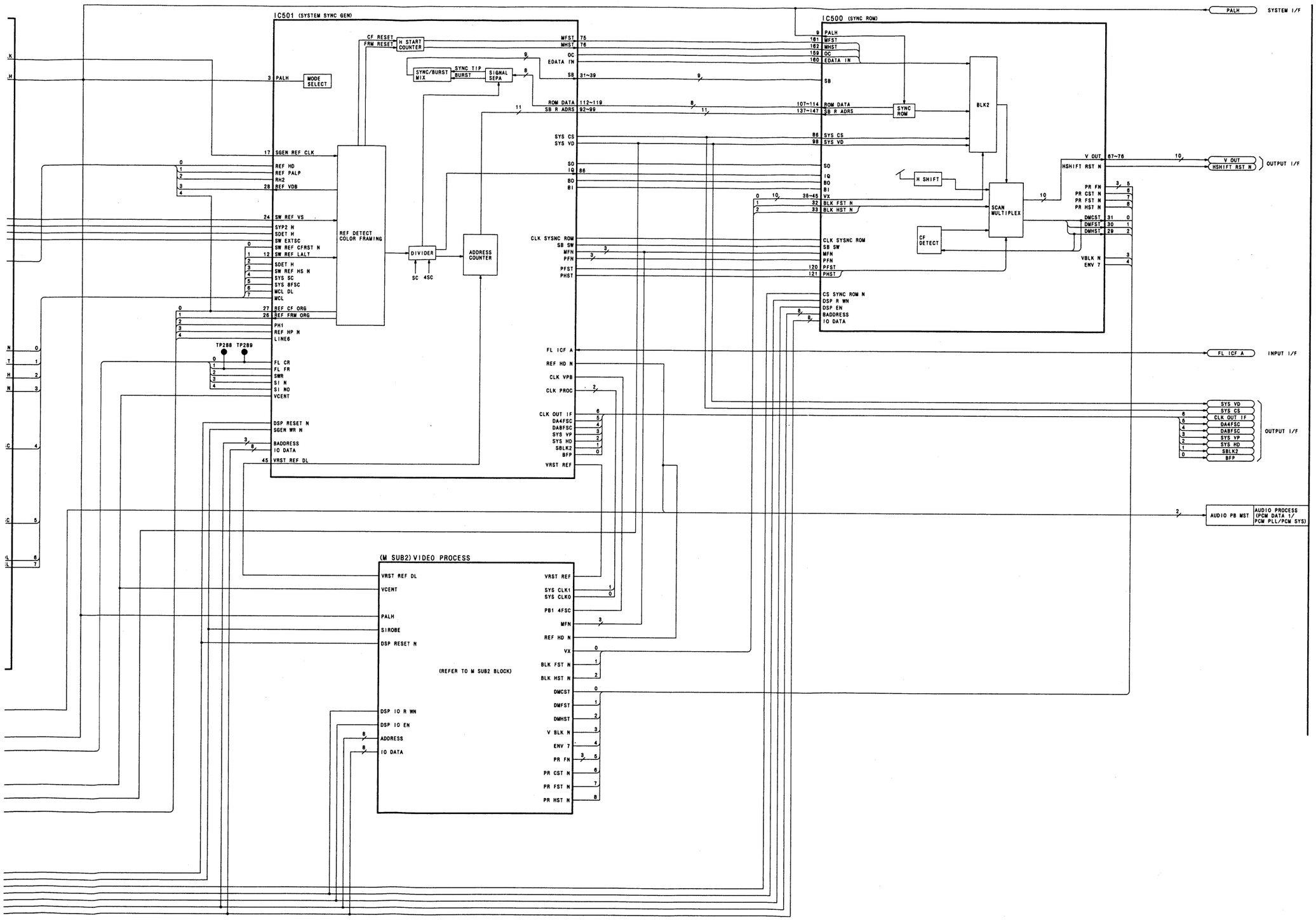
IC501 (SYSTEM SYNC GEN)
IC500 (SYNC ROM)
PALH
SYSTEM I/F
MODE SELECT
CF RESET
FRM RESET
H START COUNTER
SYNC/BURST MIX
SYNC TIP BURST
SIGNAL SEPA
MFST 75
MHST 76
OC
EDATA IN
SB 31~39
ROM DATA 112~119
SB R ADRS 92~99
SYS CS
SYS VD
SO
IO
BO
BI
CLK SYSNC ROM
SB SW
MFN
PFN
PFST
PHST
CS SYNC ROM N
DSP R WN
DSP EN
BADDRESS
IO DATA
SYNC ROM
BLK2
H SHIFT
SCAN MULTIPLEX
CF DETECT
V OUT 67~76
HSHIFT RST N
PR FN
PR CST N
PR FST N
PR HST N
DMCST
DMFST
DMHST
VBLK N
ENV 7
OUTPUT I/F
REF DETECT COLOR FRAMING
DIVIDER
SC 4SC
ADDRESS COUNTER
SGEN REF CLK
REF HD
REF PALP
RH2
REF VDB
SW REF VS
SYP2 N
SDET H
SW EXTSC
SW REF CFRST N
SW REF LALT
SDET H
SW REF HS N
SYS SC
SYS BFSC
MCL DL
MCL
REF CF ORG
REF FRM ORG
PH1
REF HP N
LINE6
TP288 TP289
FL CR
FL FR
SWR
SI N
SI NO
VCENT
DSP RESET N
SGEN WR N
BADDRESS
IO DATA
VRST REF DL
FL ICF A
REF HD N
CLK VPB
CLK PROC
CLK OUT 1F
DA4FSC
DABFSC
SYS VP
SYS HD
SBLK2
BFP
VRST REF
INPUT I/F
AUDIO PB MST
AUDIO PROCESS (PCM DATA I/ PCM PLL/PCM SYS)
(M SUB2) VIDEO PROCESS
VRST REF DL
VCENT
PALH
SIROBE
DSP RESET N
(REFER TO M SUB2 BLOCK)
DSP IO R WN
DSP IO EN
ADDRESS
IO DATA
VRST REF
SYS CLK1
SYS CLK0
PB1 4FSC
MFN
REF HD N
VX
BLK FST N
BLK HST N
DMCST
DMFST
DMHST
V BLK N
ENV 7
PR FN
PR CST N
PR FST N
PR HST N

AV DSP SUB 1 (M SUB 1) AV REC BLOCK DIAGRAM

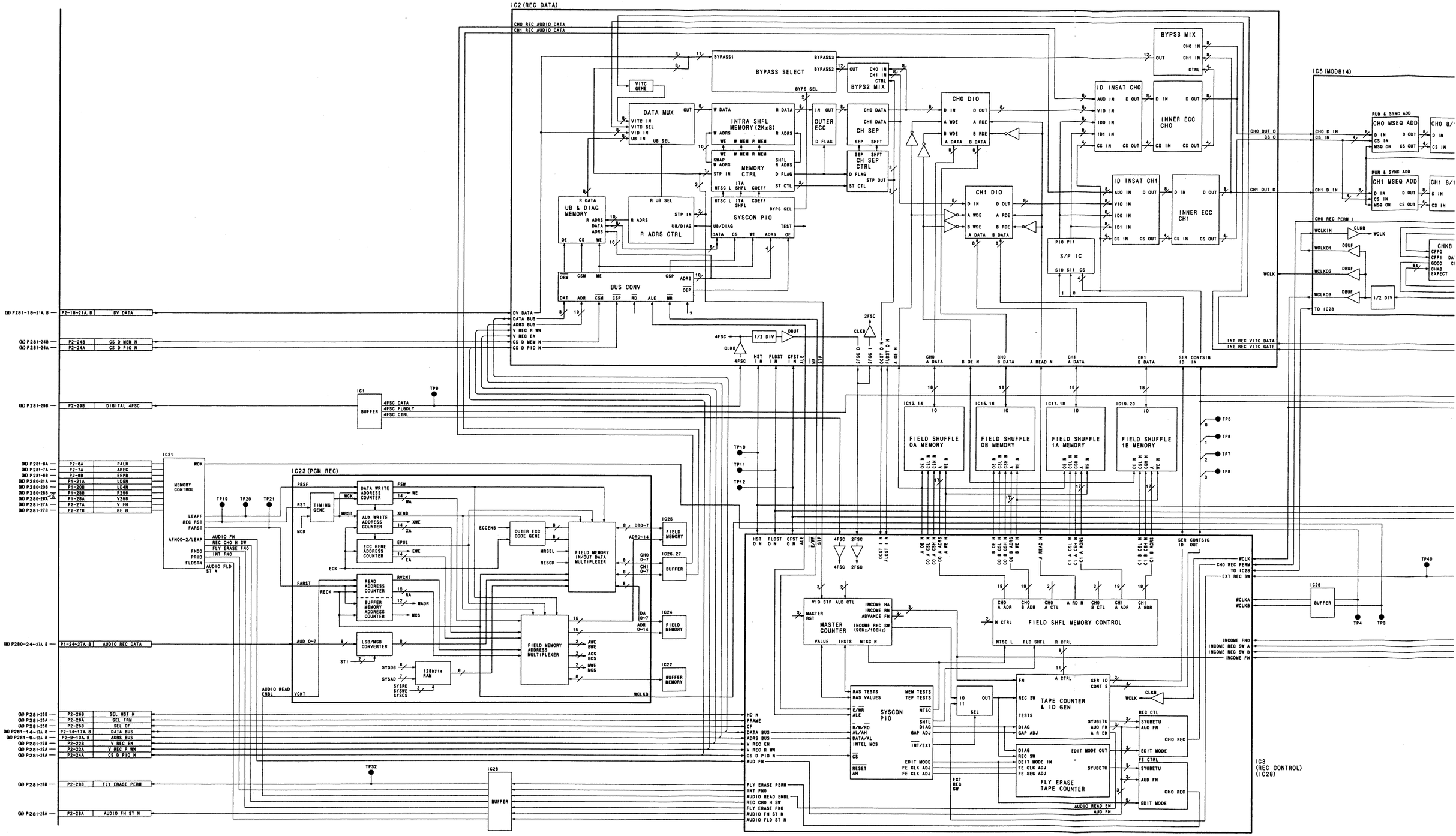

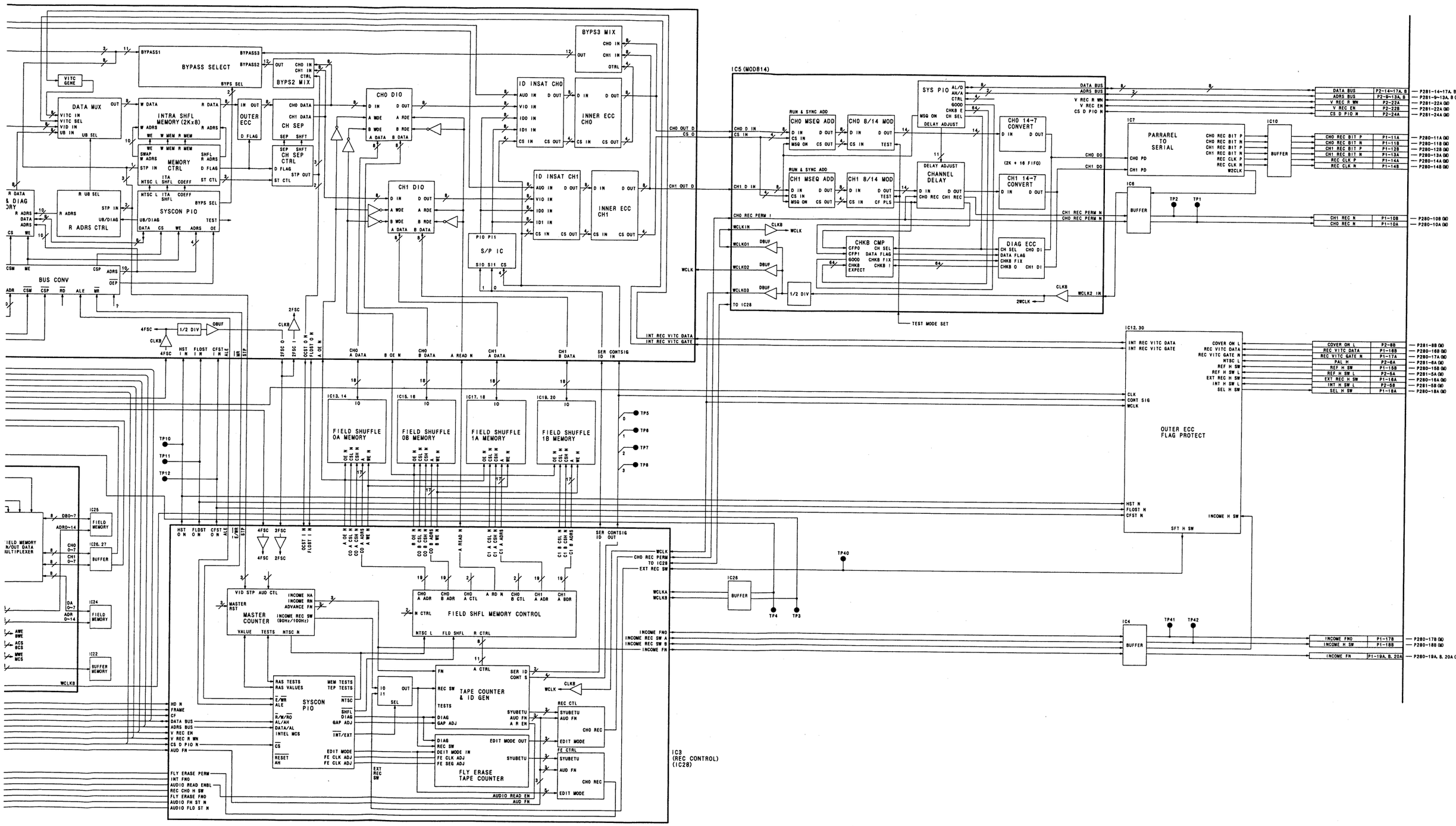

REVERSE SIDE

VIDEO PROCESS (M SUB 2)
PB MEMORY

VIDEO PROCESS (M SUB 2) PB MEMORY BLOCK DIAGRAM

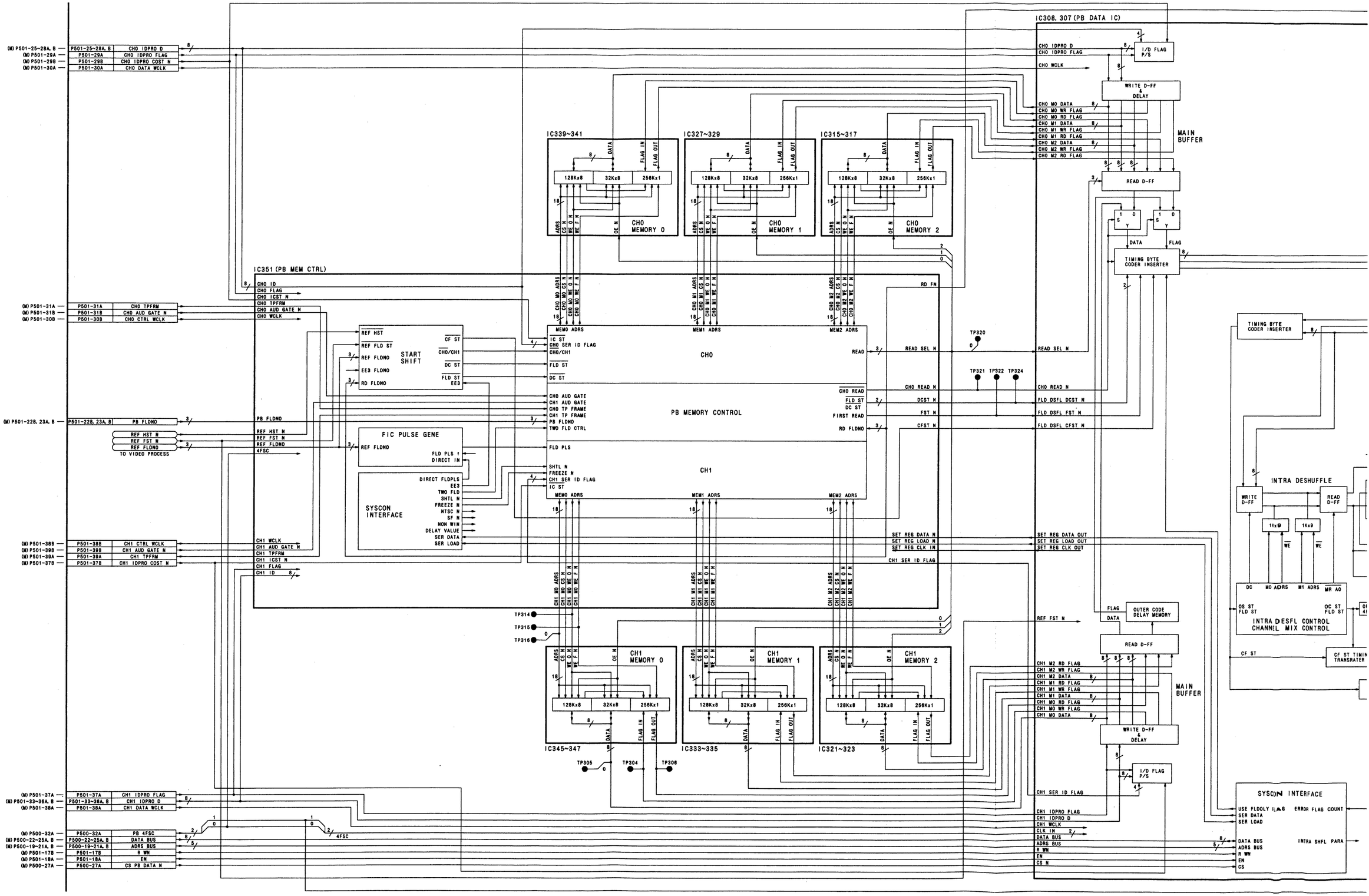

AGRAM

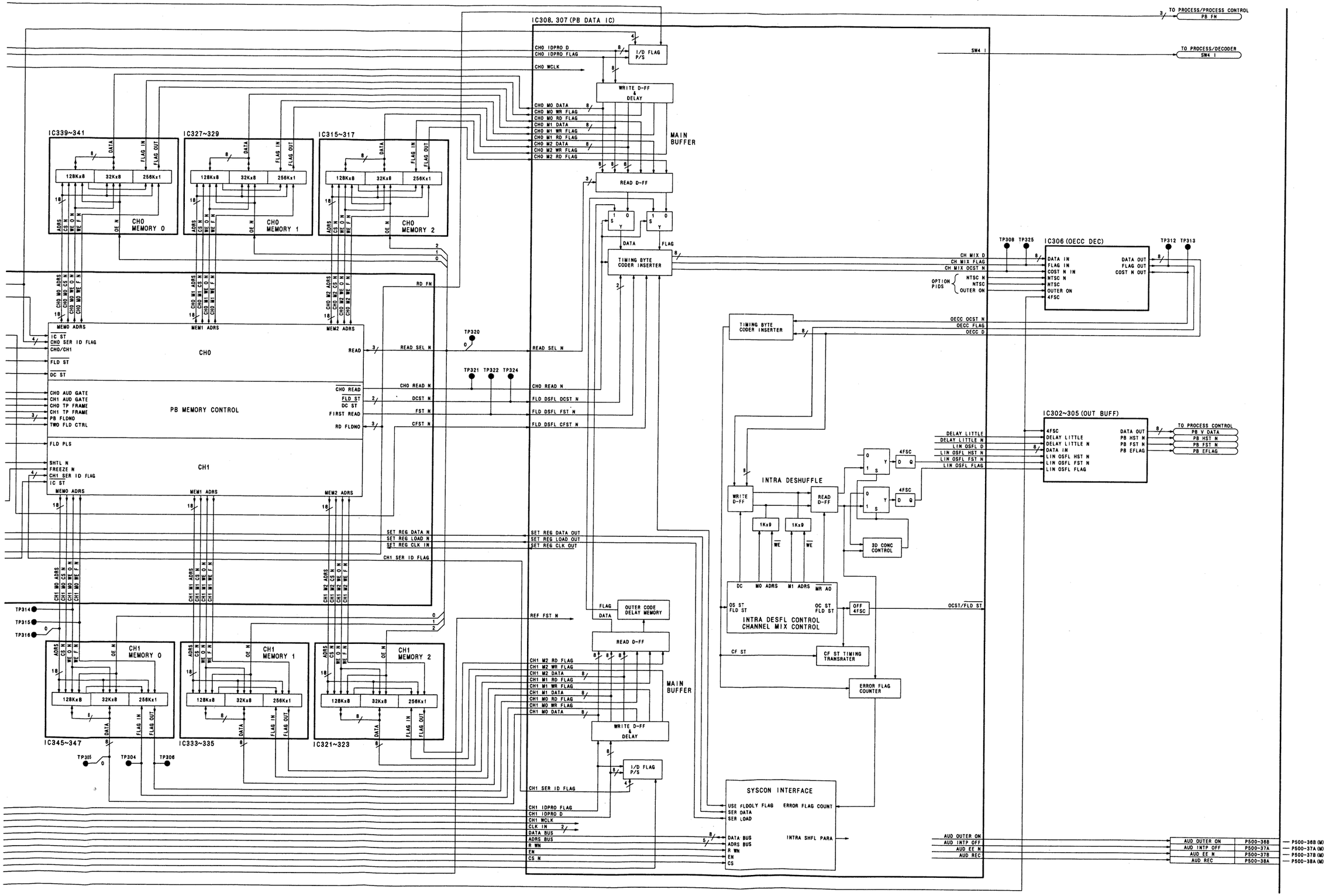
IC308, 307 (PB DATA IC)
I/O FLAG P/S
WRITE D-FF & DELAY
READ D-FF
MAIN BUFFER
TIMING BYTE CODER INSERTER
IC339~341
IC327~329
IC315~317
128Kx8
32Kx8
256Kx1
CH0 MEMORY 0
CH0 MEMORY 1
CH0 MEMORY 2
CH0
CH1
PB MEMORY CONTROL
IC345~347
IC333~335
IC321~323
CH1 MEMORY 0
CH1 MEMORY 1
CH1 MEMORY 2
TO PROCESS/PROCESS CONTROL
PB FN
TO PROCESS/DECODER
SW4 I
IC306 (OECC DEC)
DATA IN
FLAG IN
COST N IN
NTSC N
NTSC
OUTER ON
4FSC
DATA OUT
FLAG OUT
COST N OUT
OPTION PIDS
IC302~305 (OUT BUFF)
DELAY LITTLE
DELAY LITTLE N
LIN OSFL D
LIN OSFL HST N
LIN OSFL FST N
LIN OSFL FLAG
DATA IN
DATA OUT
PB HST N
PB FST N
PB EFLAG
TO PROCESS CONTROL
PB V DATA
INTRA DESHUFFLE
WRITE D-FF
READ D-FF
1Kx9
3D CONC CONTROL
INTRA DESFL CONTROL
CHANNEL MIX CONTROL
OFF 4FSC
CF ST TIMING TRANSRATER
ERROR FLAG COUNTER
OUTER CODE DELAY MEMORY
I/D FLAG P/S
SYSCON INTERFACE
USE FLDOLY FLAG
SER DATA
SER LOAD
ERROR FLAG COUNT
INTRA SHFL PARA
AUD OUTER ON
AUD INTP OFF
AUD EE N
AUD REC
P500-36B (M)
P500-37A (M)
P500-37B (M)
P500-38A (M)

VIDEO PROCESS (M SUB 2) PROCESS BLOCK DIAGRAM

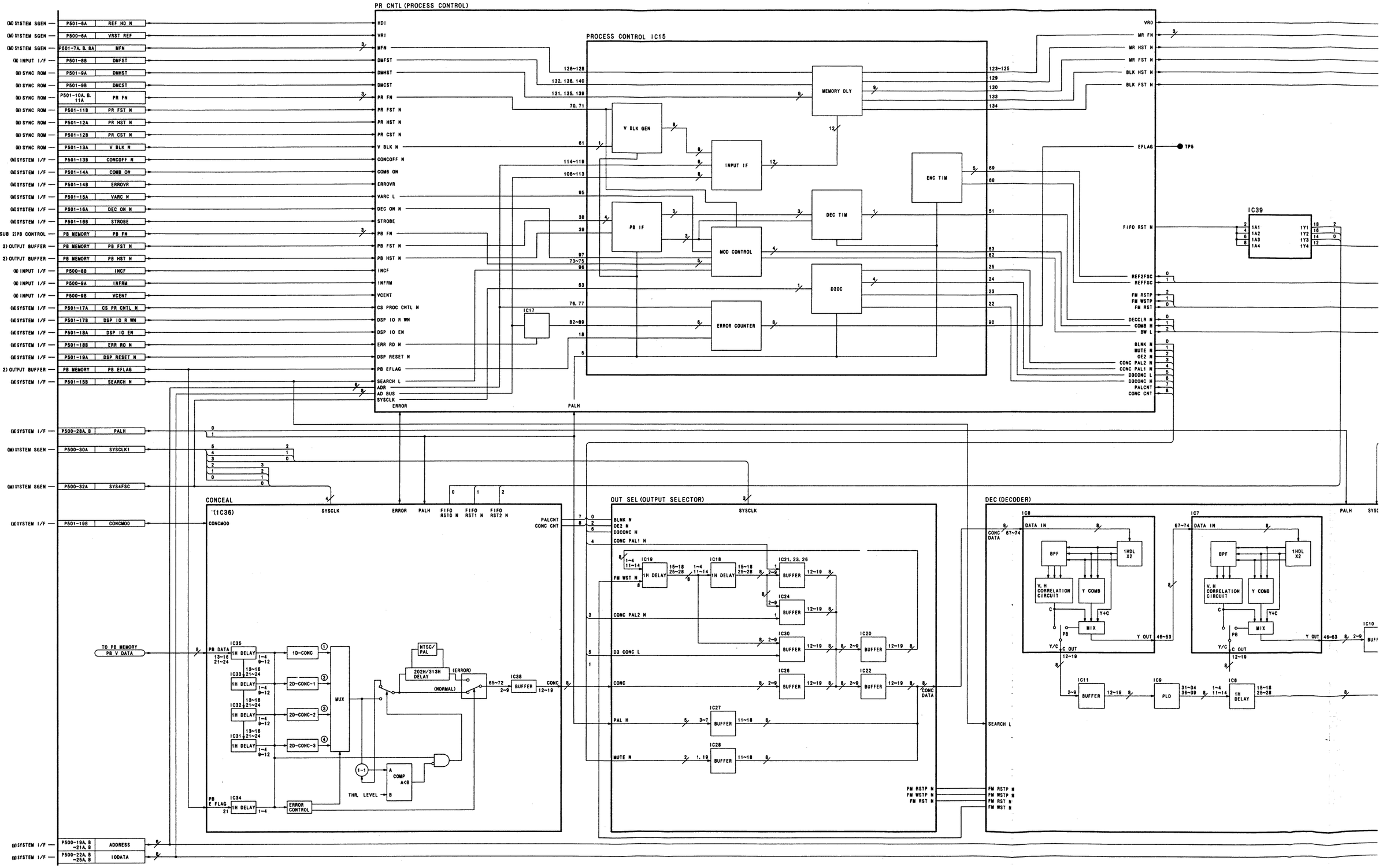

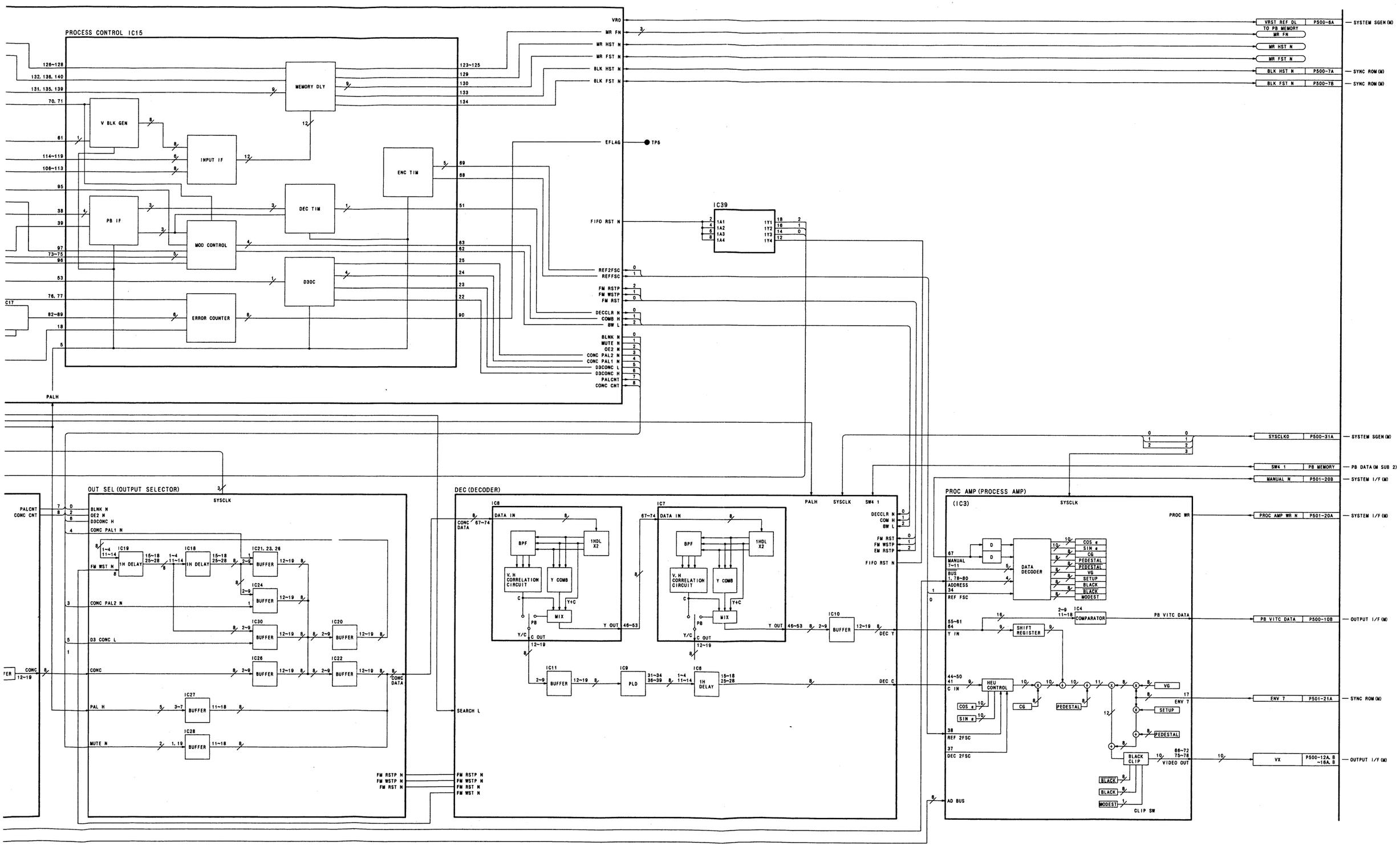
PROCESS CONTROL IC15
MEMORY DLY
V BLK GEN
INPUT I/F
ENC TIM
DEC TIM
PB I/F
MOD CONTROL
D30C
ERROR COUNTER
VRO
MR FN
MR HST N
MR FST N
BLK HST N
BLK FST N
EFLAG
TP5
FIFO RST N
REF2FSC
REFFSC
FM RSTP
FM WSTP
FM RST
DECCLR N
COMB H
BW L
BLNK N
MUTE N
OE2 N
CONC PAL2 N
CONC PAL1 N
D3CONC L
D3CONC H
PALCNT
CONC CNT
PALH
IC39
VRST REF DL
TO PB MEMORY
SYSCLKO
SW4 1
MANUAL N
PROC AMP WR N
PB VITC DATA
ENV 7
VX
SYSTEM SGEN (M)
PB DATA (M SUB 2)
SYSTEM I/F (M)
SYNC ROM (M)
OUTPUT I/F (M)
OUT SEL (OUTPUT SELECTOR)
DEC (DECODER)
PROC AMP (PROCESS AMP)
(IC3)
SYSCLK
SEARCH L
FM RSTP N
FM WSTP N
FM RST N
FM WST N
DATA IN
BPF
1HDL X2
V. H CORRELATION CIRCUIT
Y COMB
MIX
1H DELAY
BUFFER
PLD
DATA DECODER
SHIFT REGISTER
COMPARATOR
HEU CONTROL
BLACK CLIP
VIDEO OUT
AD BUS
CLIP SW

AUDIO D/A (S8) BLOCK DIAGRAM

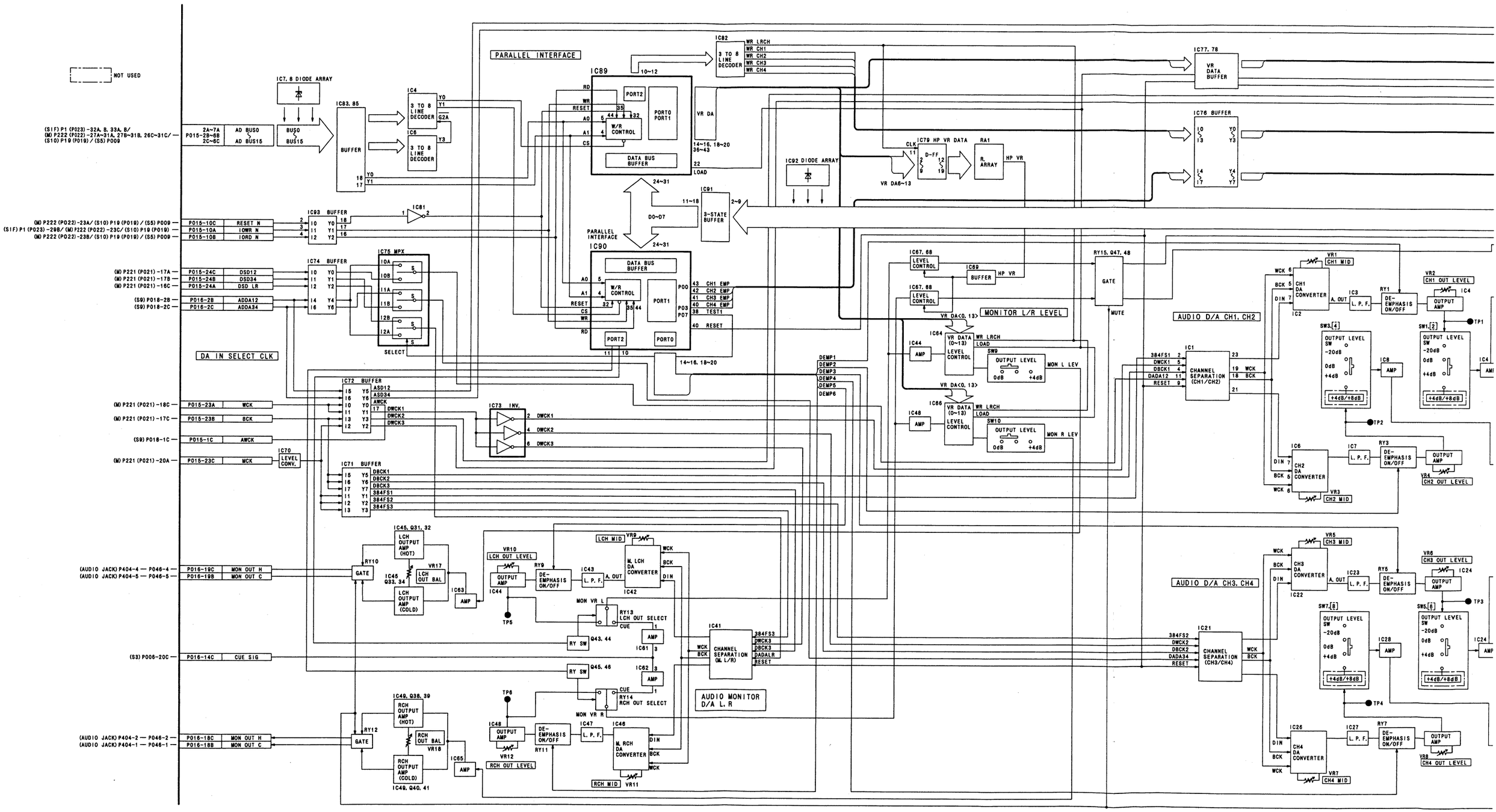

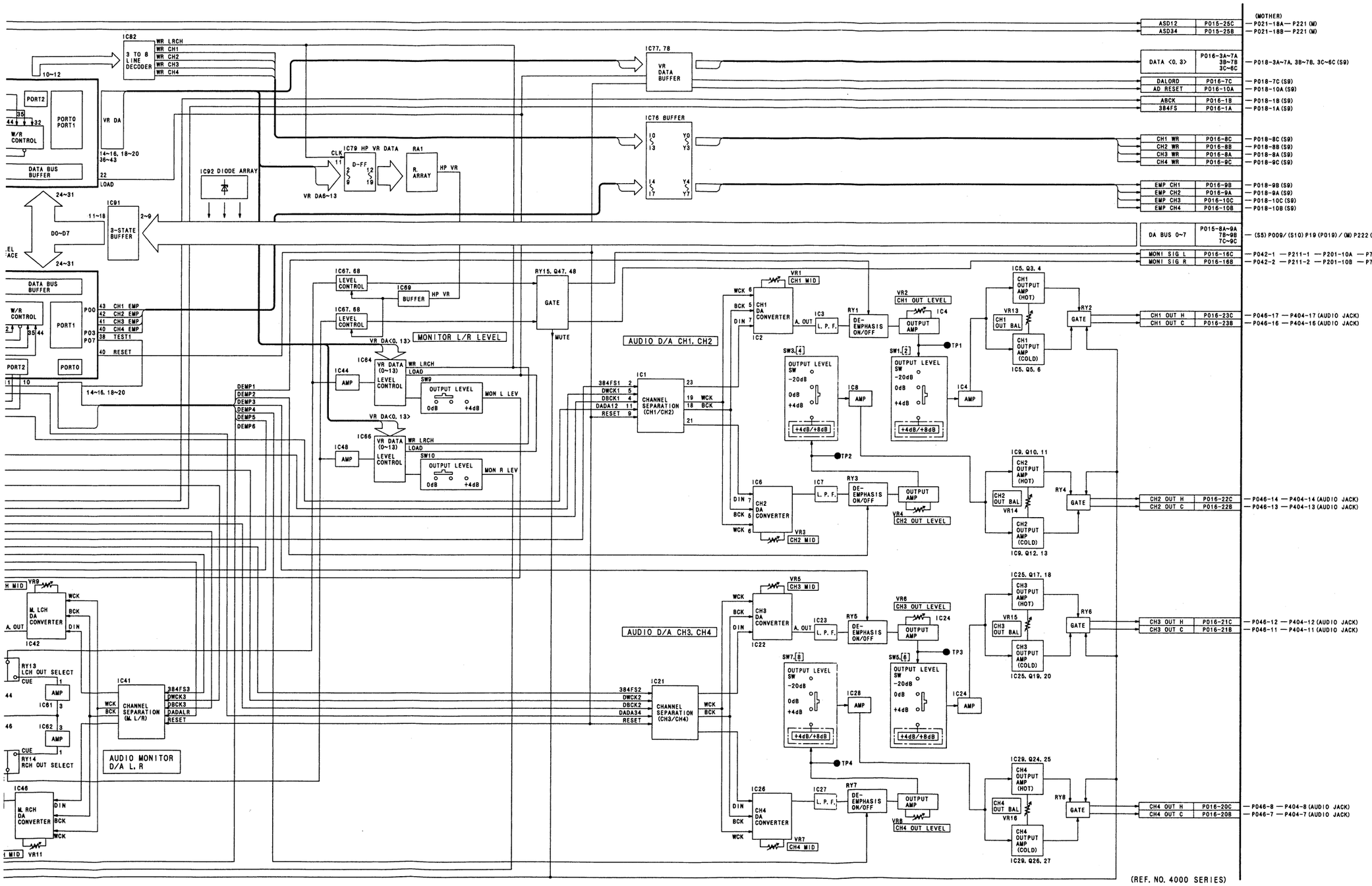
IC82
3 TO 8 LINE DECODER
WR LRCH
WR CH1
WR CH2
WR CH3
WR CH4
10~12
PORT2
PORT0
PORT1
W/R CONTROL
DATA BUS BUFFER
VR DA
14~16, 18~20
36~43
22
LOAD
24~31
IC92 DIODE ARRAY
IC79 HP VR DATA
CLK
D-FF
RA1
R. ARRAY
HP VR
VR DA6~13
IC91
11~18
2~9
3-STATE BUFFER
D0~D7
IC77, 78
VR DATA BUFFER
IC76 BUFFER
ASD12
ASD34
DATA <0, 3>
DALORD
AD RESET
ABCK
384FS
CH1 WR
CH2 WR
CH3 WR
CH4 WR
EMP CH1
EMP CH2
EMP CH3
EMP CH4
DA BUS 0~7
MON1 SIG L
MON1 SIG R
(MOTHER)
P021-18A — P221 (M)
P021-18B — P221 (M)
P016-3A~7A
3B~7B
3C~6C
P018-3A~7A, 3B~7B, 3C~6C (S9)
P016-7C
P018-7C (S9)
P016-10A
P018-10A (S9)
P016-1B
P018-1B (S9)
P016-1A
P018-1A (S9)
P016-8C
P018-8C (S9)
P016-8B
P018-8B (S9)
P016-8A
P018-8A (S9)
P016-9C
P018-9C (S9)
P016-9B
P018-9B (S9)
P016-9A
P018-9A (S9)
P016-10C
P018-10C (S9)
P016-10B
P018-10B (S9)
P015-8A~9A
7B~9B
7C~9C
(S5) P009/ (S10) P19 (P019) / (M) P222 (P022) -24A~26A, 24B~26B, 24C, 25C/ (S1F) P1 (P023) -30A, B, 31A, B
P016-16C
P042-1 — P211-1 — P201-10A — P701-10A (MECH 1/F)
P016-16B
P042-2 — P211-2 — P201-10B — P701-10B (MECH 1/F)
IC67, 68
LEVEL CONTROL
IC69
BUFFER
HP VR
RY15, Q47, 48
GATE
MUTE
MONITOR L/R LEVEL
VR DA<0, 13>
IC64
VR DATA (0~13)
WR LRCH
LOAD
LEVEL CONTROL
SW9
OUTPUT LEVEL
0dB
+4dB
MON L LEV
IC44
AMP
IC66
SW10
MON R LEV
IC48
DEMP1
DEMP2
DEMP3
DEMP4
DEMP5
DEMP6
AUDIO D/A CH1, CH2
IC1
CHANNEL SEPARATION (CH1/CH2)
384FS1
DWCK1
DBCK1
DADA12
RESET
WCK
BCK
DIN
IC2
CH1 DA CONVERTER
A. OUT
IC3
L. P. F.
RY1
DE-EMPHASIS ON/OFF
VR1
CH1 MID
VR2
CH1 OUT LEVEL
IC4
OUTPUT AMP
TP1
SW3, 4
SW1, 2
OUTPUT LEVEL SW
-20dB
0dB
+4dB
+4dB/+8dB
IC8
IC5, Q3, 4
CH1 OUTPUT AMP (HOT)
VR13
CH1 OUT BAL
CH1 OUTPUT AMP (COLD)
IC5, Q5, 6
RY2
GATE
CH1 OUT H
CH1 OUT C
P046-17 — P404-17 (AUDIO JACK)
P046-16 — P404-16 (AUDIO JACK)
TP2
IC6
CH2 DA CONVERTER
IC7
VR3
CH2 MID
VR4
CH2 OUT LEVEL
IC9, Q10, 11
CH2 OUTPUT AMP (HOT)
VR14
CH2 OUT BAL
CH2 OUTPUT AMP (COLD)
IC9, Q12, 13
RY4
CH2 OUT H
CH2 OUT C
P046-14 — P404-14 (AUDIO JACK)
P046-13 — P404-13 (AUDIO JACK)
AUDIO D/A CH3, CH4
IC21
CHANNEL SEPARATION (CH3/CH4)
384FS2
DWCK2
DBCK2
DADA34
IC22
CH3 DA CONVERTER
IC23
RY5
VR5
CH3 MID
VR6
CH3 OUT LEVEL
IC24
TP3
SW7, 8
SW5, 6
IC28
IC25, Q17, 18
CH3 OUTPUT AMP (HOT)
VR15
CH3 OUT BAL
CH3 OUTPUT AMP (COLD)
IC25, Q19, 20
RY6
CH3 OUT H
CH3 OUT C
P046-12 — P404-12 (AUDIO JACK)
P046-11 — P404-11 (AUDIO JACK)
TP4
IC26
CH4 DA CONVERTER
IC27
RY7
VR7
CH4 MID
VR8
CH4 OUT LEVEL
IC29, Q24, 25
CH4 OUTPUT AMP (HOT)
VR16
CH4 OUT BAL
CH4 OUTPUT AMP (COLD)
IC29, Q26, 27
RY8
CH4 OUT H
CH4 OUT C
P046-8 — P404-8 (AUDIO JACK)
P046-7 — P404-7 (AUDIO JACK)
IC42
M. LCH DA CONVERTER
VR9
RY13
LCH OUT SELECT
CUE
IC41
CHANNEL SEPARATION (M. L/R)
384FS3
DWCK3
DBCK3
DADALR
IC61
IC62
RY14
RCH OUT SELECT
AUDIO MONITOR D/A L, R
IC46
M. RCH DA CONVERTER
VR11
(REF. NO. 4000 SERIES)

AUDIO A/D (S9) BLOCK DIAGRAM

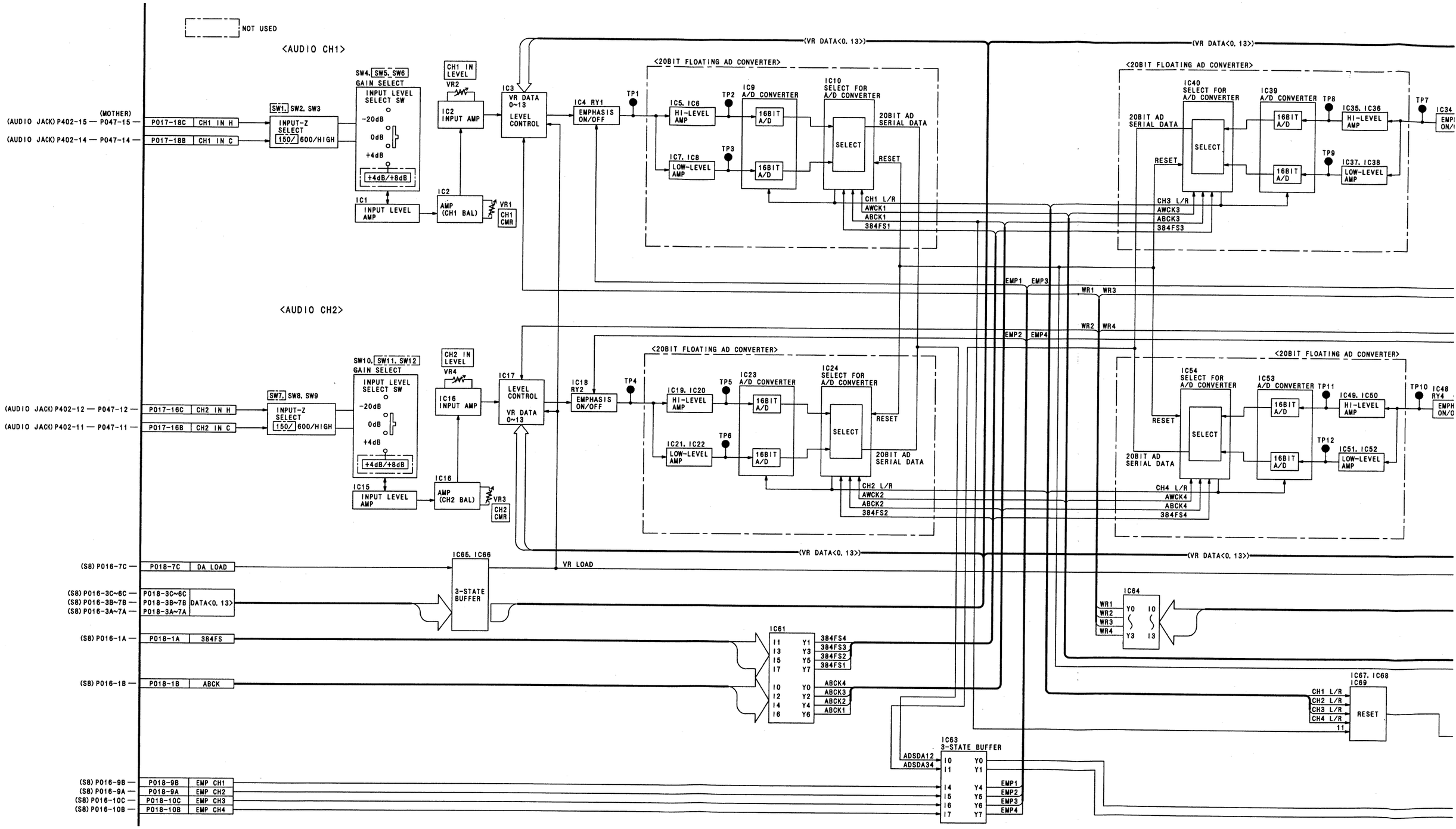

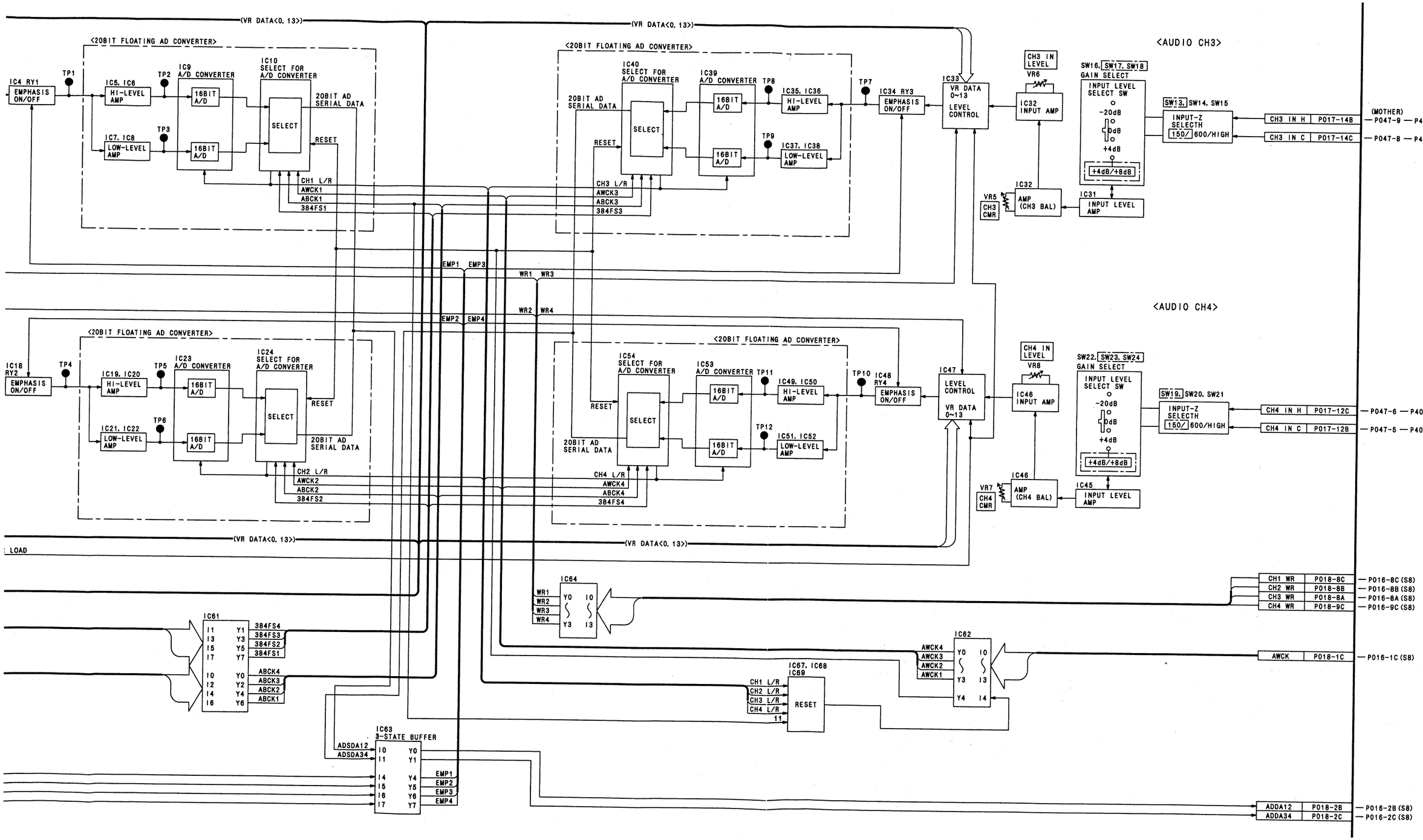
<20BIT FLOATING AD CONVERTER>
(VR DATA<0. 13>)
IC4 RY1
EMPHASIS ON/OFF
TP1
IC5. IC6
HI-LEVEL AMP
IC7. IC8
LOW-LEVEL AMP
TP2
TP3
IC9 A/D CONVERTER
16BIT A/D
IC10 SELECT FOR A/D CONVERTER
SELECT
20BIT AD SERIAL DATA
RESET
CH1 L/R
AWCK1
ABCK1
384FS1
IC40 SELECT FOR A/D CONVERTER
IC39 A/D CONVERTER
TP8
TP9
IC35. IC36
IC37. IC38
CH3 L/R
AWCK3
ABCK3
384FS3
TP7
IC34 RY3
IC33
VR DATA 0~13
LEVEL CONTROL
<AUDIO CH3>
CH3 IN LEVEL
VR6
IC32 INPUT AMP
SW16. SW17. SW18
GAIN SELECT
INPUT LEVEL SELECT SW
-20dB
0dB
+4dB
+4dB/+8dB
SW13. SW14. SW15
INPUT-Z SELECTH
150/600/HIGH
CH3 IN H P017-14B
CH3 IN C P017-14C
(MOTHER)
P047-9 — P402-9 (AUDIO JACK)
P047-8 — P402-8 (AUDIO JACK)
VR5
CH3 CMR
IC32 AMP (CH3 BAL)
IC31 INPUT LEVEL AMP
EMP1 EMP3
WR1 WR3
WR2 WR4
EMP2 EMP4
<AUDIO CH4>
IC18 RY2
IC19. IC20
IC21. IC22
IC23 A/D CONVERTER
IC24 SELECT FOR A/D CONVERTER
CH2 L/R
AWCK2
ABCK2
384FS2
IC54 SELECT FOR A/D CONVERTER
IC53 A/D CONVERTER
TP11
TP12
IC49. IC50
IC51. IC52
CH4 L/R
AWCK4
ABCK4
384FS4
TP10
IC48 RY4
IC47
LEVEL CONTROL
VR DATA 0~13
CH4 IN LEVEL
VR8
IC46 INPUT AMP
SW22. SW23. SW24
GAIN SELECT
SW19. SW20. SW21
CH4 IN H P017-12C
CH4 IN C P017-12B
P047-6 — P402-6 (AUDIO JACK)
P047-5 — P402-5 (AUDIO JACK)
VR7
CH4 CMR
IC46 AMP (CH4 BAL)
IC45 INPUT LEVEL AMP
LOAD
IC64
WR1
WR2
WR3
WR4
CH1 WR P018-8C
CH2 WR P018-8B
CH3 WR P018-8A
CH4 WR P018-9C
P016-8C (S8)
P016-8B (S8)
P016-8A (S8)
P016-9C (S8)
IC61
384FS4
384FS3
384FS2
384FS1
ABCK4
ABCK3
ABCK2
ABCK1
IC62
AWCK4
AWCK3
AWCK2
AWCK1
AWCK P018-1C
P016-1C (S8)
IC67. IC68
IC69
RESET
CH1 L/R
CH2 L/R
CH3 L/R
CH4 L/R
IC63 3-STATE BUFFER
ADSDA12
ADSDA34
EMP1
EMP2
EMP3
EMP4
ADDA12 P018-2B
ADDA34 P018-2C
P016-2B (S8)
P016-2C (S8)

VIDEO A/D (S10) BLOCK DIAGRAM

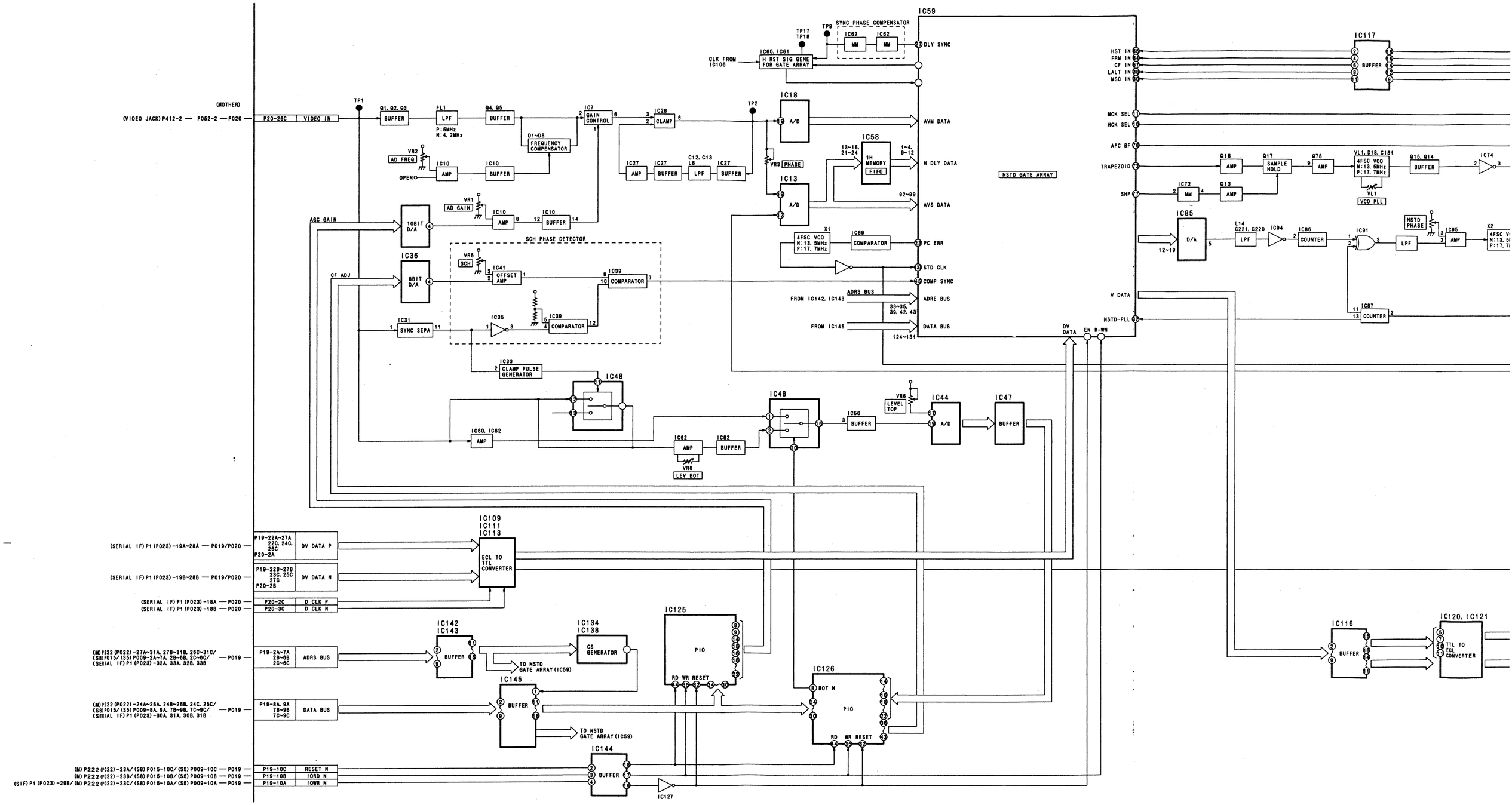

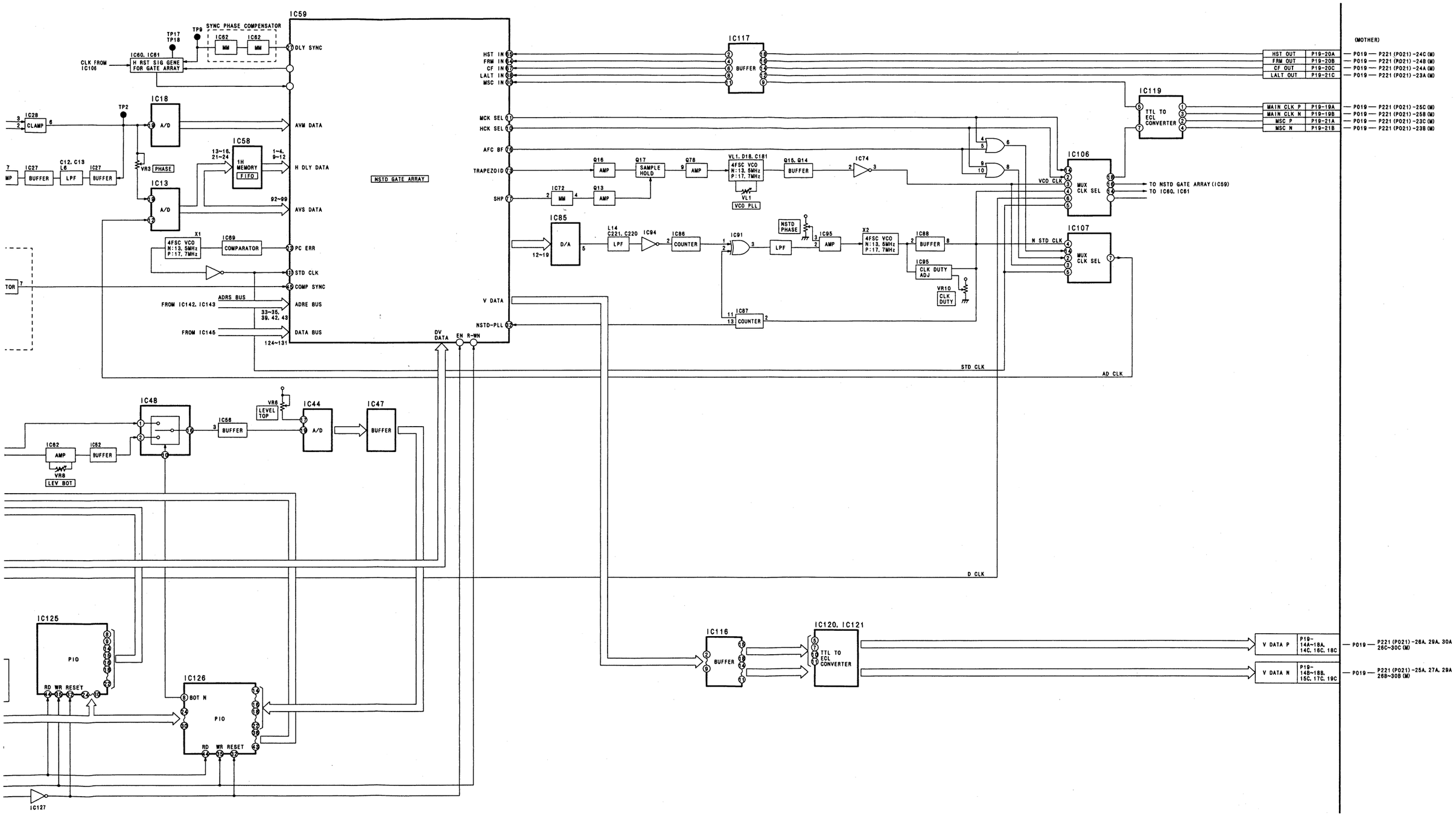
IC59
SYNC PHASE COMPENSATOR
IC62
IC62
TP9
TP17
TP18
CLK FROM IC106
IC60, IC61
H RST SIG GENE FOR GATE ARRAY
27 DLY SYNC
IC18
TP2
IC28
CLAMP
A/D
AVM DATA
IC58
1H MEMORY FIFO
13~16, 21~24
1~4, 9~12
H DLY DATA
VR3 PHASE
IC27
BUFFER
C12, C13
L6
LPF
IC27
BUFFER
IC13
A/D
92~99
AVS DATA
X1
4FSC VCO N:13.5MHz P:17.7MHz
IC69
COMPARATOR
23 PC ERR
31 STD CLK
45 COMP SYNC
ADRS BUS
FROM IC142, IC143
33~35, 39, 42, 43
ADRE BUS
FROM IC145
124~131
DATA BUS
NSTD GATE ARRAY
HST IN 69
FRM IN 64
CF IN 67
LALT IN 68
MSC IN 61
IC117
BUFFER
MCK SEL 11
HCK SEL 10
AFC BF 78
TRAPEZOID 73
SHP 77
Q16
AMP
Q17
SAMPLE HOLD
Q78
AMP
VL1, D18, C181
4FSC VCO N:13.5MHz P:17.7MHz
VL1
VCO PLL
Q15, Q14
BUFFER
IC74
IC72
MM
Q13
AMP
IC85
D/A
12~19
L14
C221, C220
LPF
IC94
IC86
COUNTER
IC91
NSTD PHASE
LPF
IC95
AMP
X2
4FSC VCO N:13.5MHz P:17.7MHz
IC88
BUFFER
IC95
CLK DUTY ADJ
VR10
CLK DUTY
IC87
COUNTER
V DATA
NSTD-PLL 62
DV DATA
EN
R-WN
IC106
MUX CLK SEL
VCO CLK
TO NSTD GATE ARRAY (IC59)
TO IC60, IC61
IC107
MUX CLK SEL
N STD CLK
STD CLK
AD CLK
D CLK
IC119
TTL TO ECL CONVERTER
(MOTHER)
HST OUT P19-20A — P019 — P221 (P021) -24C (M)
FRM OUT P19-20B — P019 — P221 (P021) -24B (M)
CF OUT P19-20C — P019 — P221 (P021) -24A (M)
LALT OUT P19-21C — P019 — P221 (P021) -23A (M)
MAIN CLK P P19-19A — P019 — P221 (P021) -25C (M)
MAIN CLK N P19-19B — P019 — P221 (P021) -25B (M)
MSC P P19-21A — P019 — P221 (P021) -23C (M)
MSC N P19-21B — P019 — P221 (P021) -23B (M)
IC48
IC62
AMP
IC62
BUFFER
VR8
LEV BOT
IC56
BUFFER
VR6
LEVEL TOP
IC44
A/D
IC47
BUFFER
IC125
PIO
RD WR RESET
IC126
BOT N
PIO
RD WR RESET
IC127
IC116
BUFFER
IC120, IC121
TTL TO ECL CONVERTER
V DATA P P19-14A~18A, 14C, 16C, 18C — P019 — P221 (P021) -26A, 29A, 30A 26C~30C (M)
V DATA N P19-14B~18B, 15C, 17C, 19C — P019 — P221 (P021) -25A, 27A, 29A 26B~30B (M)

VIDEO D/A (S10) BLOCK DIAGRAM

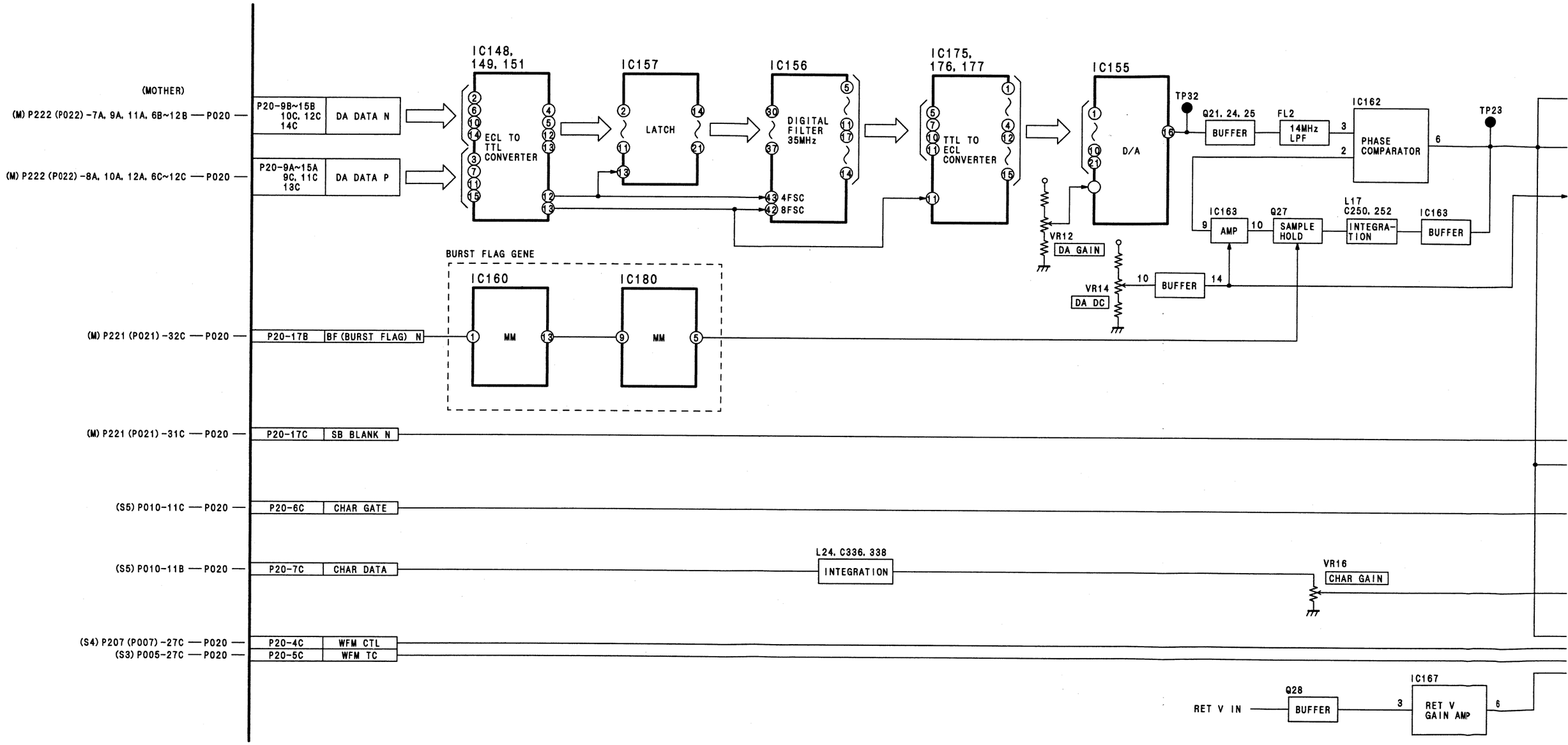

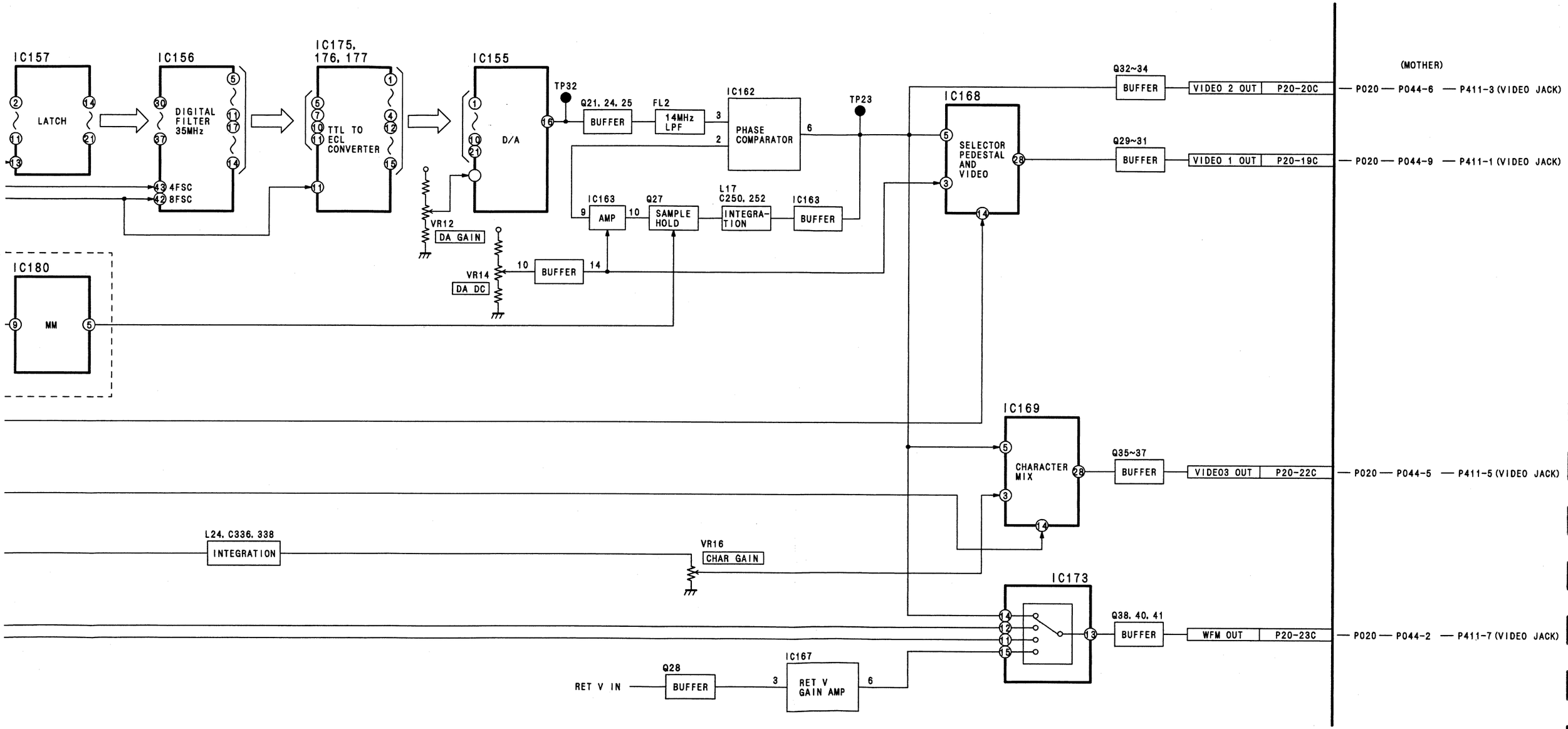
IC157
LATCH
IC156
DIGITAL FILTER 35MHz
IC175, 176, 177
TTL TO ECL CONVERTER
IC155
D/A
TP32
Q21, 24, 25
BUFFER
FL2
14MHz LPF
IC162
PHASE COMPARATOR
TP23
IC168
SELECTOR PEDESTAL AND VIDEO
Q32~34
BUFFER
VIDEO 2 OUT
P20-20C
(MOTHER)
P020
P044-6
P411-3 (VIDEO JACK)
Q29~31
BUFFER
VIDEO 1 OUT
P20-19C
P020
P044-9
P411-1 (VIDEO JACK)
43 4FSC
42 8FSC
VR12
DA GAIN
IC163
AMP
Q27
SAMPLE HOLD
L17
C250, 252
INTEGRA-TION
IC163
BUFFER
IC180
MM
VR14
DA DC
BUFFER
IC169
CHARACTER MIX
Q35~37
BUFFER
VIDEO3 OUT
P20-22C
P020
P044-5
P411-5 (VIDEO JACK)
L24, C336, 338
INTEGRATION
VR16
CHAR GAIN
IC173
Q38, 40, 41
BUFFER
WFM OUT
P20-23C
P020
P044-2
P411-7 (VIDEO JACK)
RET V IN
Q28
BUFFER
IC167
RET V GAIN AMP

TC/CUE AUDIO (S3) BLOCK DIAGRAM

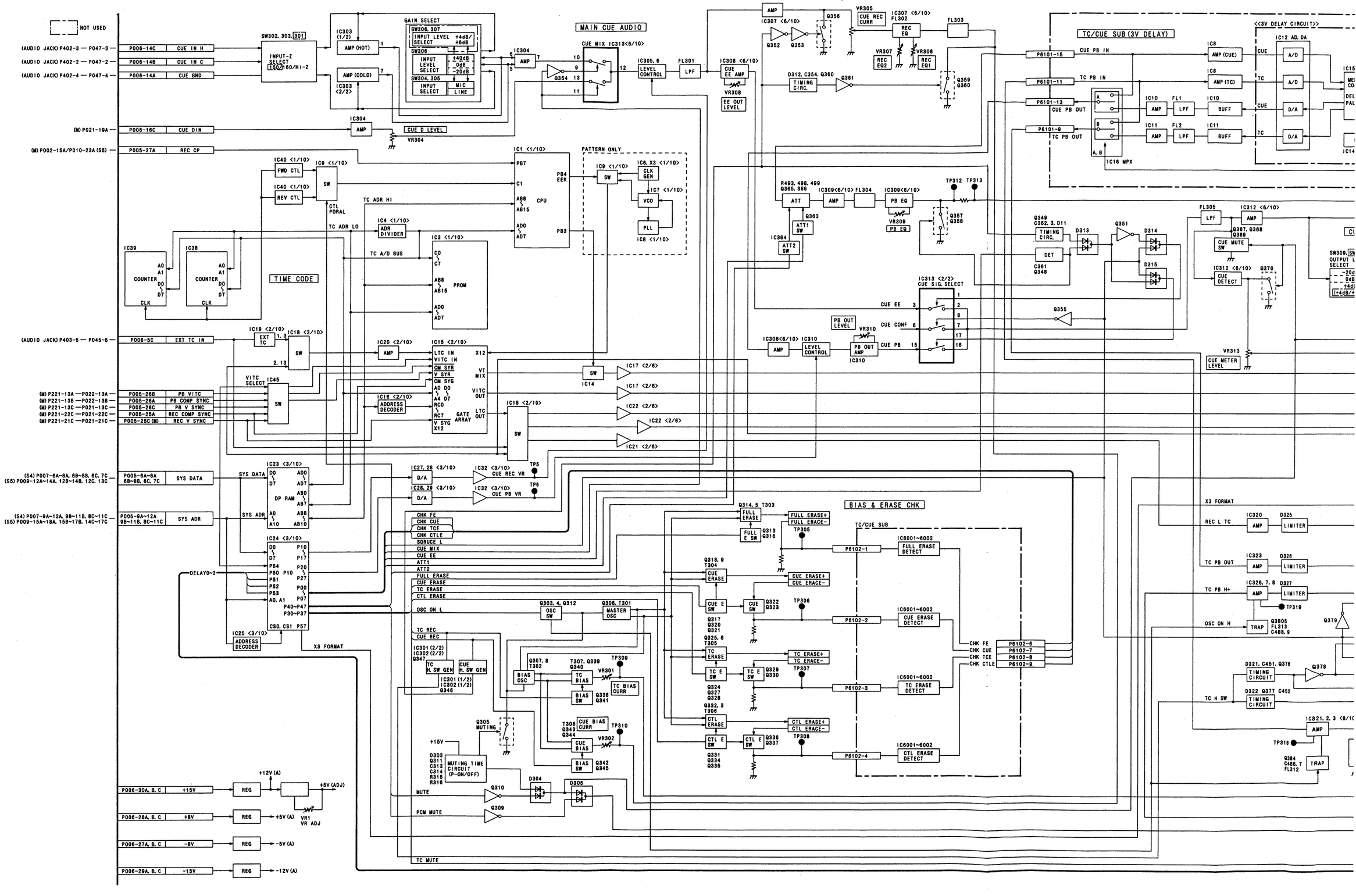

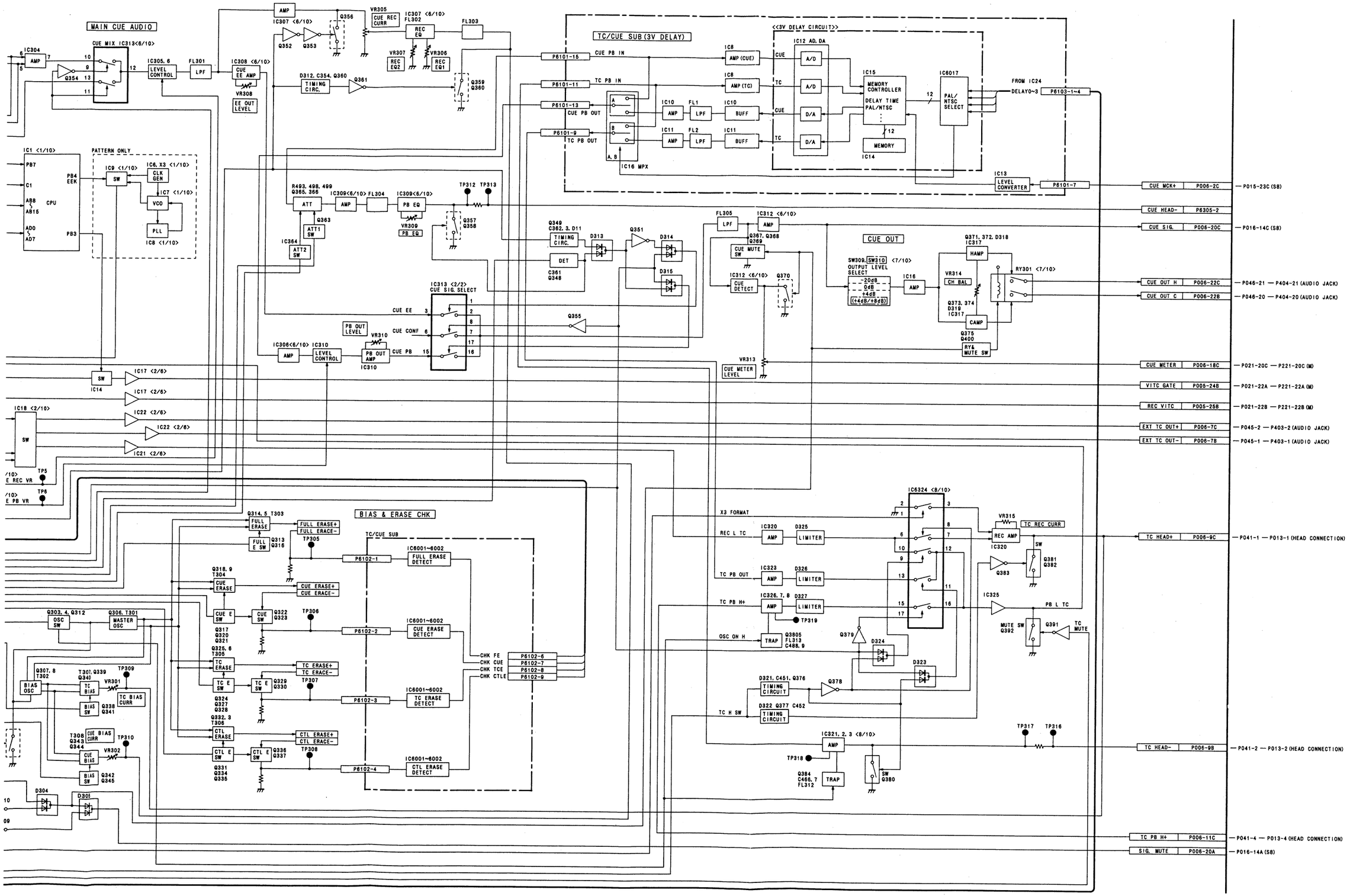
MAIN CUE AUDIO
CUE MIX IC313<6/10>
IC304
AMP
Q354
IC305, 6
LEVEL CONTROL
FL301
LPF
IC308 <6/10>
CUE EE AMP
VR308
EE OUT LEVEL
AMP
IC307 <6/10>
Q352
Q353
Q356
VR305
CUE REC CURR
IC307 <6/10>
FL302
REC EQ
FL303
VR307
REC EQ2
VR306
REC EQ1
D312, C354, Q360
TIMING CIRC.
Q361
Q359
Q360
TC/CUE SUB (3V DELAY)
<<3V DELAY CIRCUIT>>
P6101-15
CUE PB IN
P6101-11
TC PB IN
P6101-13
CUE PB OUT
P6101-9
TC PB OUT
A
B
A, B
IC16 MPX
IC10
AMP
FL1
LPF
IC10
BUFF
IC11
AMP
FL2
LPF
IC11
BUFF
IC8
AMP (CUE)
IC8
AMP (TC)
IC12 AD, DA
CUE
TC
CUE
TC
A/D
A/D
D/A
D/A
IC15
MEMORY CONTROLLER
DELAY TIME
PAL/NTSC
12
MEMORY
IC14
IC6017
PAL/ NTSC SELECT
FROM IC24
DELAY0~3
P6103-1~4
IC13
LEVEL CONVERTER
P6101-7
CUE MCK+
P006-2C
— P015-23C (S8)
CUE HEAD-
P6305-2
CUE SIG.
P006-20C
— P016-14C (S8)
IC1 <1/10>
PB7
C1
AB8 ~ AB15
AD0 ~ AD7
CPU
PB4
EEK
PB3
PATTERN ONLY
IC9 <1/10>
SW
IC6, X3 <1/10>
CLK GEN
IC7 <1/10>
VCO
PLL
IC8 <1/10>
R493, 498, 499
Q365, 366
ATT
IC309<6/10>
AMP
FL304
IC309<6/10>
PB EQ
VR309
PB EQ
TP312
TP313
Q357
Q358
Q363
ATT1 SW
IC364
ATT2 SW
Q349
C362, 3, D11
TIMING CIRC.
DET
C361
Q348
D313
Q351
D314
D315
FL305
LPF
IC312 <6/10>
AMP
Q367, Q368
Q369
CUE MUTE SW
IC312 <6/10>
CUE DETECT
Q370
CUE OUT
SW309, SW310 <7/10>
OUTPUT LEVEL SELECT
-20dB
0dB
+4dB
(+4dB/+8dB)
IC16
AMP
Q371, 372, D318
IC317
HAMP
VR314
CH BAL
Q373, 374
D319
IC317
CAMP
Q375
Q400
RY&MUTE SW
RY301 <7/10>
CUE OUT H
P006-22C
— P046-21 — P404-21 (AUDIO JACK)
CUE OUT C
P006-22B
— P046-20 — P404-20 (AUDIO JACK)
IC313 <2/2>
CUE SIG. SELECT
CUE EE
CUE CONF
CUE PB
Q355
PB OUT LEVEL
VR310
IC306<6/10>
AMP
IC310
LEVEL CONTROL
PB OUT AMP
IC310
VR313
CUE METER LEVEL
CUE METER
P006-18C
— P021-20C — P221-20C (M)
VITC GATE
P005-24B
— P021-22A — P221-22A (M)
REC VITC
P005-25B
— P021-22B — P221-22B (M)
EXT TC OUT+
P006-7C
— P045-2 — P403-2 (AUDIO JACK)
EXT TC OUT-
P006-7B
— P045-1 — P403-1 (AUDIO JACK)
SW
IC14
IC17 <2/6>
IC17 <2/6>
IC22 <2/6>
IC22 <2/6>
IC21 <2/6>
IC18 <2/10>
SW
TP5
TP6
BIAS & ERASE CHK
TC/CUE SUB
Q314, 5 T303
FULL ERASE
FULL E SW
Q313
Q316
FULL ERASE+
FULL ERACE-
TP305
P6102-1
IC6001~6002
FULL ERASE DETECT
Q318, 9
T304
CUE ERASE
CUE E SW
Q317
Q320
Q321
CUE ERASE+
CUE ERACE-
CUE SW
Q322
Q323
TP306
P6102-2
IC6001~6002
CUE ERASE DETECT
Q325, 6
T305
TC ERASE
TC E SW
Q324
Q327
Q328
TC ERASE+
TC ERACE-
TC E SW
Q329
Q330
TP307
P6102-3
IC6001~6002
TC ERASE DETECT
Q332, 3
T306
CTL ERASE
CTL E SW
Q331
Q334
Q335
CTL ERASE+
CTL ERACE-
CTL E SW
Q336
Q337
TP308
P6102-4
IC6001~6002
CTL ERASE DETECT
CHK FE
CHK CUE
CHK TCE
CHK CTLE
P6102-6
P6102-7
P6102-8
P6102-9
Q303, 4, Q312
OSC SW
Q306, T301
MASTER OSC
Q307, 8
T302
BIAS OSC
T301, Q339
Q340
TC BIAS
VR301
TC BIAS CURR
BIAS SW
Q338
Q341
TP309
T305, Q343
Q344
CUE BIAS CURR
CUE BIAS
VR302
BIAS SW
Q342
Q345
TP310
D304
D305
IC6324 <8/10>
X3 FORMAT
REC L TC
TC PB OUT
TC PB H+
OSC ON H
TC H SW
IC320
AMP
D325
LIMITER
IC323
AMP
D326
LIMITER
IC326, 7, 8
AMP
D327
LIMITER
TP319
TRAP
Q3805
FL313
C488, 9
Q379
D324
D323
D321, C451, Q376
TIMING CIRCUIT
Q378
D322 Q377 C452
TIMING CIRCUIT
IC321, 2, 3 <8/10>
AMP
TP318
Q384
C466, 7
FL312
TRAP
SW
Q380
TP317
TP316
VR315
TC REC CURR
REC AMP
IC320
Q383
SW
Q381
Q382
IC325
PB L TC
MUTE SW
Q392
Q391
TC MUTE
TC HEAD+
P006-9C
— P041-1 — P013-1 (HEAD CONNECTION)
TC HEAD-
P006-9B
— P041-2 — P013-2 (HEAD CONNECTION)
TC PB H+
P006-11C
— P041-4 — P013-4 (HEAD CONNECTION)
SIG. MUTE
P006-20A
— P016-14A (S8)

EQ1 (S1) RF BLOCK DIAGRAM

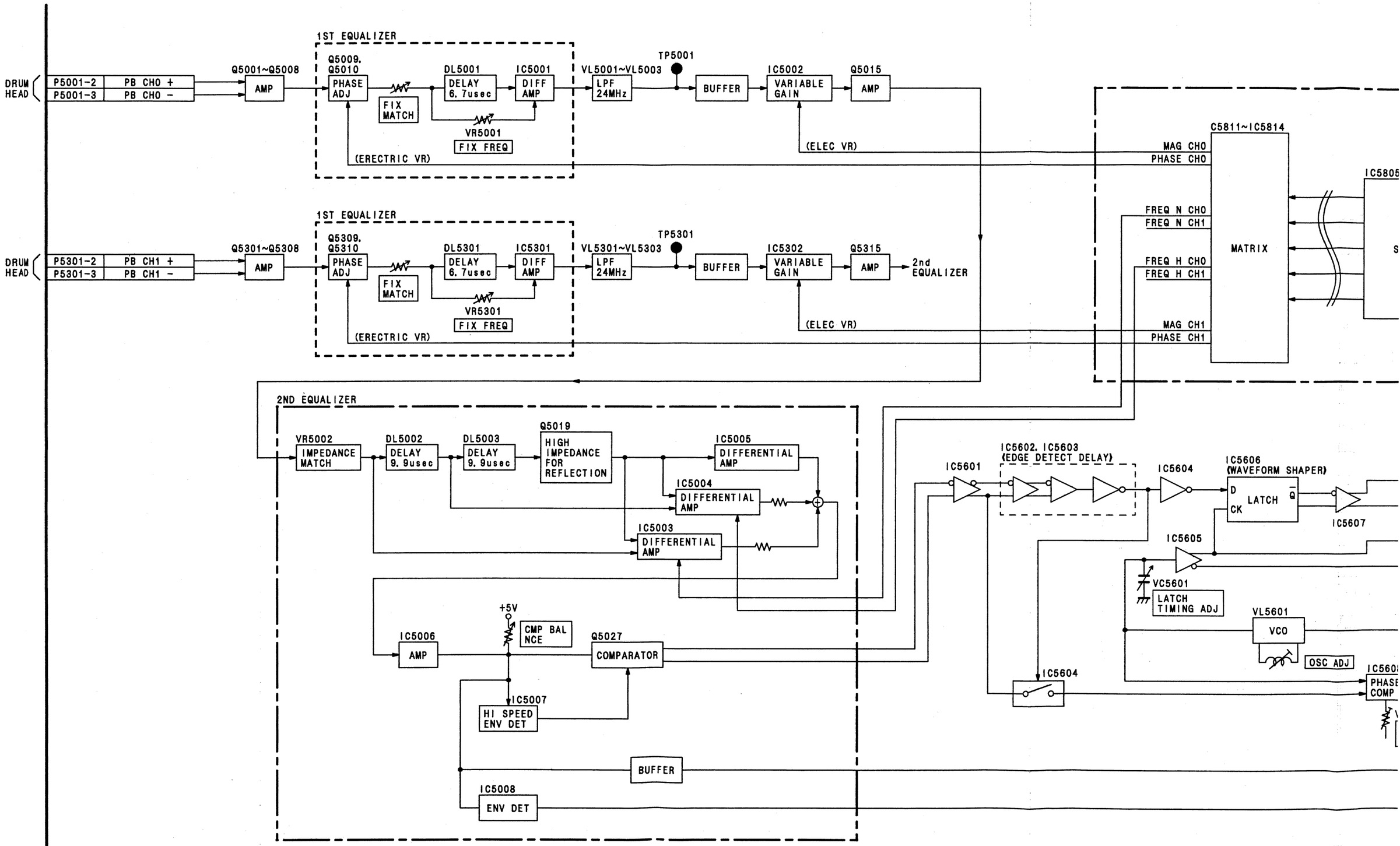

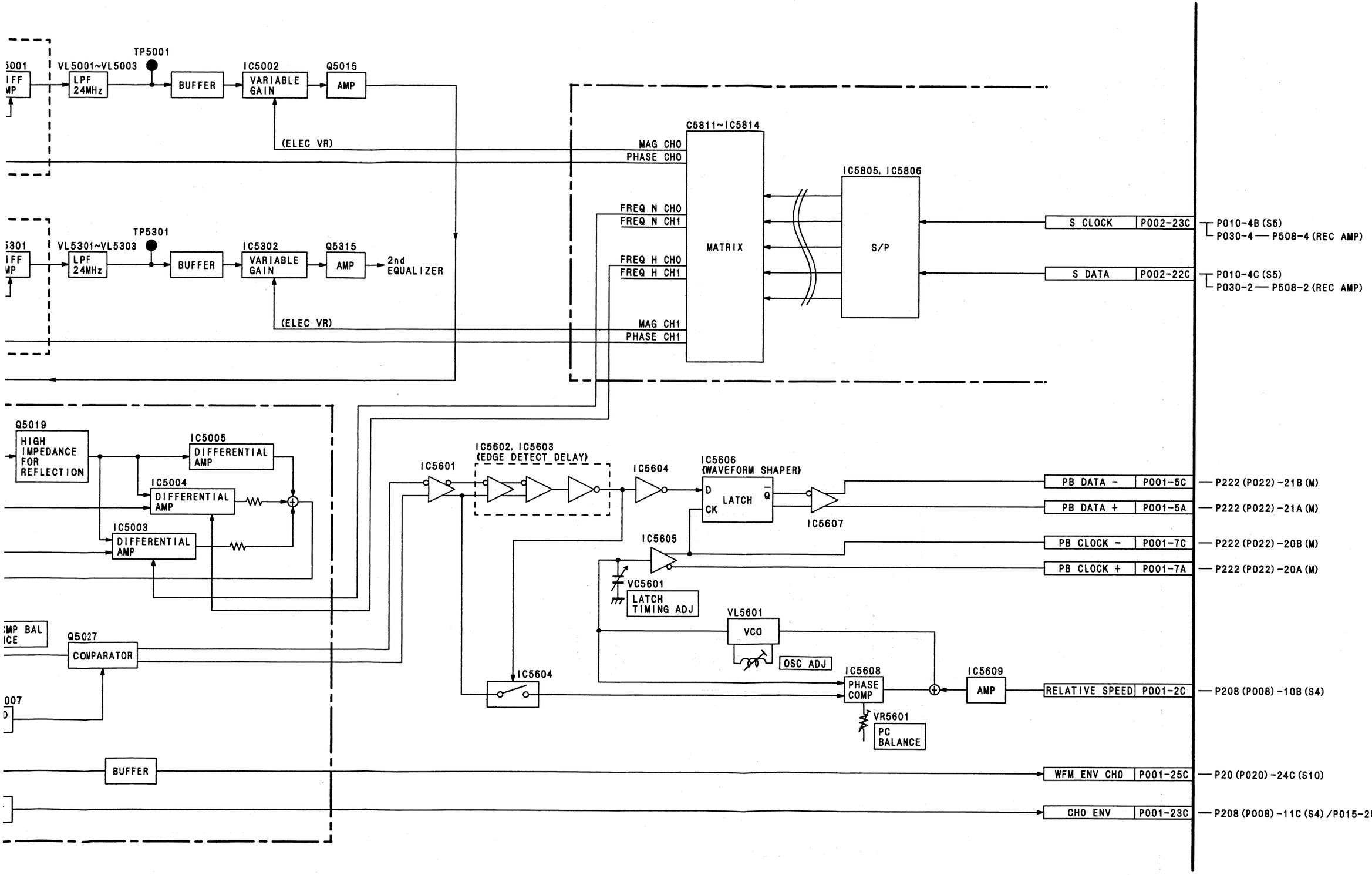

REVERSE SIDE
REC AMP

REC AMP BLOCK DIAGRAM

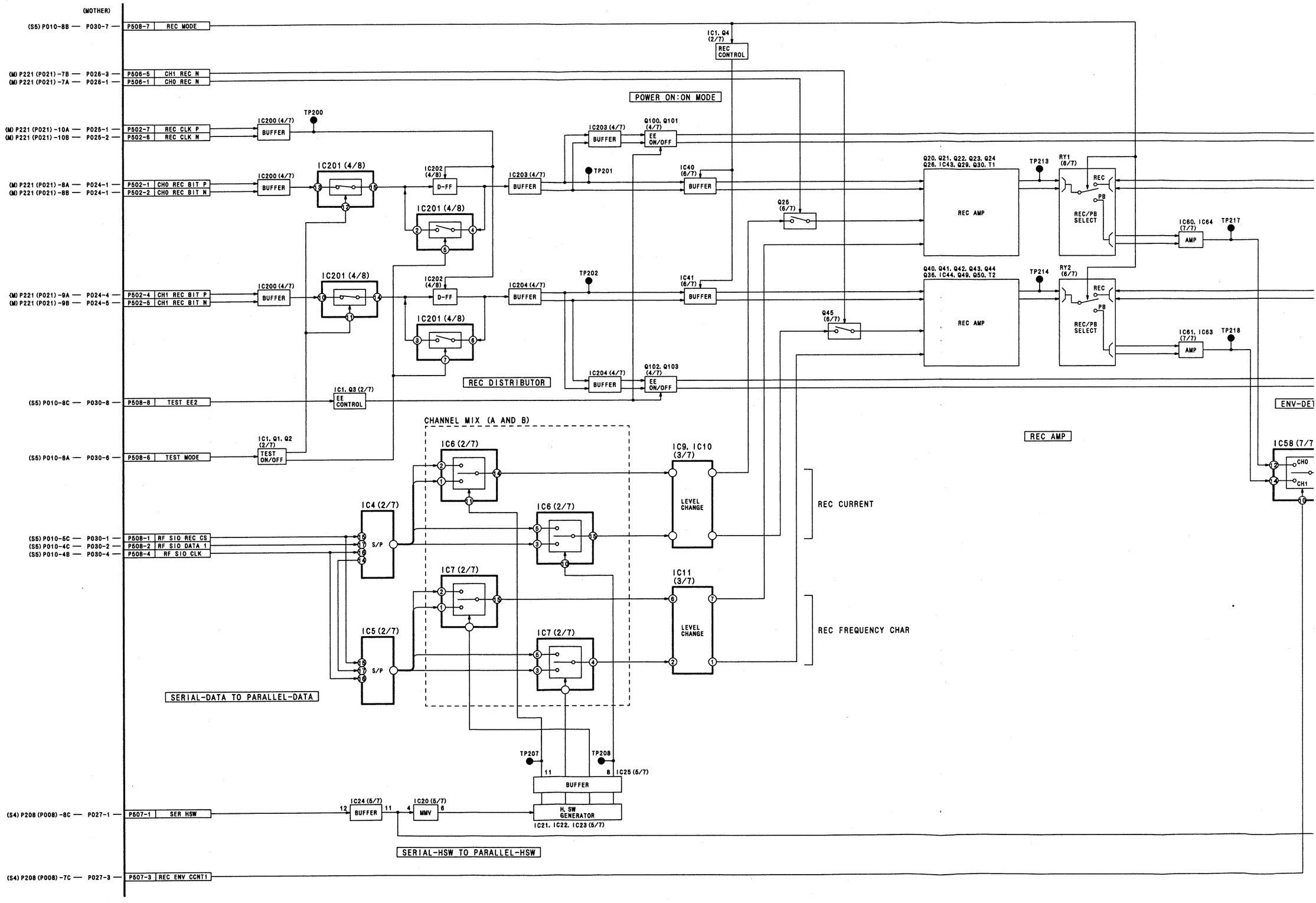

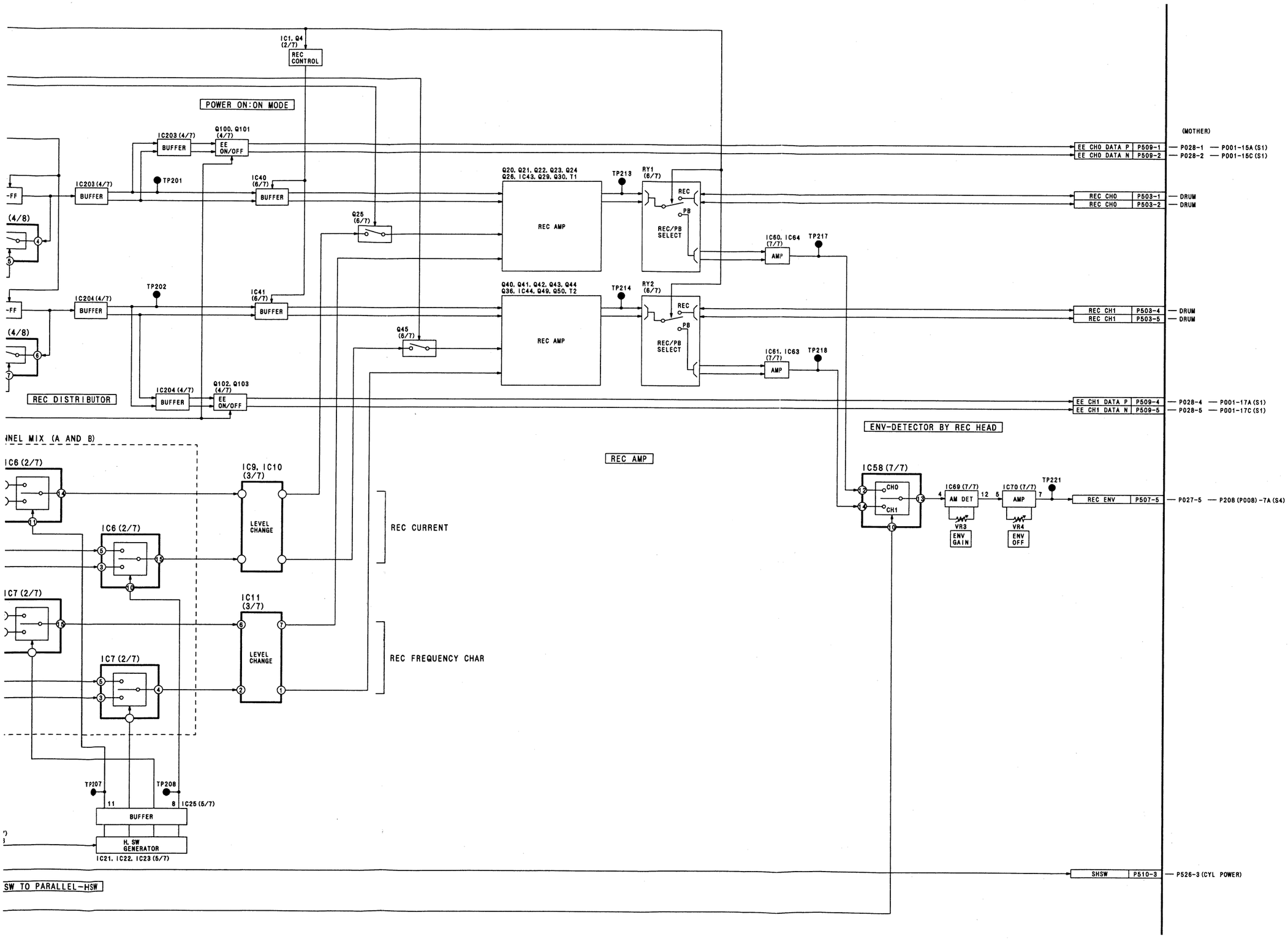
IC1, Q4 (2/7)
REC CONTROL
POWER ON:ON MODE
IC203 (4/7)
BUFFER
Q100, Q101 (4/7)
EE ON/OFF
TP201
IC40 (6/7)
BUFFER
Q20, Q21, Q22, Q23, Q24 Q26, IC43, Q29, Q30, T1
TP213
RY1 (6/7)
REC
PB
REC/PB SELECT
REC AMP
Q25 (6/7)
IC60, IC64 (7/7)
AMP
TP217
IC204 (4/7)
BUFFER
TP202
IC41 (6/7)
BUFFER
Q40, Q41, Q42, Q43, Q44 Q36, IC44, Q49, Q50, T2
TP214
RY2 (6/7)
REC
PB
REC/PB SELECT
REC AMP
Q45 (6/7)
IC61, IC63 (7/7)
AMP
TP218
REC DISTRIBUTOR
IC204 (4/7)
BUFFER
Q102, Q103 (4/7)
EE ON/OFF
(MOTHER)
EE CH0 DATA P P509-1 — P028-1 — P001-15A (S1)
EE CH0 DATA N P509-2 — P028-2 — P001-15C (S1)
REC CH0 P503-1 — DRUM
REC CH0 P503-2 — DRUM
REC CH1 P503-4 — DRUM
REC CH1 P503-5 — DRUM
EE CH1 DATA P P509-4 — P028-4 — P001-17A (S1)
EE CH1 DATA N P509-5 — P028-5 — P001-17C (S1)
ENV-DETECTOR BY REC HEAD
INEL MIX (A AND B)
IC6 (2/7)
IC9, IC10 (3/7)
LEVEL CHANGE
REC CURRENT
IC6 (2/7)
IC7 (2/7)
IC11 (3/7)
LEVEL CHANGE
REC FREQUENCY CHAR
IC7 (2/7)
REC AMP
IC58 (7/7)
CH0
CH1
IC69 (7/7)
AM DET
VR3
ENV GAIN
IC70 (7/7)
AMP
VR4
ENV OFF
TP221
REC ENV P507-5 — P027-5 — P208 (P008) -7A (S4)
TP207
TP208
IC25 (5/7)
BUFFER
H. SW GENERATOR
IC21, IC22, IC23 (5/7)
SHSW P510-3 — P526-3 (CYL POWER)
SW TO PARALLEL-HSW

SERVO CONTROL (INTERFACE) BLOCK DIAGRAM

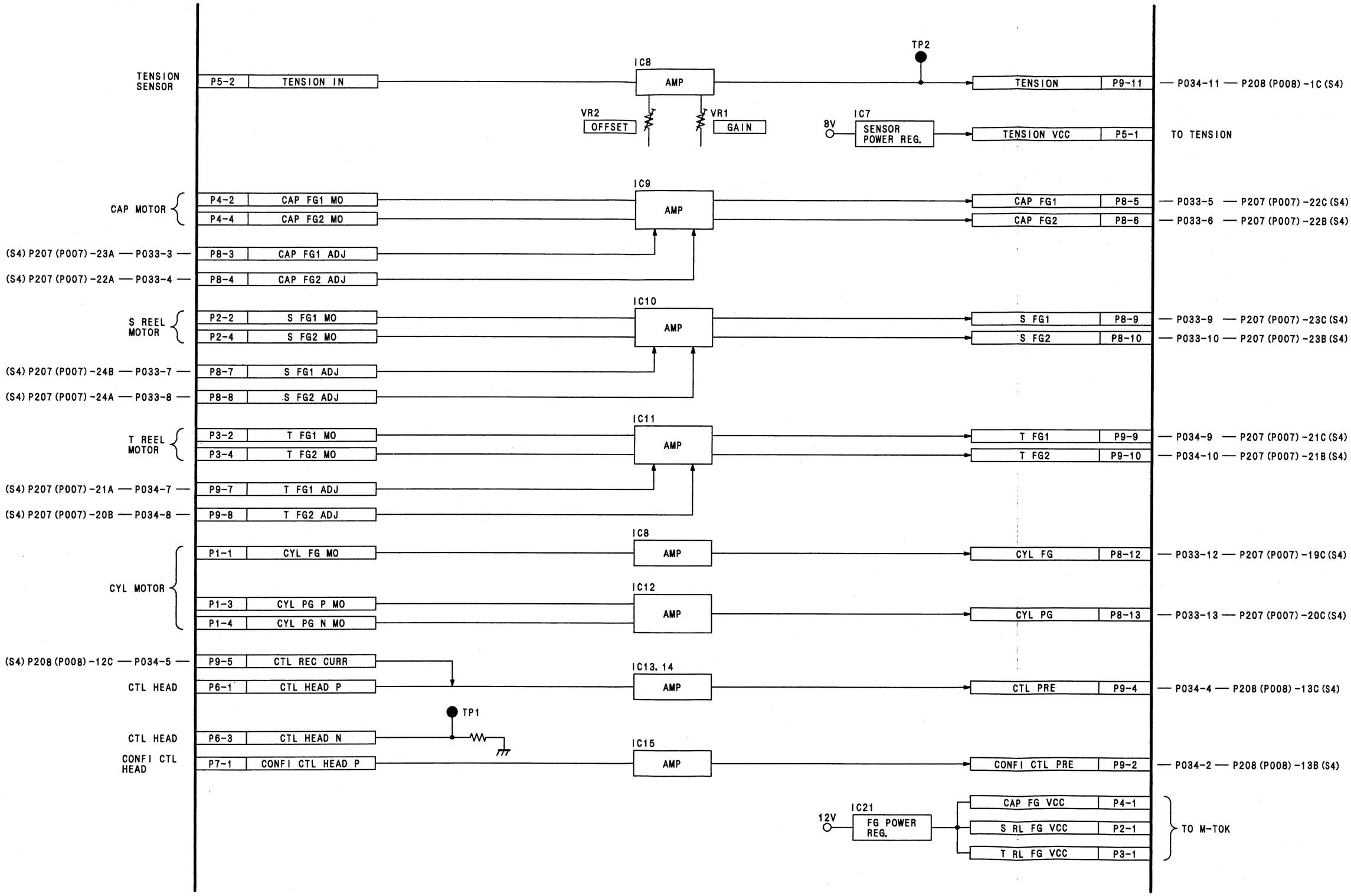

4—1—15

SERVO/AT (S4) OVERALL BLOCK DIAGRAM

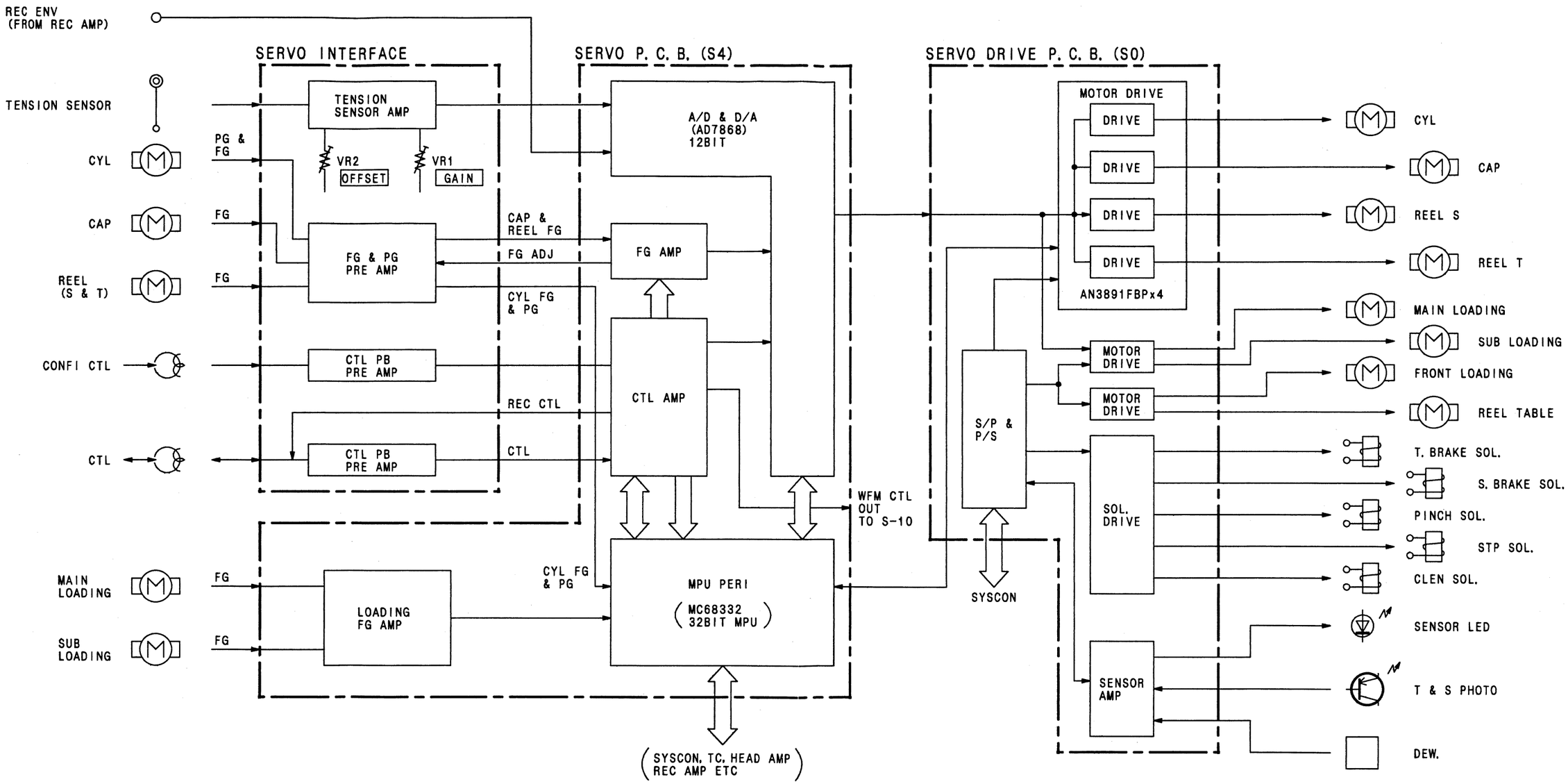

REVERSE SIDE

SERVO CONTROL (INTERFACE)

4—1—16

SERVO/AT (S4) MPU PERI BLOCK DIAGRAM

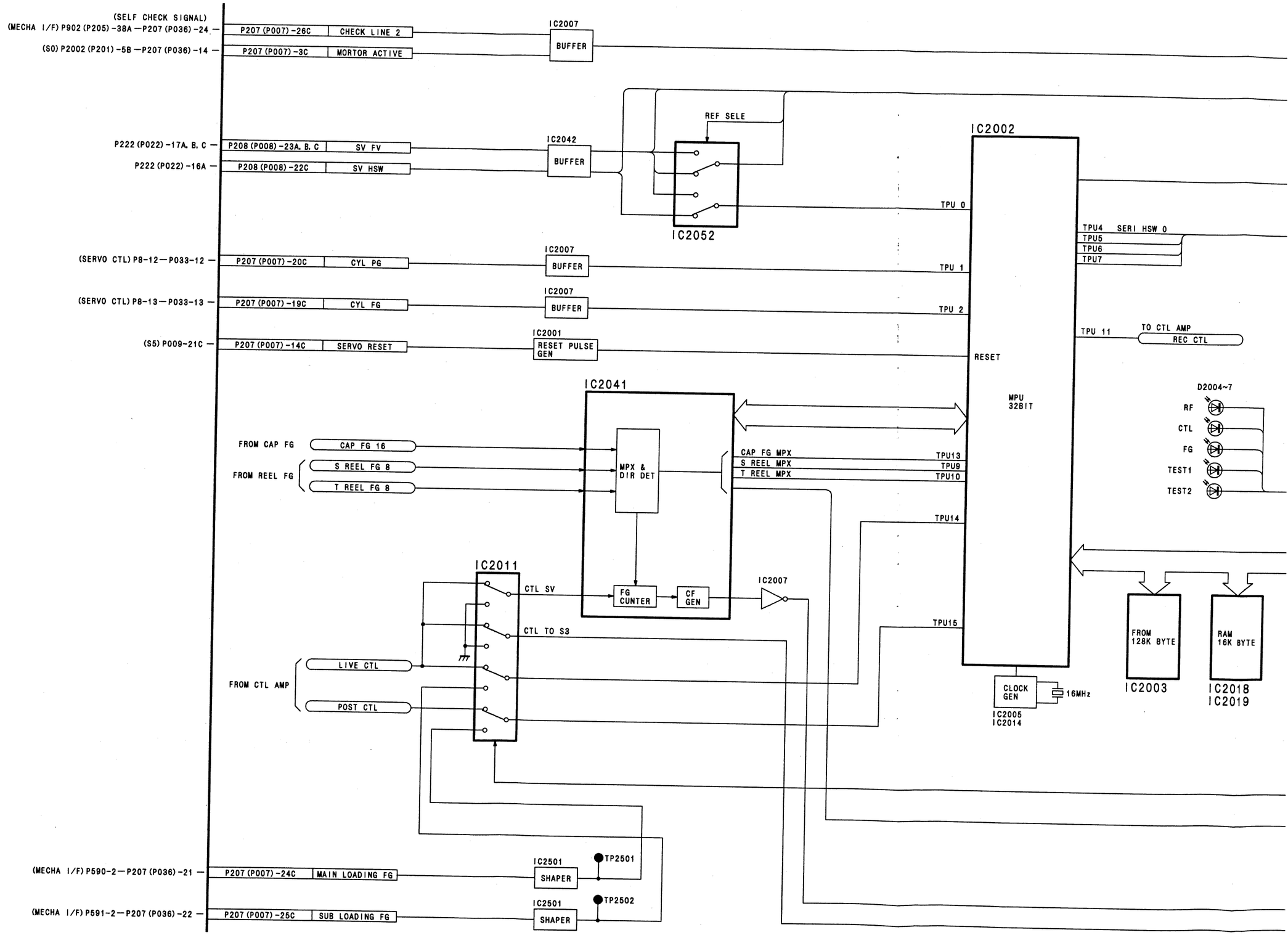

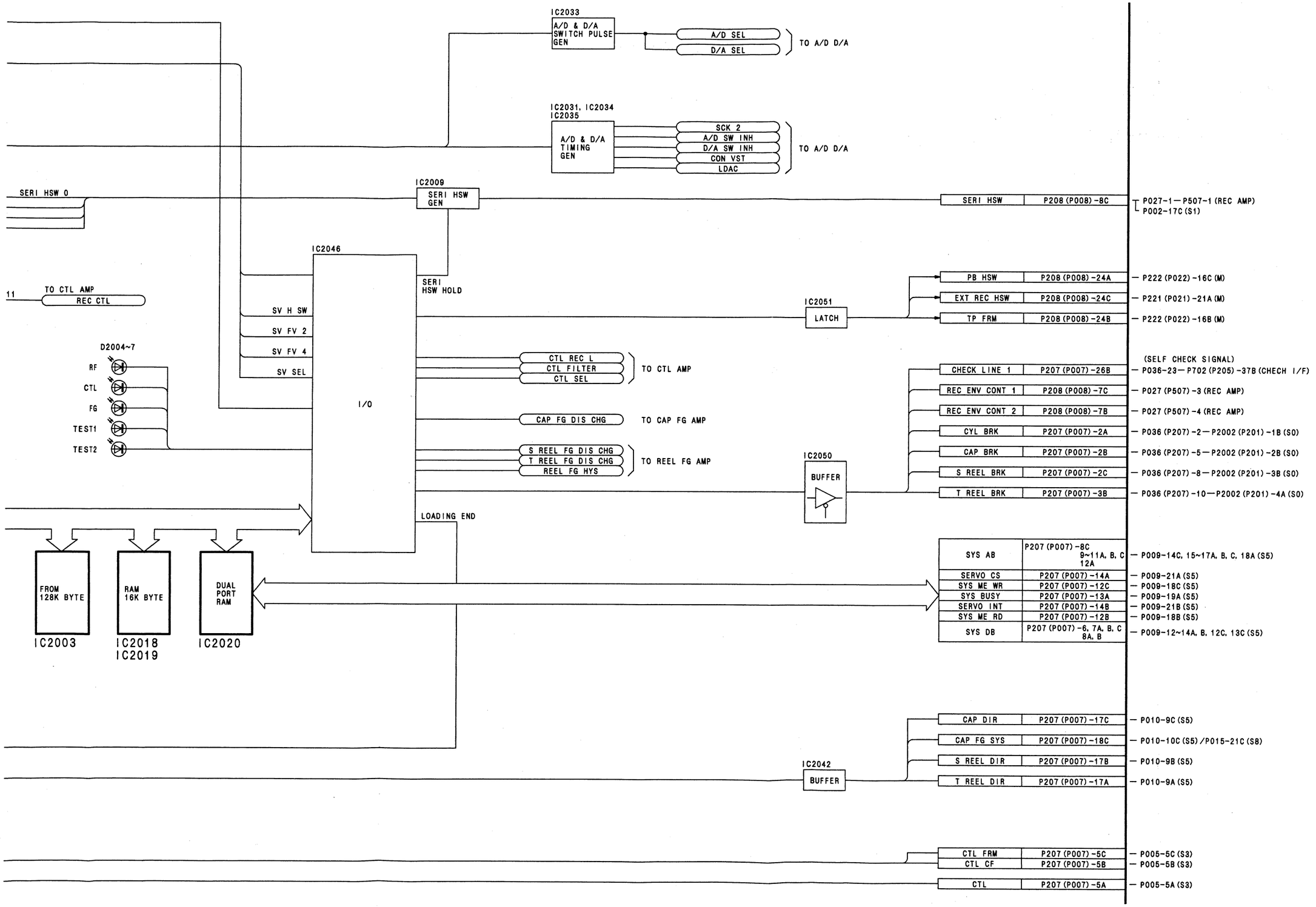
IC2033
A/D & D/A SWITCH PULSE GEN
A/D SEL
D/A SEL
TO A/D D/A
IC2031, IC2034
IC2035
A/D & D/A TIMING GEN
SCK 2
A/D SW INH
D/A SW INH
CON VST
LDAC
TO A/D D/A
SERI HSW 0
IC2009
SERI HSW GEN
SERI HSW
P208 (P008) -8C
P027-1 — P507-1 (REC AMP)
P002-17C (S1)
IC2046
SERI HSW HOLD
11
TO CTL AMP
REC CTL
SV H SW
SV FV 2
SV FV 4
SV SEL
IC2051
LATCH
PB HSW
P208 (P008) -24A
— P222 (P022) -16C (M)
EXT REC HSW
P208 (P008) -24C
— P221 (P021) -21A (M)
TP FRM
P208 (P008) -24B
— P222 (P022) -16B (M)
D2004~7
RF
CTL
FG
TEST1
TEST2
I/O
CTL REC L
CTL FILTER
CTL SEL
TO CTL AMP
CAP FG DIS CHG
TO CAP FG AMP
S REEL FG DIS CHG
T REEL FG DIS CHG
REEL FG HYS
TO REEL FG AMP
(SELF CHECK SIGNAL)
CHECK LINE 1
P207 (P007) -26B
— P036-23 — P702 (P205) -37B (CHECH I/F)
REC ENV CONT 1
P208 (P008) -7C
— P027 (P507) -3 (REC AMP)
REC ENV CONT 2
P208 (P008) -7B
— P027 (P507) -4 (REC AMP)
CYL BRK
P207 (P007) -2A
— P036 (P207) -2 — P2002 (P201) -1B (S0)
CAP BRK
P207 (P007) -2B
— P036 (P207) -5 — P2002 (P201) -2B (S0)
S REEL BRK
P207 (P007) -2C
— P036 (P207) -8 — P2002 (P201) -3B (S0)
T REEL BRK
P207 (P007) -3B
— P036 (P207) -10 — P2002 (P201) -4A (S0)
IC2050
BUFFER
LOADING END
FROM 128K BYTE
RAM 16K BYTE
DUAL PORT RAM
IC2003
IC2018
IC2019
IC2020
SYS AB
P207 (P007) -8C 9~11A, B, C 12A
— P009-14C, 15~17A, B, C, 18A (S5)
SERVO CS
P207 (P007) -14A
— P009-21A (S5)
SYS WE WR
P207 (P007) -12C
— P009-18C (S5)
SYS BUSY
P207 (P007) -13A
— P009-19A (S5)
SERVO INT
P207 (P007) -14B
— P009-21B (S5)
SYS WE RD
P207 (P007) -12B
— P009-18B (S5)
SYS DB
P207 (P007) -6, 7A, B, C 8A, B
— P009-12~14A, B, 12C, 13C (S5)
IC2042
BUFFER
CAP DIR
P207 (P007) -17C
— P010-9C (S5)
CAP FG SYS
P207 (P007) -18C
— P010-10C (S5) / P015-21C (S8)
S REEL DIR
P207 (P007) -17B
— P010-9B (S5)
T REEL DIR
P207 (P007) -17A
— P010-9A (S5)
CTL FRM
P207 (P007) -5C
— P005-5C (S3)
CTL CF
P207 (P007) -5B
— P005-5B (S3)
CTL
P207 (P007) -5A
— P005-5A (S3)

SERVO/AT (S4) AD, DA BLOCK DIAGRAM

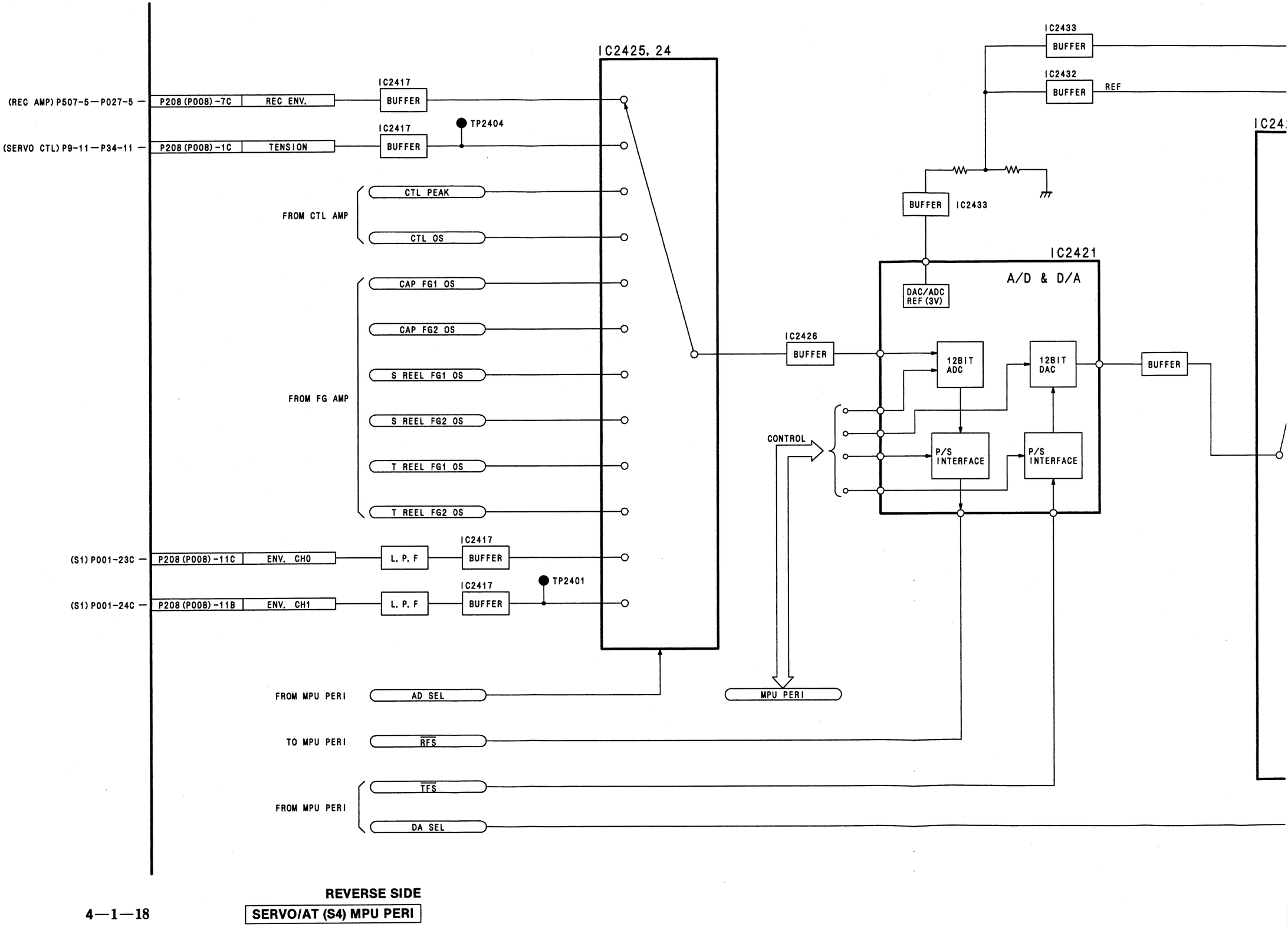

REVERSE SIDE

SERVO/AT (S4) MPU PERI

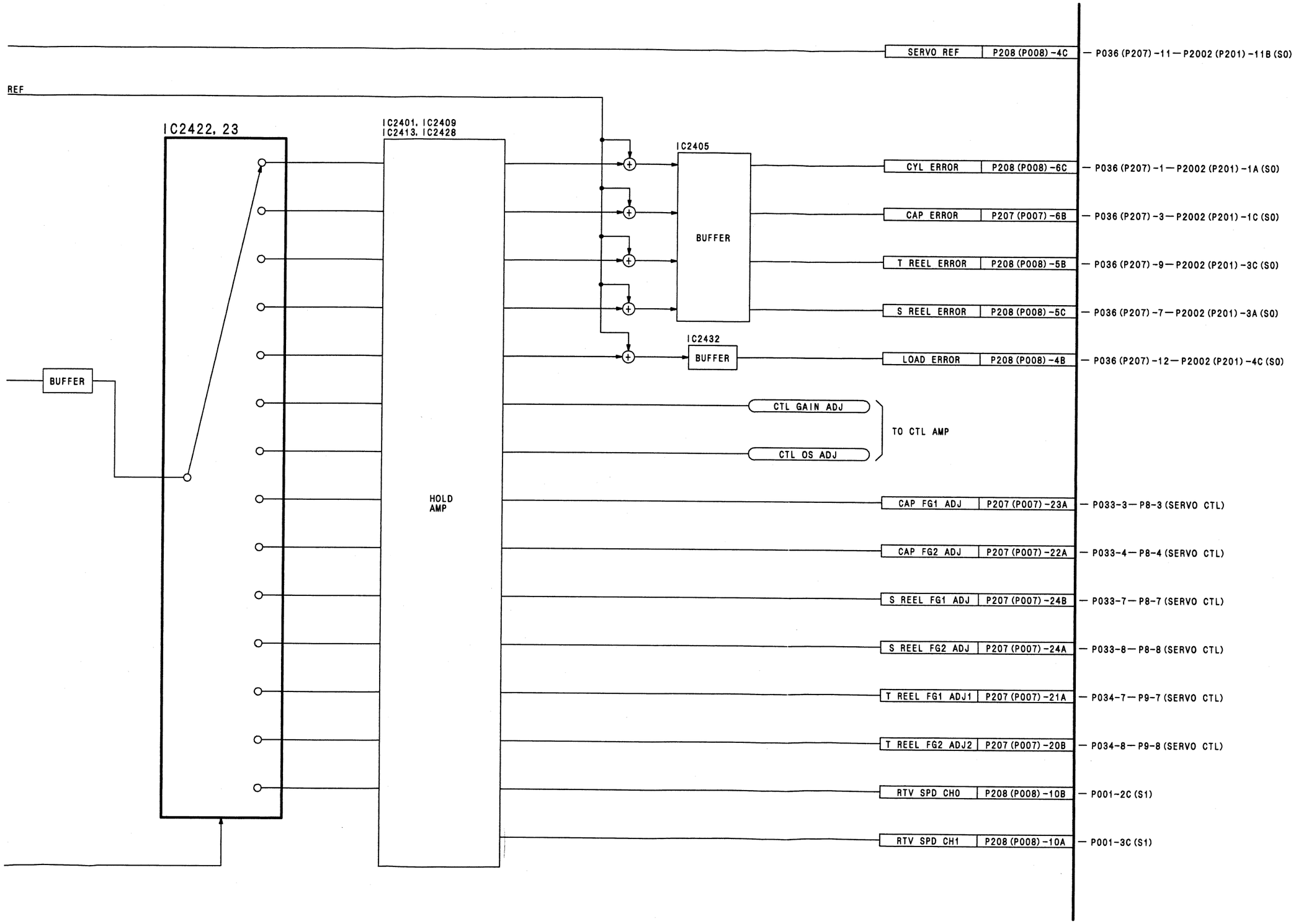
SERVO REF
P208 (P008) -4C
P036 (P207) -11 — P2002 (P201) -11B (S0)
REF
IC2422, 23
IC2401, IC2409
IC2413, IC2428
IC2405
CYL ERROR
P208 (P008) -6C
P036 (P207) -1 — P2002 (P201) -1A (S0)
CAP ERROR
P207 (P007) -6B
P036 (P207) -3 — P2002 (P201) -1C (S0)
BUFFER
T REEL ERROR
P208 (P008) -5B
P036 (P207) -9 — P2002 (P201) -3C (S0)
S REEL ERROR
P208 (P008) -5C
P036 (P207) -7 — P2002 (P201) -3A (S0)
IC2432
BUFFER
LOAD ERROR
P208 (P008) -4B
P036 (P207) -12 — P2002 (P201) -4C (S0)
BUFFER
CTL GAIN ADJ
CTL OS ADJ
TO CTL AMP
HOLD
AMP
CAP FG1 ADJ
P207 (P007) -23A
P033-3 — P8-3 (SERVO CTL)
CAP FG2 ADJ
P207 (P007) -22A
P033-4 — P8-4 (SERVO CTL)
S REEL FG1 ADJ
P207 (P007) -24B
P033-7 — P8-7 (SERVO CTL)
S REEL FG2 ADJ
P207 (P007) -24A
P033-8 — P8-8 (SERVO CTL)
T REEL FG1 ADJ1
P207 (P007) -21A
P034-7 — P9-7 (SERVO CTL)
T REEL FG2 ADJ2
P207 (P007) -20B
P034-8 — P9-8 (SERVO CTL)
RTV SPD CH0
P208 (P008) -10B
P001-2C (S1)
RTV SPD CH1
P208 (P008) -10A
P001-3C (S1)

SERVO/AT (S4) CTL AMP/S REEL AMP/T REEL AMP/CAP FG AMP BLOCK DIAGRAM

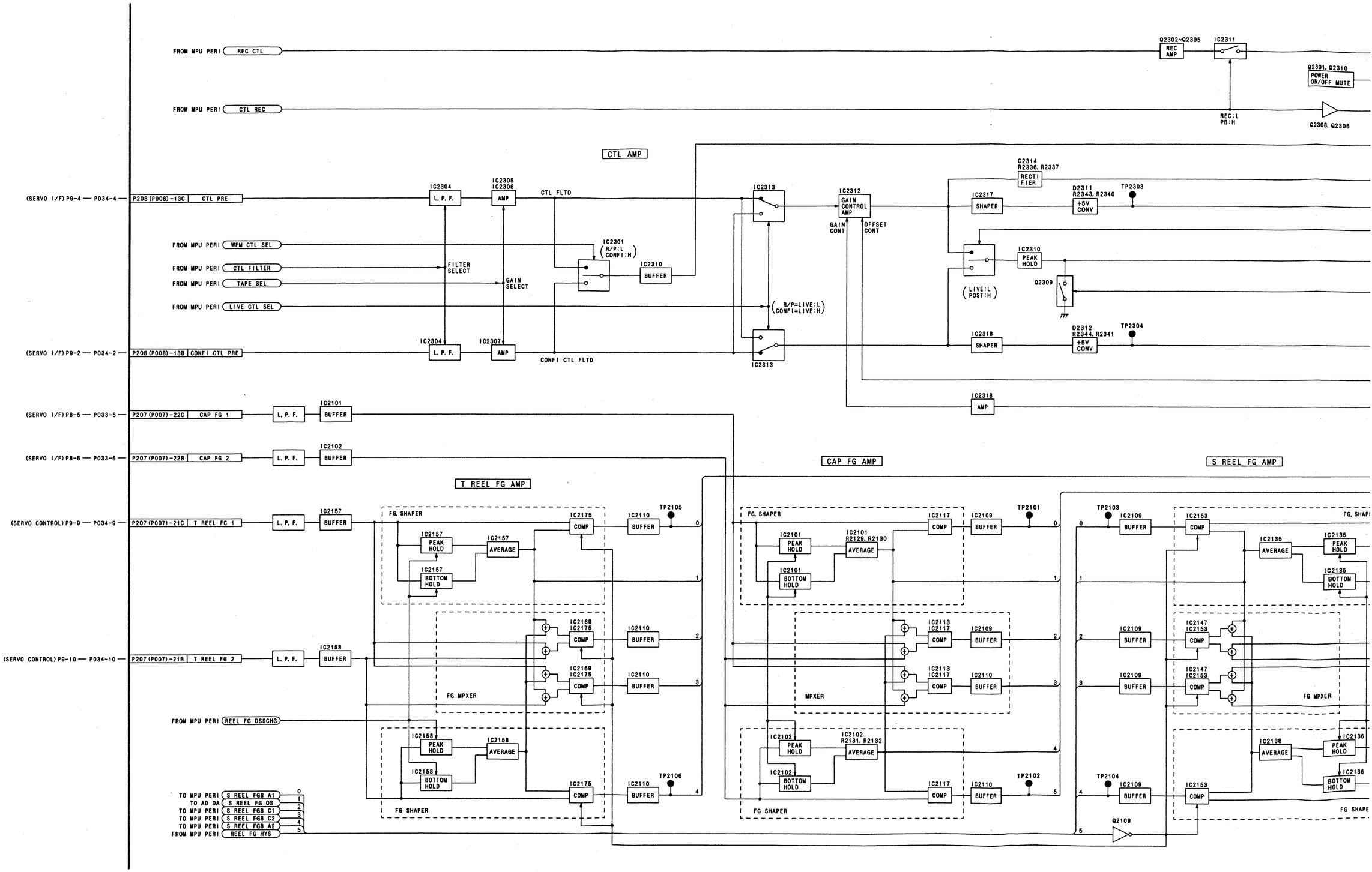

MP/CAP FG AMP BLOCK DIAGRAM

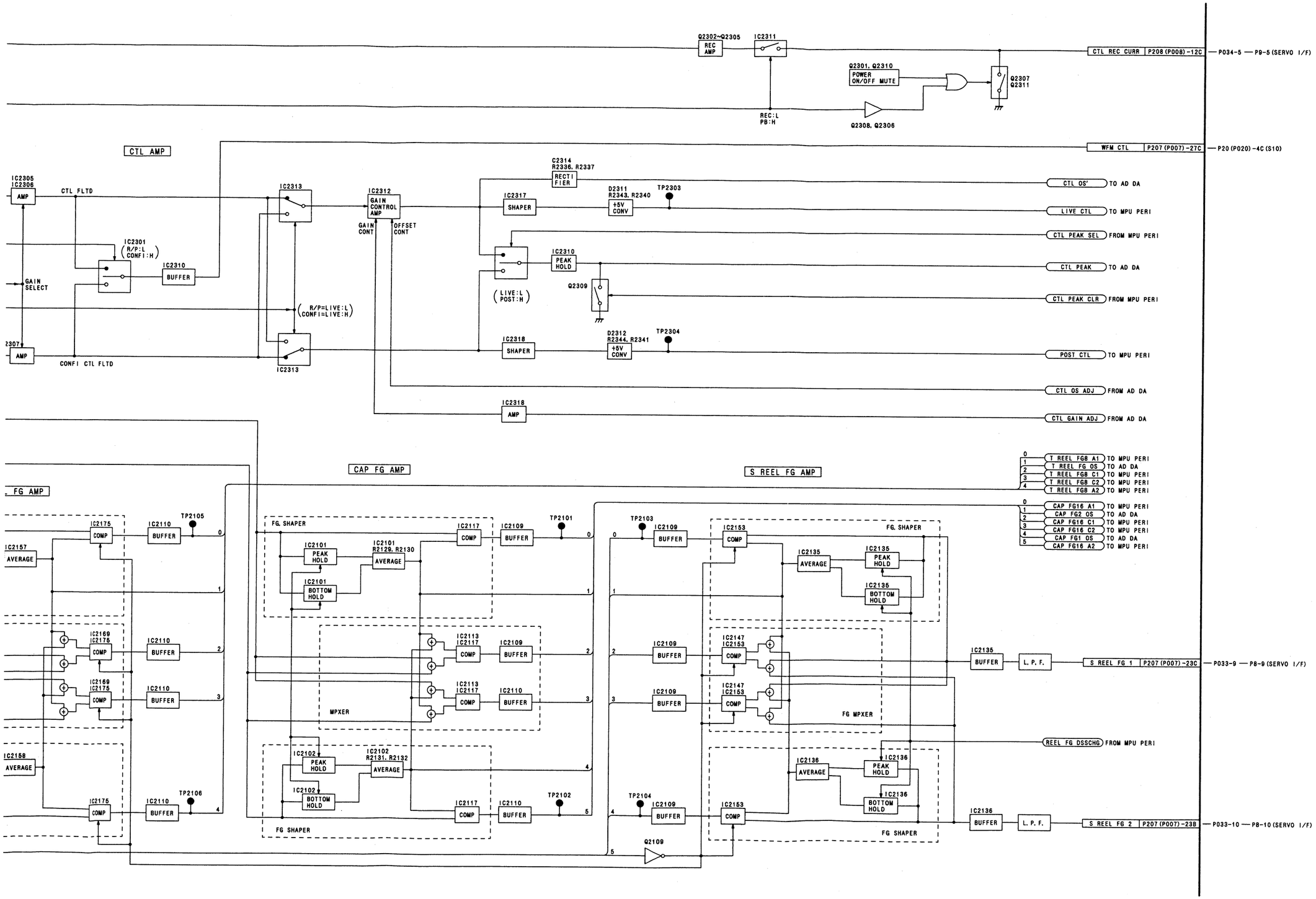

REVERSE SIDE
DRIVE (S0)
MECHANISM CONTROL

DRIVE (S0) MECHANISM CONTROL BLOCK DIAGRAM

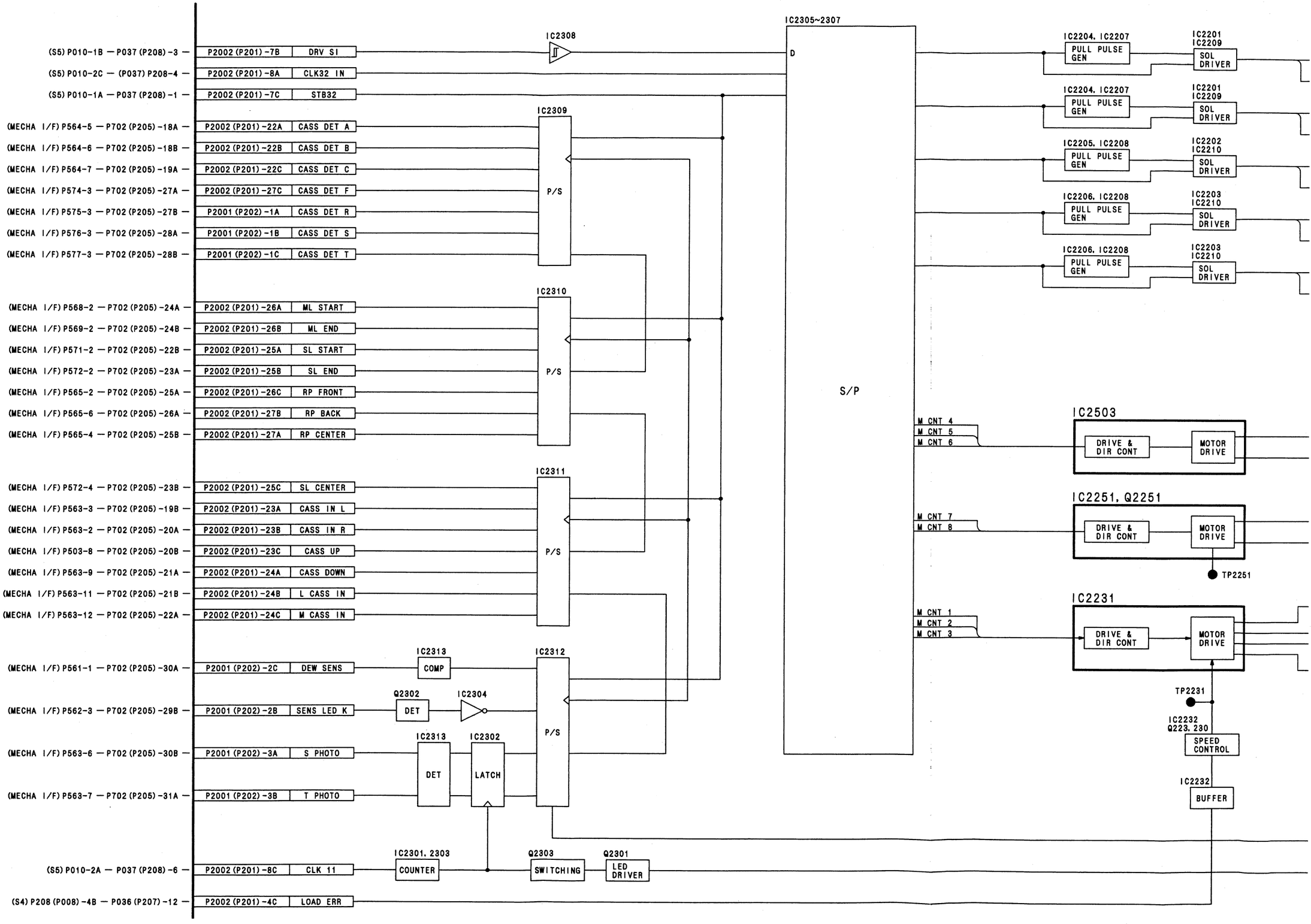

K DIAGRAM

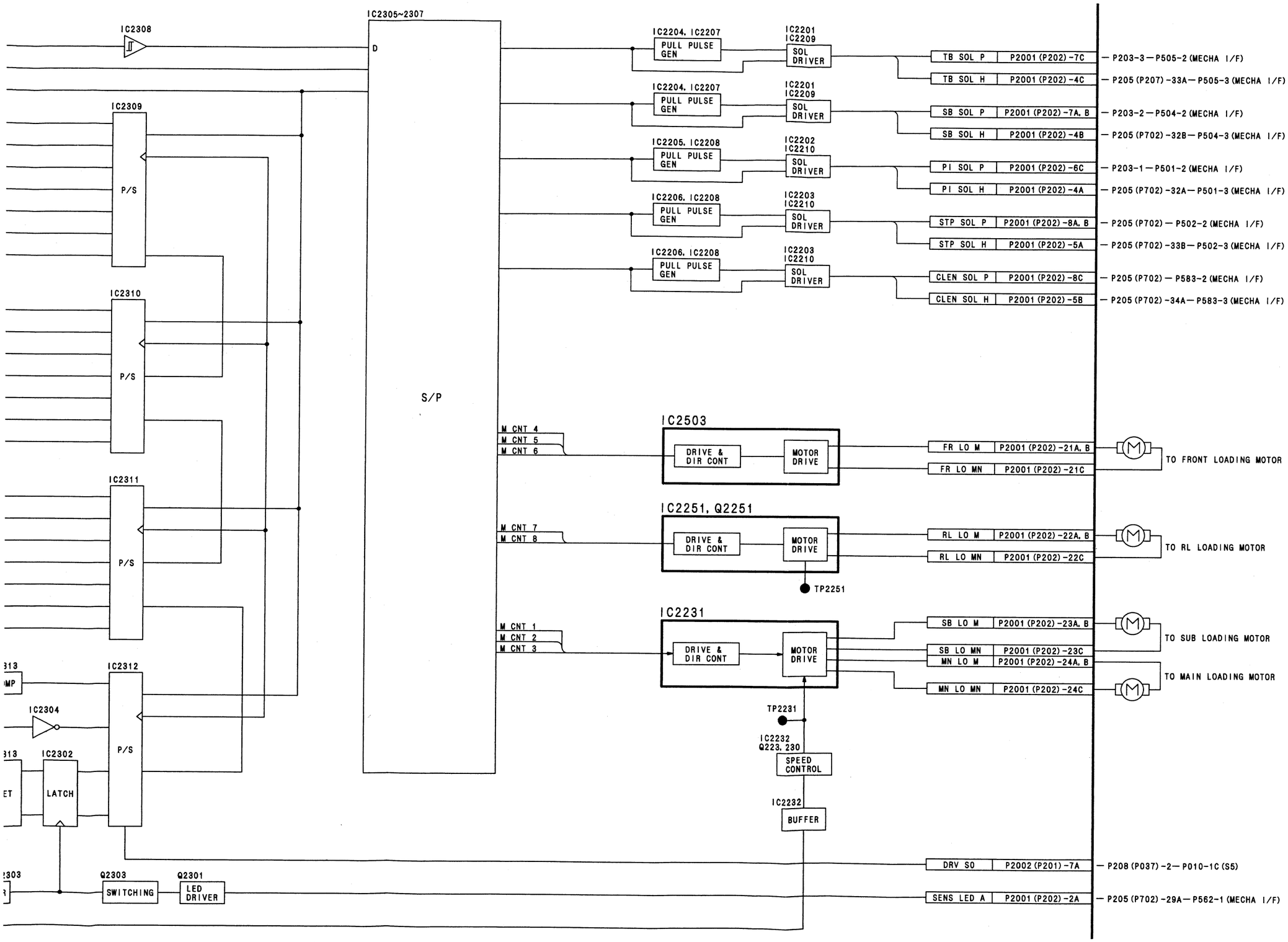
IC2305~2307
D
S/P
IC2308
IC2309
P/S
IC2310
P/S
IC2311
P/S
IC2312
P/S
IC2304
IC2302
LATCH
Q2303
SWITCHING
Q2301
LED DRIVER
IC2204, IC2207
PULL PULSE GEN
IC2201
IC2209
SOL DRIVER
TB SOL P
P2001 (P202) -7C
— P203-3 — P505-2 (MECHA I/F)
TB SOL H
P2001 (P202) -4C
— P205 (P207) -33A — P505-3 (MECHA I/F)
IC2204, IC2207
PULL PULSE GEN
IC2201
IC2209
SOL DRIVER
SB SOL P
P2001 (P202) -7A, B
— P203-2 — P504-2 (MECHA I/F)
SB SOL H
P2001 (P202) -4B
— P205 (P702) -32B — P504-3 (MECHA I/F)
IC2205, IC2208
PULL PULSE GEN
IC2202
IC2210
SOL DRIVER
PI SOL P
P2001 (P202) -6C
— P203-1 — P501-2 (MECHA I/F)
PI SOL H
P2001 (P202) -4A
— P205 (P702) -32A — P501-3 (MECHA I/F)
IC2206, IC2208
PULL PULSE GEN
IC2203
IC2210
SOL DRIVER
STP SOL P
P2001 (P202) -8A, B
— P205 (P702) — P502-2 (MECHA I/F)
STP SOL H
P2001 (P202) -5A
— P205 (P702) -33B — P502-3 (MECHA I/F)
IC2206, IC2208
PULL PULSE GEN
IC2203
IC2210
SOL DRIVER
CLEN SOL P
P2001 (P202) -8C
— P205 (P702) — P583-2 (MECHA I/F)
CLEN SOL H
P2001 (P202) -5B
— P205 (P702) -34A — P583-3 (MECHA I/F)
M CNT 4
M CNT 5
M CNT 6
IC2503
DRIVE & DIR CONT
MOTOR DRIVE
FR LO M
P2001 (P202) -21A, B
FR LO MN
P2001 (P202) -21C
TO FRONT LOADING MOTOR
IC2251, Q2251
M CNT 7
M CNT 8
DRIVE & DIR CONT
MOTOR DRIVE
RL LO M
P2001 (P202) -22A, B
RL LO MN
P2001 (P202) -22C
TO RL LOADING MOTOR
TP2251
IC2231
M CNT 1
M CNT 2
M CNT 3
DRIVE & DIR CONT
MOTOR DRIVE
SB LO M
P2001 (P202) -23A, B
SB LO MN
P2001 (P202) -23C
MN LO M
P2001 (P202) -24A, B
TO SUB LOADING MOTOR
TO MAIN LOADING MOTOR
MN LO MN
P2001 (P202) -24C
TP2231
IC2232
Q223, 230
SPEED CONTROL
IC2232
BUFFER
DRV SO
P2002 (P201) -7A
— P208 (P037) -2 — P010-1C (S5)
SENS LED A
P2001 (P202) -2A
— P205 (P702) -29A — P562-1 (MECHA I/F)

DRIVE (S0) S REEL/T REEL/CAPSTAN/DRUM MOTOR DRIVE BLOCK DIAGRAM

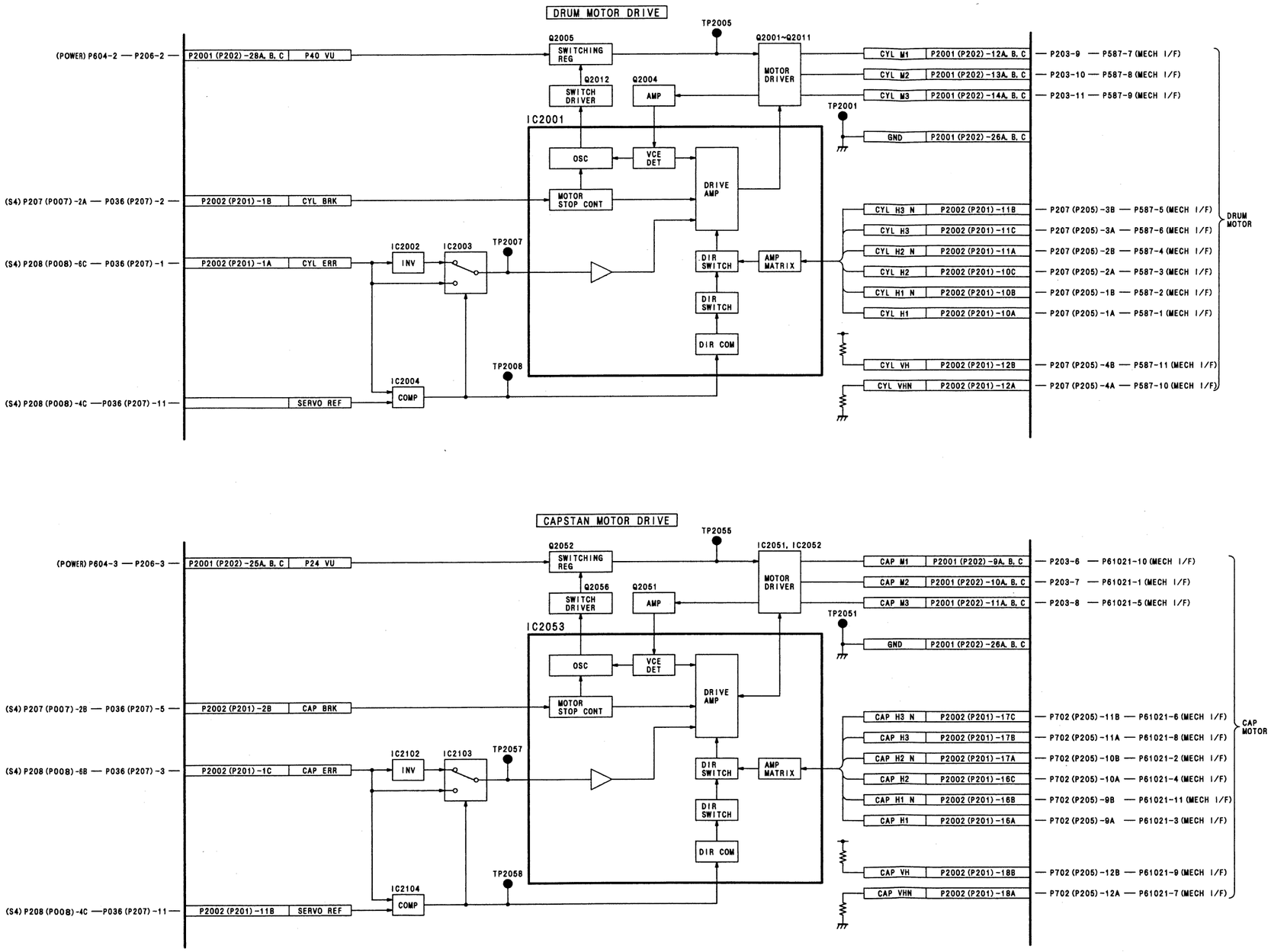

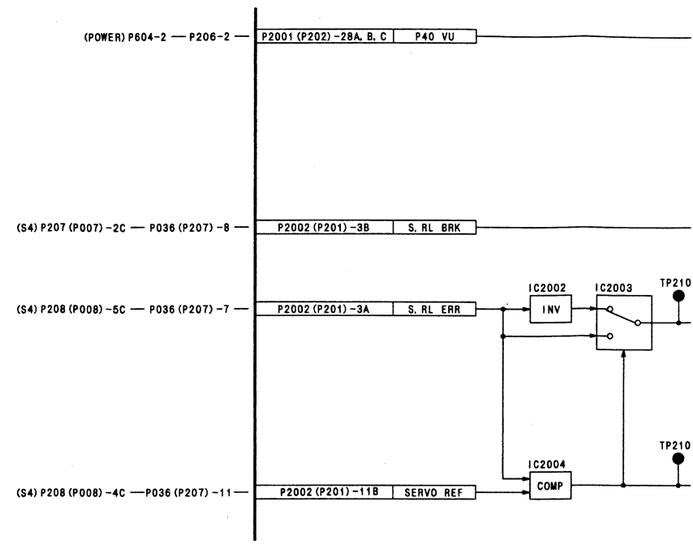

RIVE BLOCK DIAGRAM

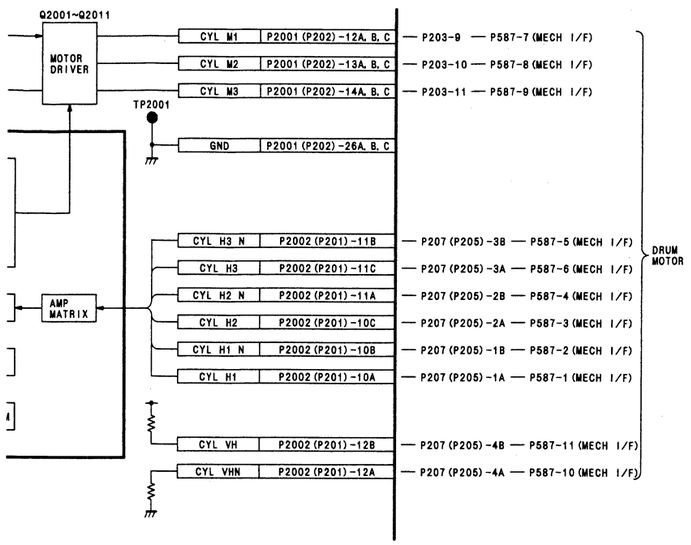

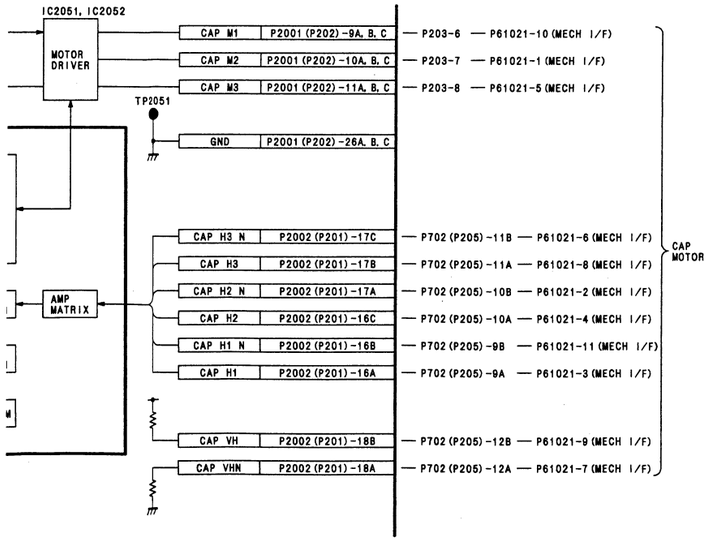

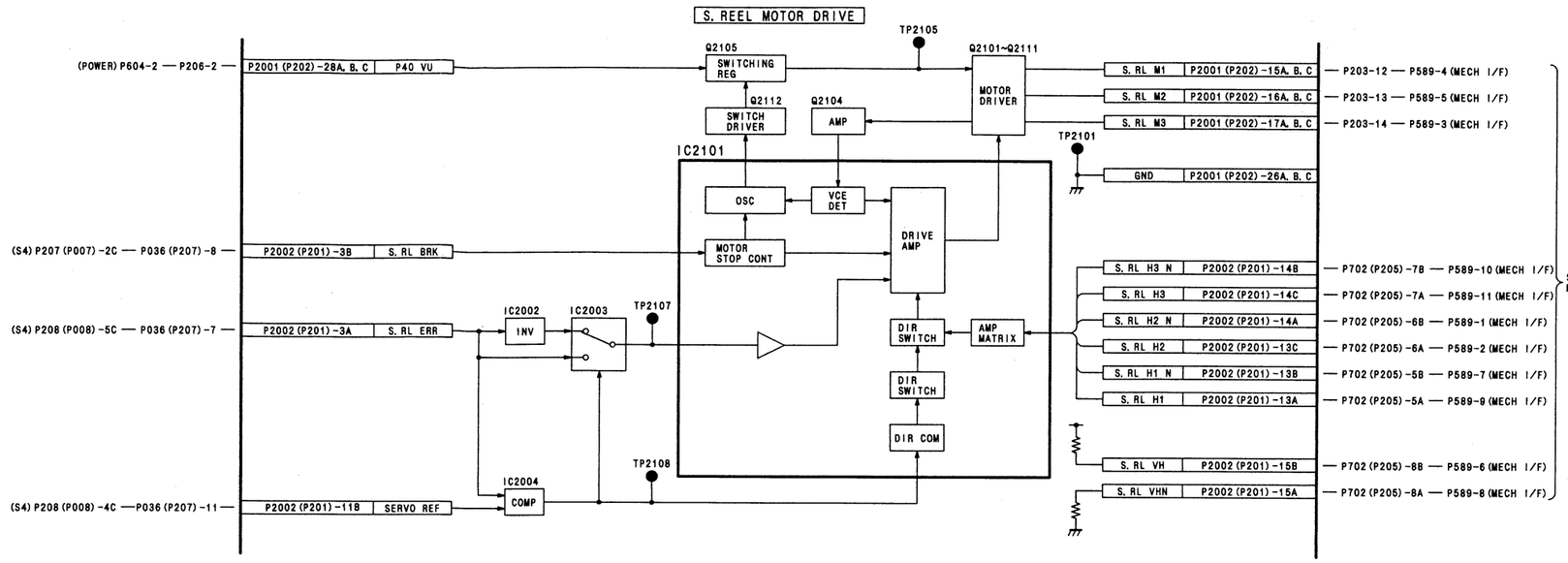

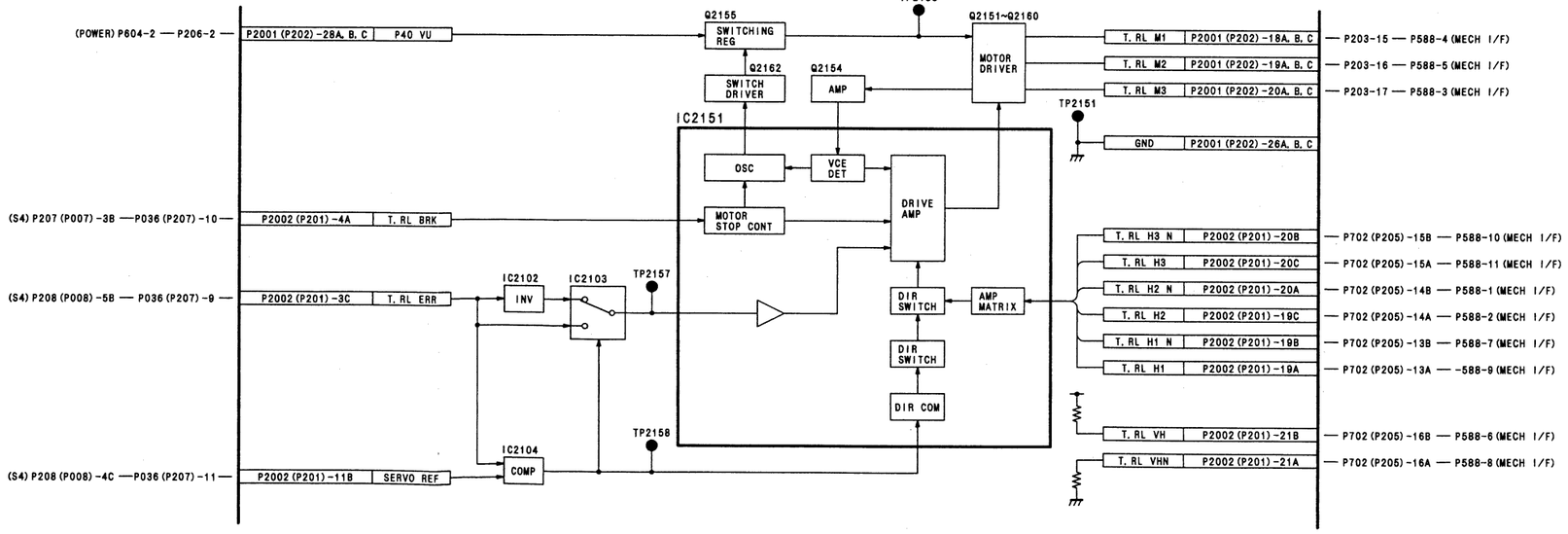

REVERSE SIDE
SYSTEM CONTROL (S5)

SYSTEM CONTROL (S5) BLOCK DIAGRAM

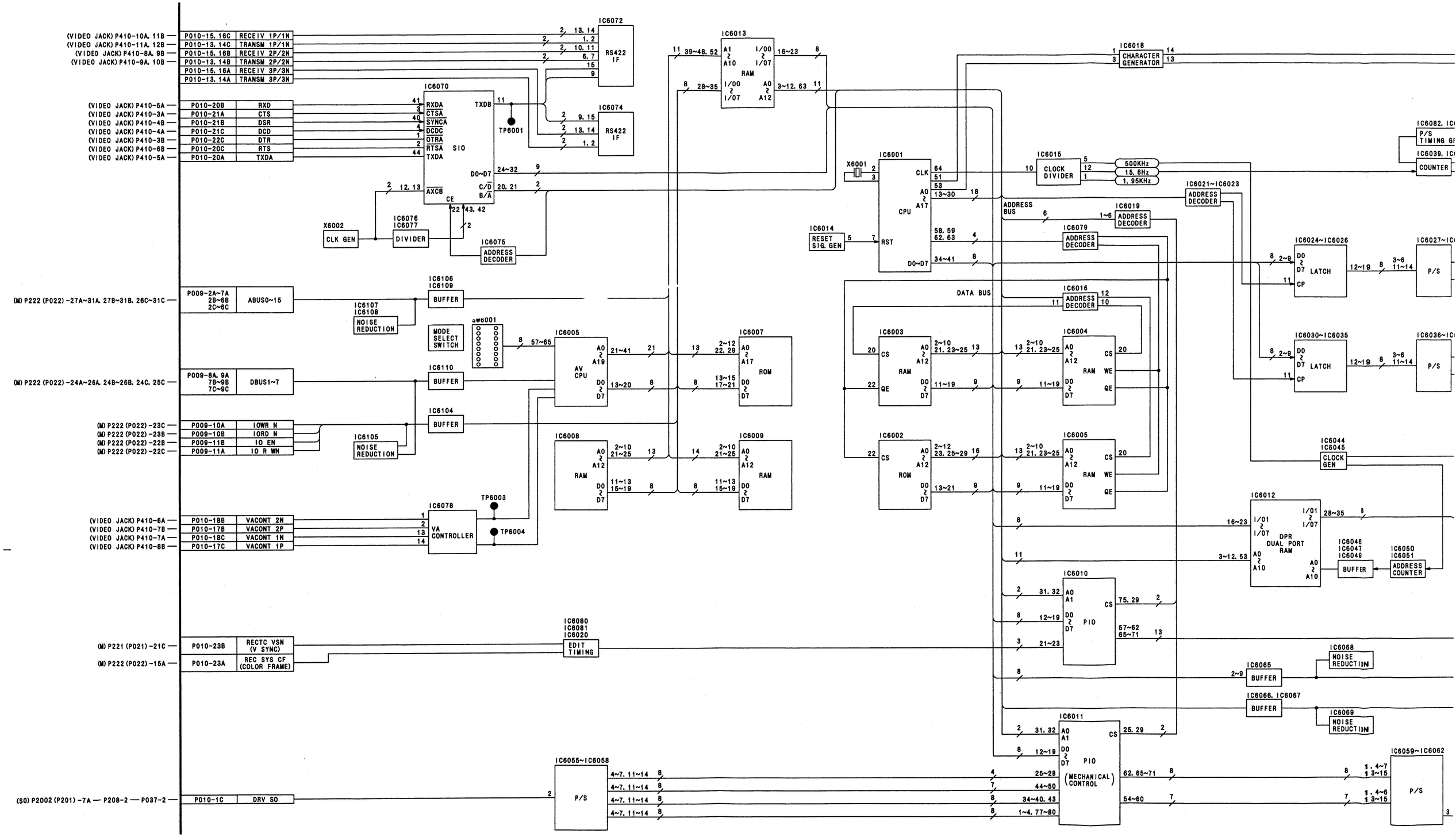

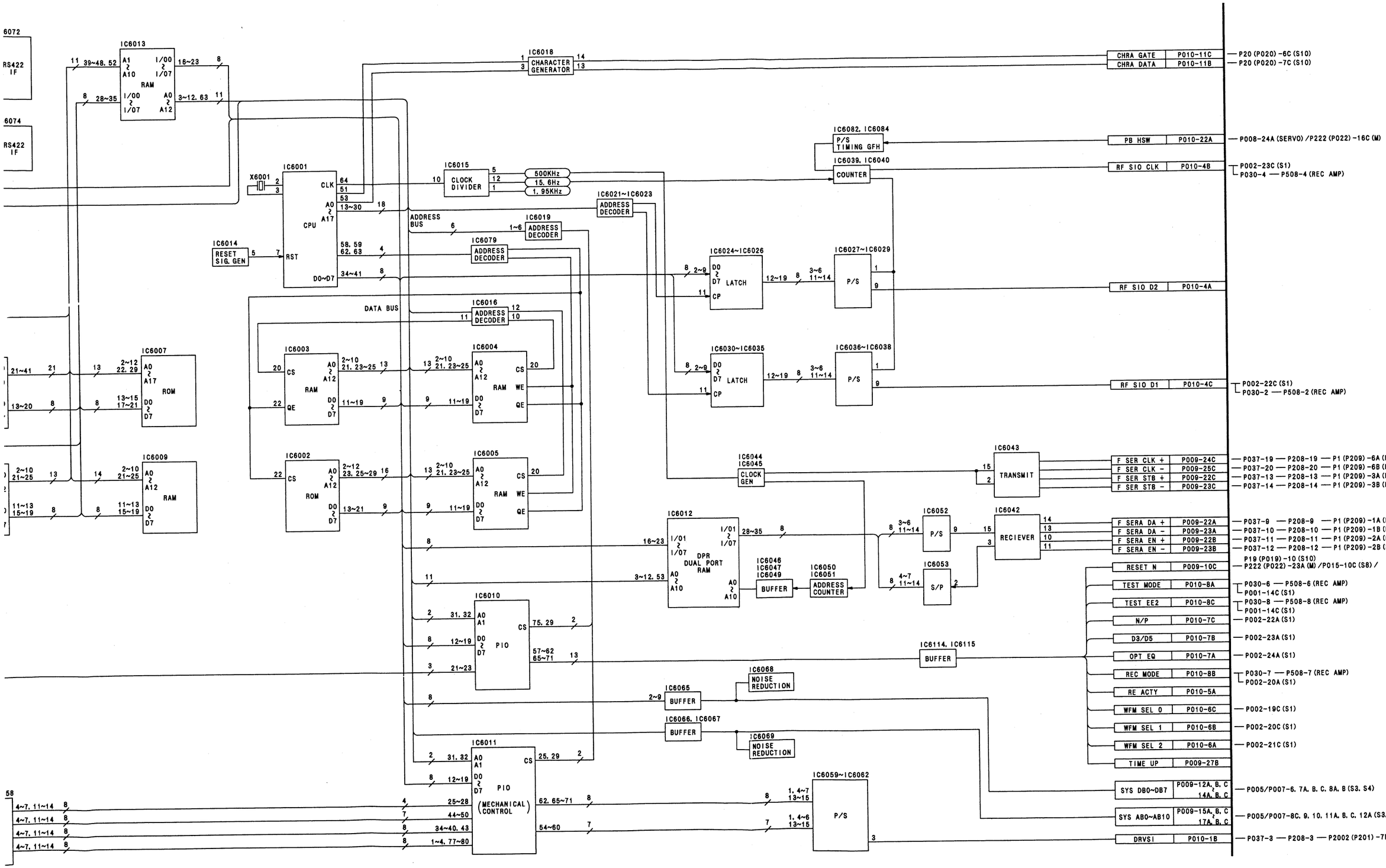
IC6013
RAM
IC6018
CHARACTER GENERATOR
IC6001
CPU
X6001
IC6015
CLOCK DIVIDER
500KHz
15.6Hz
1.95KHz
IC6014
RESET SIG. GEN
IC6079
ADDRESS DECODER
IC6019
ADDRESS DECODER
IC6021~IC6023
ADDRESS DECODER
IC6082, IC6084
P/S TIMING GFH
IC6039, IC6040
COUNTER
IC6024~IC6026
LATCH
IC6027~IC6029
P/S
IC6016
ADDRESS DECODER
IC6007
ROM
IC6003
RAM
IC6004
RAM
IC6009
RAM
IC6002
ROM
IC6005
RAM
IC6030~IC6035
LATCH
IC6036~IC6038
P/S
IC6044
IC6045
CLOCK GEN
IC6043
TRANSMIT
IC6012
DPR DUAL PORT RAM
IC6046
IC6047
IC6049
BUFFER
IC6050
IC6051
ADDRESS COUNTER
IC6052
P/S
IC6053
S/P
IC6042
RECIEVER
IC6010
PIO
IC6114, IC6115
BUFFER
IC6068
NOISE REDUCTION
IC6065
BUFFER
IC6066, IC6067
BUFFER
IC6069
NOISE REDUCTION
IC6011
PIO
(MECHANICAL CONTROL)
IC6059~IC6062
P/S
ADDRESS BUS
DATA BUS
CHRA GATE
CHRA DATA
PB HSW
RF SIO CLK
RF SIO D2
RF SIO D1
F SER CLK +
F SER CLK -
F SER STB +
F SER STB -
F SERA DA +
F SERA DA -
F SERA EN +
F SERA EN -
RESET N
TEST MODE
TEST EE2
N/P
D3/D5
OPT EQ
REC MODE
RE ACTY
WFM SEL 0
WFM SEL 1
WFM SEL 2
TIME UP
SYS DB0~DB7
SYS AB0~AB10
DRVSI
P20 (P020) -6C (S10)
P20 (P020) -7C (S10)
P008-24A (SERVO) /P222 (P022) -16C (M)
P002-23C (S1)
P030-4 — P508-4 (REC AMP)
P002-22C (S1)
P030-2 — P508-2 (REC AMP)
P037-19 — P208-19 — P1 (P209) -6A (FR CPU)
P037-20 — P208-20 — P1 (P209) -6B (FR CPU)
P037-13 — P208-13 — P1 (P209) -3A (FR CPU)
P037-14 — P208-14 — P1 (P209) -3B (FR CPU)
P037-9 — P208-9 — P1 (P209) -1A (FR CPU)
P037-10 — P208-10 — P1 (P209) -1B (FR CPU)
P037-11 — P208-11 — P1 (P209) -2A (FR CPU)
P037-12 — P208-12 — P1 (P209) -2B (FR CPU)
P19 (P019) -10 (S10)
P222 (P022) -23A (M) /P015-10C (S8) /
P030-6 — P508-6 (REC AMP)
P001-14C (S1)
P030-8 — P508-8 (REC AMP)
P001-14C (S1)
P002-22A (S1)
P002-23A (S1)
P002-24A (S1)
P030-7 — P508-7 (REC AMP)
P002-20A (S1)
P002-19C (S1)
P002-20C (S1)
P002-21C (S1)
P005/P007-6. 7A. B. C. 8A. B (S3. S4)
P005/P007-8C. 9. 10. 11A. B. C. 12A (S3. S4)
P037-3 — P208-3 — P2002 (P201) -7B (S0)

:RIAL I/F BLOCK DIAGRAM

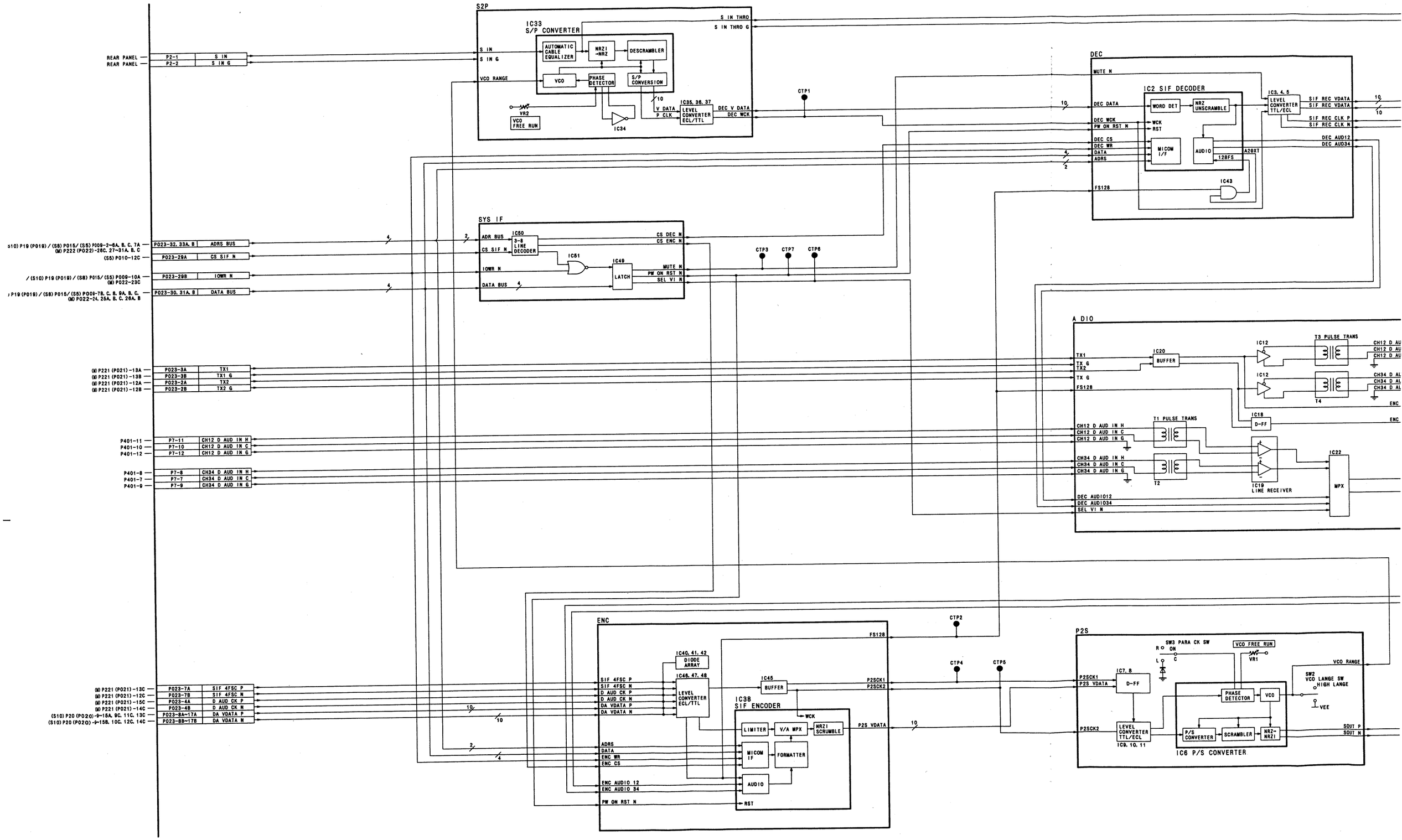

IC33
S/P CONVERTER
AUTOMATIC CABLE EQUALIZER
NRZI →NRZ
DESCRAMBLER
VCO
PHASE DETECTOR
S/P CONVERSION
10
V DATA
P CLK
IC35, 36, 37
LEVEL CONVERTER ECL/TTL
DEC V DATA
DEC WCK
IC34
S IN THRO
S IN THRO G
CTP1
DEC
MUTE N
IC2 SIF DECODER
DEC DATA
WORD DET
NRZ UNSCRAMBLE
DEC WCK
PW ON RST N
WCK
RST
DEC CS
DEC WR
DATA
ADRS
MICOM I/F
AUDIO
128FS
A20XT
FS128
IC43
IC3, 4, 5
LEVEL CONVERTER TTL/ECL
SIF REC VDATA
SIF REC VDATA
SIF REC CLK P
SIF REC CLK N
DEC AUD12
DEC AUD34
S IN THRO — P4-1 — P420-1 (SERIAL I/O)
S IN THRO G — P4-3 — P420-3 (SERIAL I/O)
SIF REC VDATA P — P023-19A~28A — P19 (P019) -22A~27A, 22C, 24C, 26C (S10)
SIF REC VDATA N — P023-19B~28B — P19 (P019) -22B~27B, 23C, 25C, 27C (S10)
SIF REC CLK P — P023-18A — P20 (P020) -2C (S10)
SIF REC CLK N — P023-18B — P20 (P020) -3C (S10)
CS DEC N
CS ENC N
IC51
IC49
LATCH
MUTE N
PW ON RST N
SEL VI N
CTP3
CTP7
CTP8
A DIO
TX1
TX G
TX2
TX G
FS128
IC20
BUFFER
IC12
T3 PULSE TRANS
CH12 D AUD OUT H
CH12 D AUD OUT C
CH12 D AUD OUT G
T4
CH34 D AUD OUT H
CH34 D AUD OUT C
CH34 D AUD OUT G
ENC AUDIO12
ENC AUDIO34
IC18
D-FF
T1 PULSE TRANS
CH12 D AUD IN H
CH12 D AUD IN C
CH12 D AUD IN G
CH34 D AUD IN H
CH34 D AUD IN C
CH34 D AUD IN G
T2
IC19
LINE RECEIVER
IC22
MPX
DEC AUDIO12
DEC AUDIO34
SEL VI N
RX1
RX1 G
RX2
RX2 G
CH12 D AUD OUT H — P7-5 — P401-5 (AUDIO JACK)
CH12 D AUD OUT C — P7-4 — P401-4 (AUDIO JACK)
CH12 D AUD OUT G — P7-6 — P401-6 (AUDIO JACK)
CH34 D AUD OUT H — P7-2 — P401-2 (AUDIO JACK)
CH34 D AUD OUT C — P7-1 — P401-1 (AUDIO JACK)
CH34 D AUD OUT G — P7-3 — P401-3 (AUDIO JACK)
RX1 — P023-6A — P221 (P021) -15A (MD)
RX1 G — P023-6B — P221 (P021) -15B (MD)
RX2 — P023-5A — P221 (P021) -14A (MD)
RX2 G — P023-5B — P221 (P021) -14B (MD)
ENC
FS128
CTP2
IC40, 41, 42
DIODE ARRAY
IC46, 47, 48
LEVEL CONVERTER ECL/TTL
SIF 4FSC P
SIF 4FSC N
D AUD CK P
D AUD CK N
DA VDATA P
DA VDATA N
IC45
BUFFER
P2SCK1
P2SCK2
IC38
SIF ENCODER
WCK
LIMITER
V/A MPX
NRZI SCRUMBLE
P2S VDATA
10
ADRS
DATA
ENC WR
ENC CS
MICOM IF
FORMATTER
AUDIO
ENC AUDIO 12
ENC AUDIO 34
PW ON RST N
RST
CTP4
CTP5
P2S
SW3 PARA CK SW
R
ON
C
L
VCO FREE RUN
VR1
VCO RANGE
SW2
VCO LANGE SW
HIGH LANGE
VEE
P2SCK1
P2S VDATA
IC7, 8
D-FF
PHASE DETECTOR
VCO
P2SCK2
LEVEL CONVERTER TTL/ECL
IC9, 10, 11
P/S CONVERTER
SCRAMBLER
NRZ-NRZI
SOUT P
SOUT N
IC6 P/S CONVERTER
S OUT — P3-1 — P420-4 (SERIAL I/O)
S OUT G — P3-3 — P420-6 (SERIAL I/O)

FR CPU BLOCK DIAGRAM

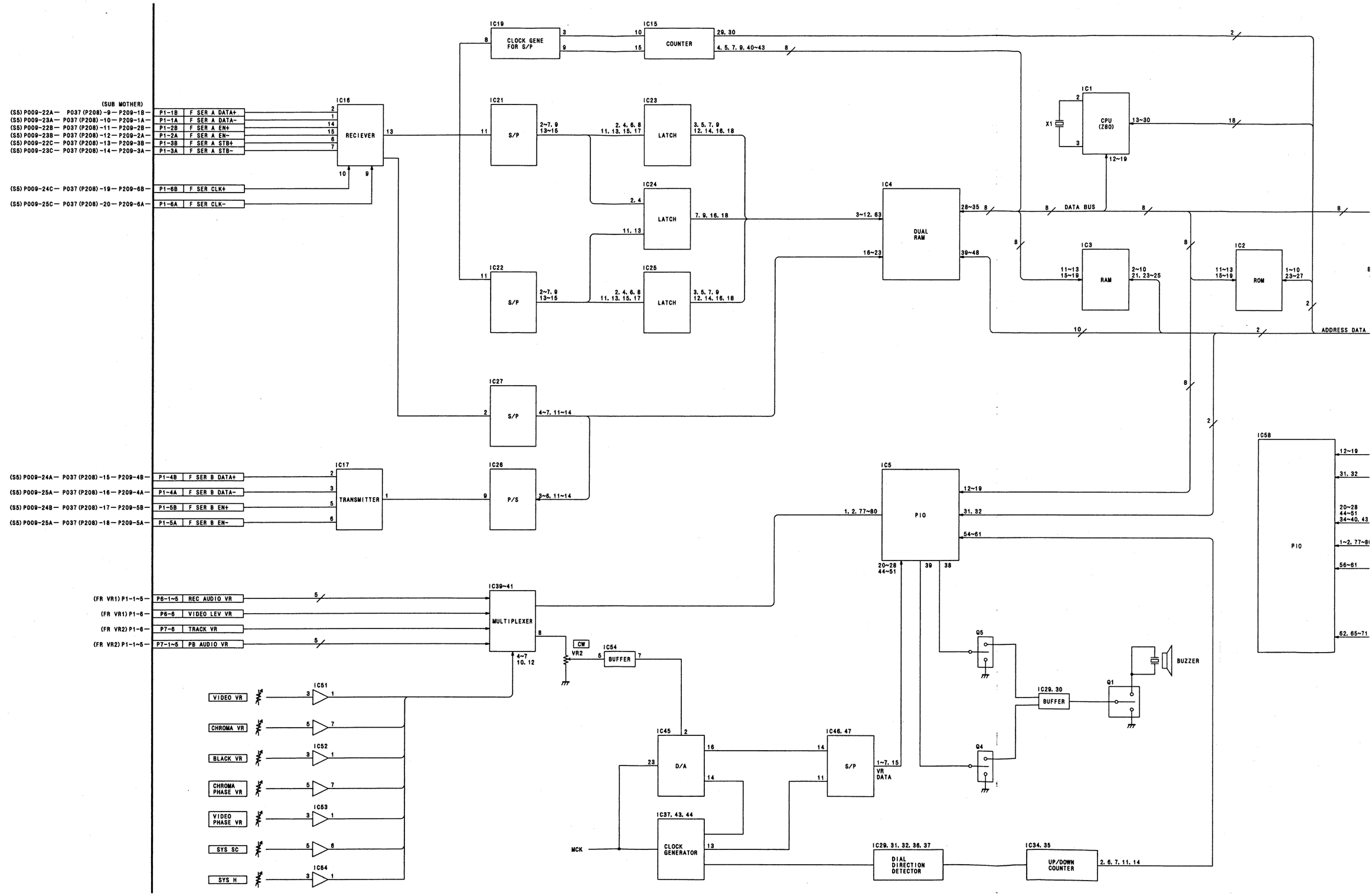

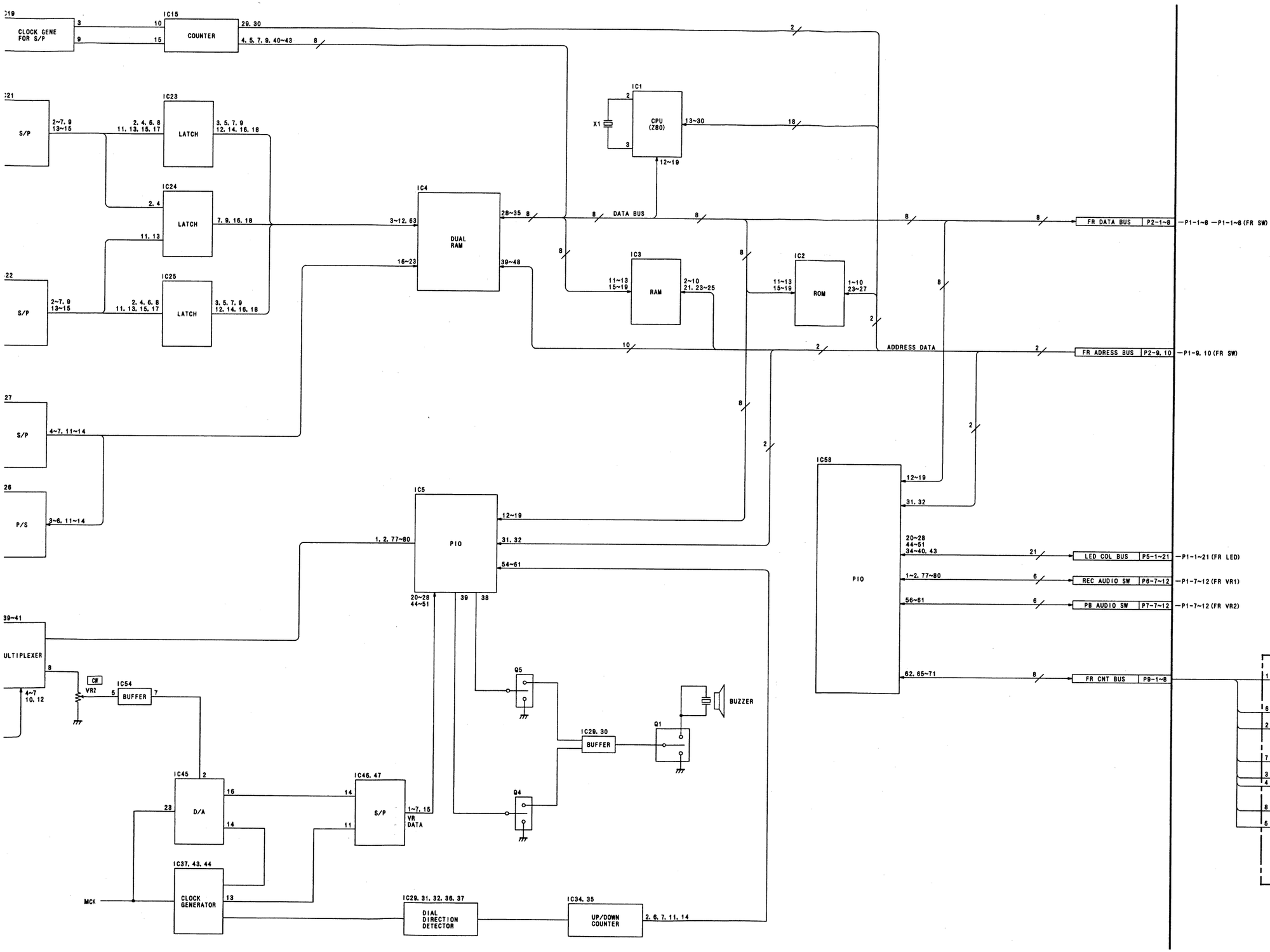
IC19
CLOCK GENE FOR S/P
3
9
IC15
10
15
COUNTER
29, 30
4, 5, 7, 9, 40~43
8
2
IC21
S/P
2~7, 9
13~15
2, 4, 6, 8
11, 13, 15, 17
IC23
LATCH
3, 5, 7, 9
12, 14, 16, 18
IC24
2, 4
11, 13
LATCH
7, 9, 16, 18
IC22
S/P
IC25
LATCH
IC1
X1
2
3
CPU (Z80)
13~30
18
12~19
IC4
DUAL RAM
3~12, 63
16~23
28~35
39~48
8
DATA BUS
IC3
RAM
11~13
15~19
2~10
21, 23~25
IC2
ROM
1~10
23~27
ADDRESS DATA
FR DATA BUS
P2-1~8
—P1-1~8 —P1-1~8 (FR SW)
FR ADRESS BUS
P2-9, 10
—P1-9, 10 (FR SW)
IC27
S/P
4~7, 11~14
IC26
P/S
3~6, 11~14
IC5
PIO
1, 2, 77~80
12~19
31, 32
54~61
20~28
44~51
39
38
IC58
PIO
20~28
44~51
34~40, 43
1~2, 77~80
56~61
62, 65~71
LED COL BUS
P5-1~21
—P1-1~21 (FR LED)
REC AUDIO SW
P8-7~12
—P1-7~12 (FR VR1)
PB AUDIO SW
P7-7~12
—P1-7~12 (FR VR2)
FR CNT BUS
P9-1~8
39~41
ULTIPLEXER
4~7
10, 12
CW
VR2
IC54
BUFFER
Q5
Q4
IC29, 30
BUFFER
Q1
BUZZER
IC45
D/A
IC46, 47
S/P
1~7, 15
VR DATA
IC37, 43, 44
CLOCK GENERATOR
MCK
IC29, 31, 32, 36, 37
DIAL DIRECTION DETECTOR
IC34, 35
UP/DOWN COUNTER
2, 6, 7, 11, 14
DISPLAY SW4
DIAG SW7
TC SW3
SET SW6
CF SW2
MENU SW5
REC INH SW1
FR CPU SUB

MAIN MOTHER (1/11) SCHEMATIC DIAGRAM

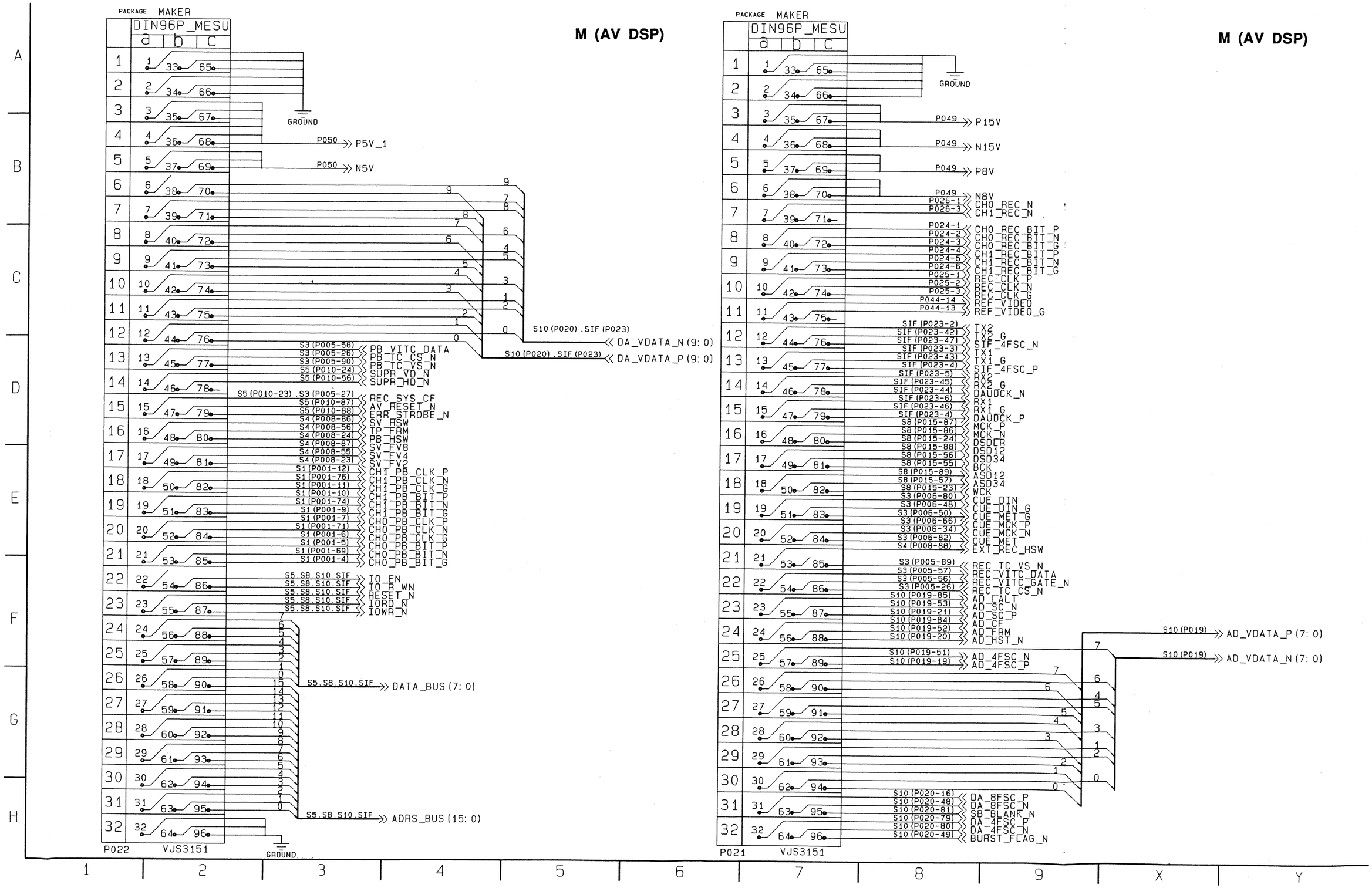

MAIN MOTHER (2/11) SCHEMATIC DIAGRAM

DSP)

TA_P (7: 0)

TA_N (7: 0)

S10 (VIDEO A/D,D/A)

S10 (VIDEO A/D,D/A)

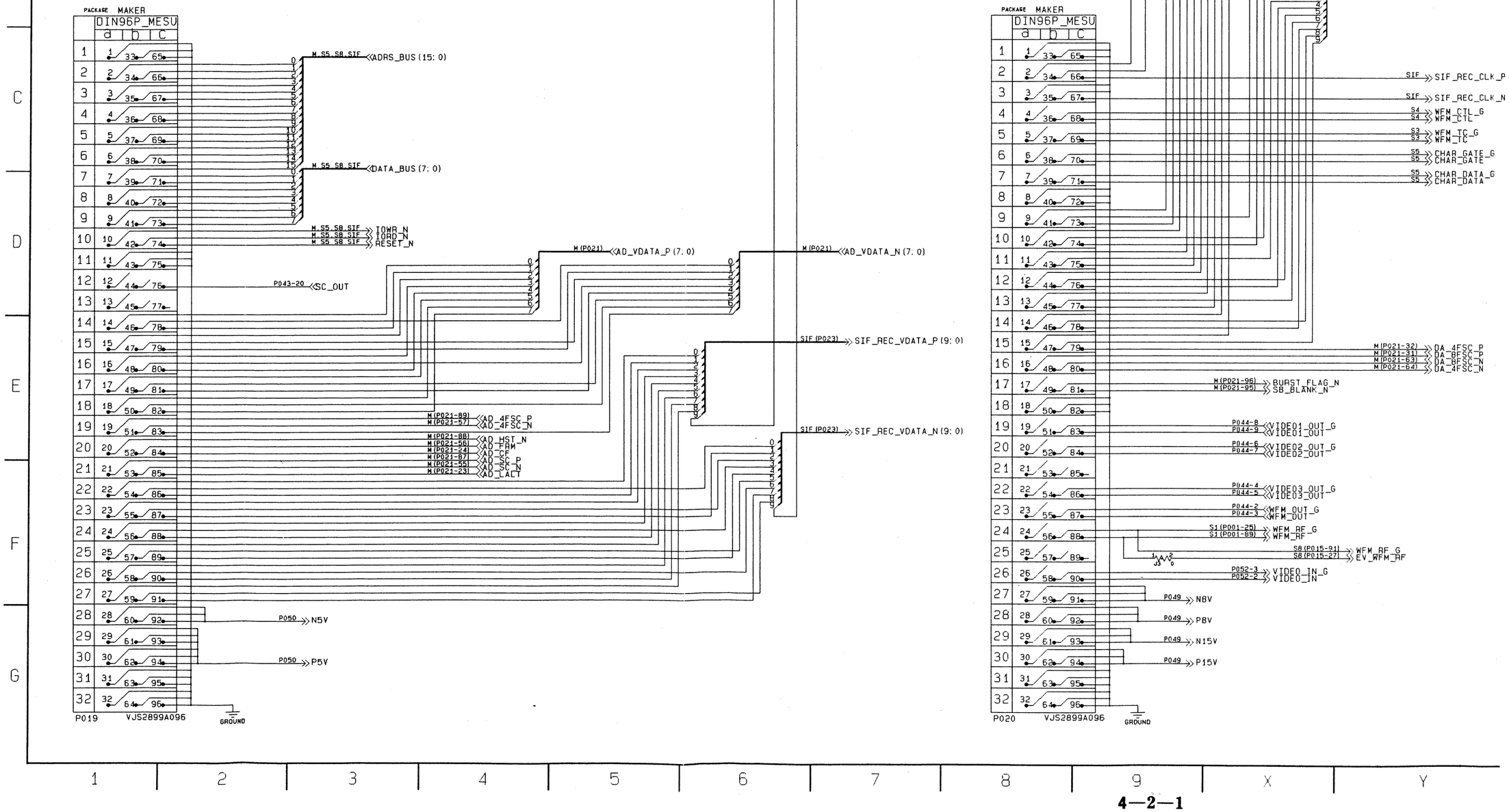

4—2—1

MAIN MOTHER (3/11) SCHEMATIC DIAGRAM

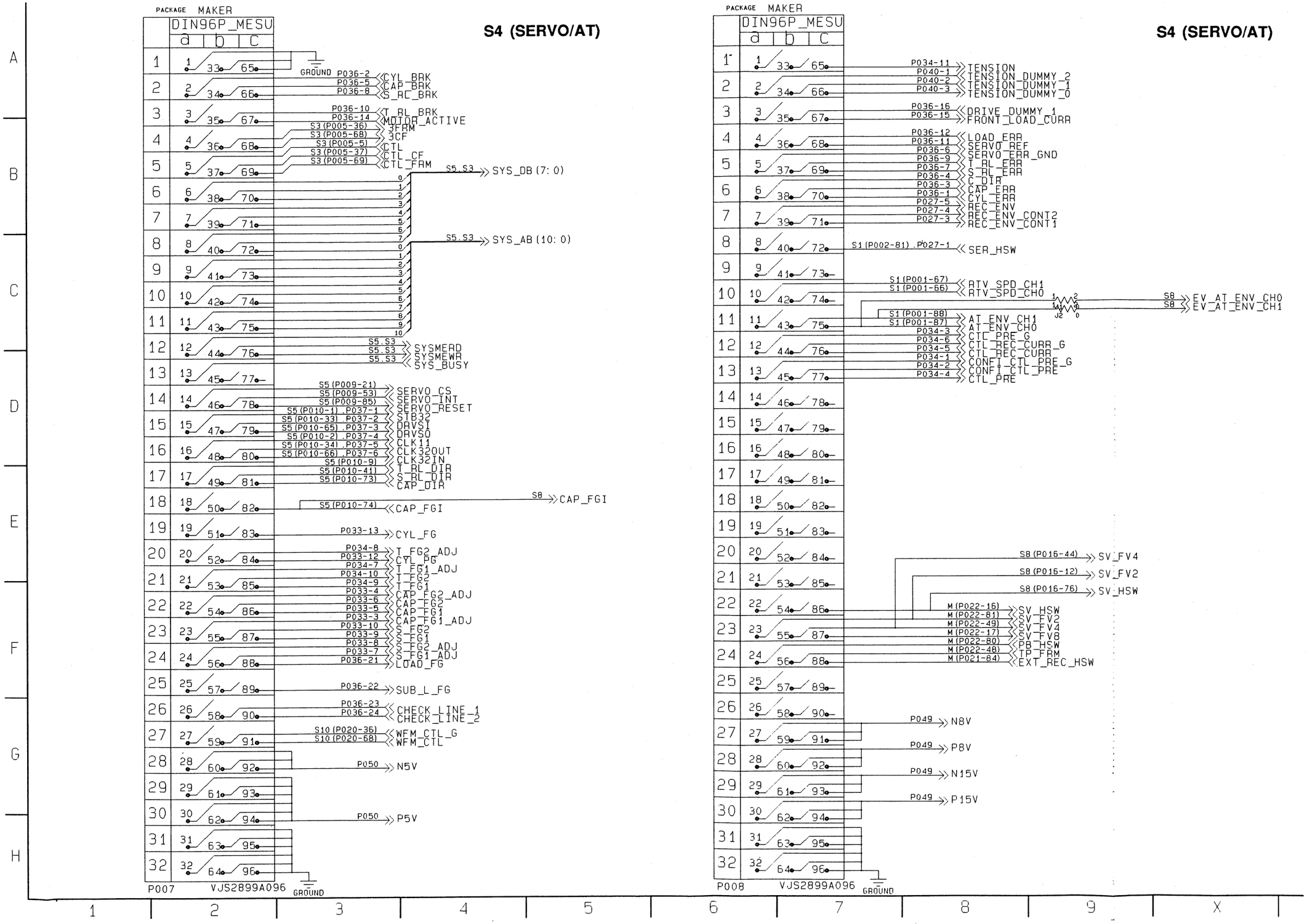

REVERSE SIDE

MAIN MOTHER 1/11, 2/11

MAIN MOTHER (4/11) SCHEMATIC DIAGRAM

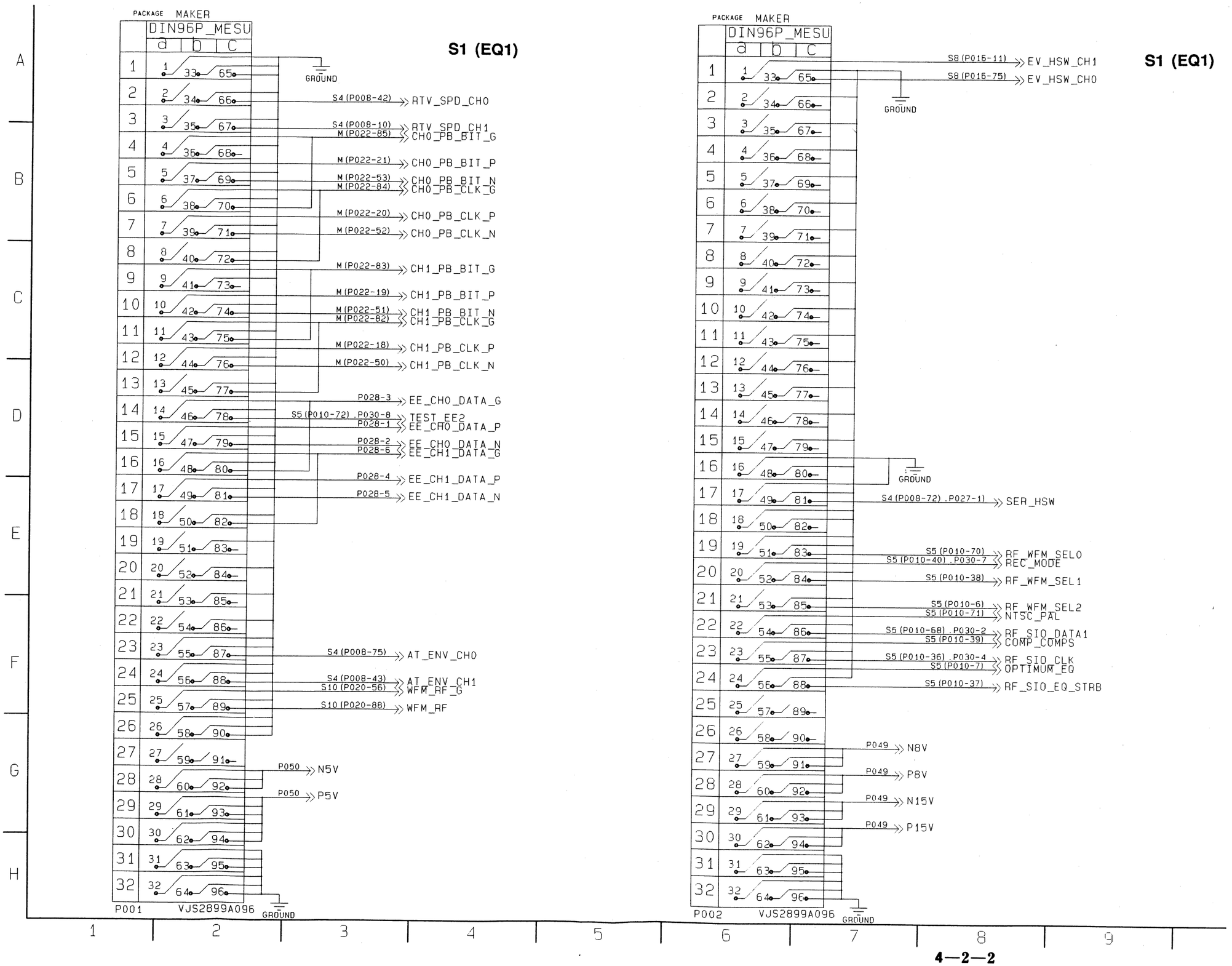

MAIN MOTHER (5/11) SCHEMATIC DIAGRAM

S3 (TC/CUE)

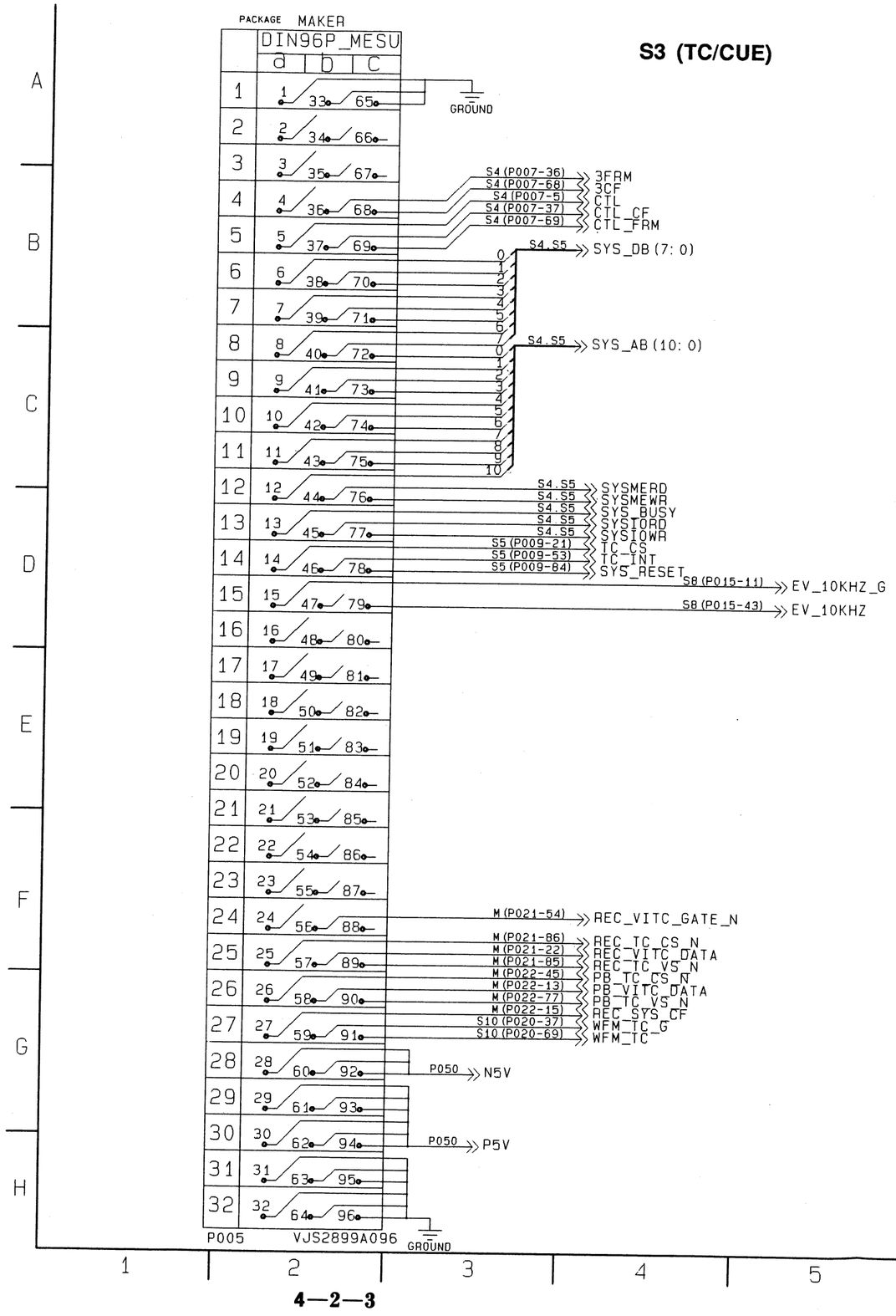

S3 (TC/CUE)

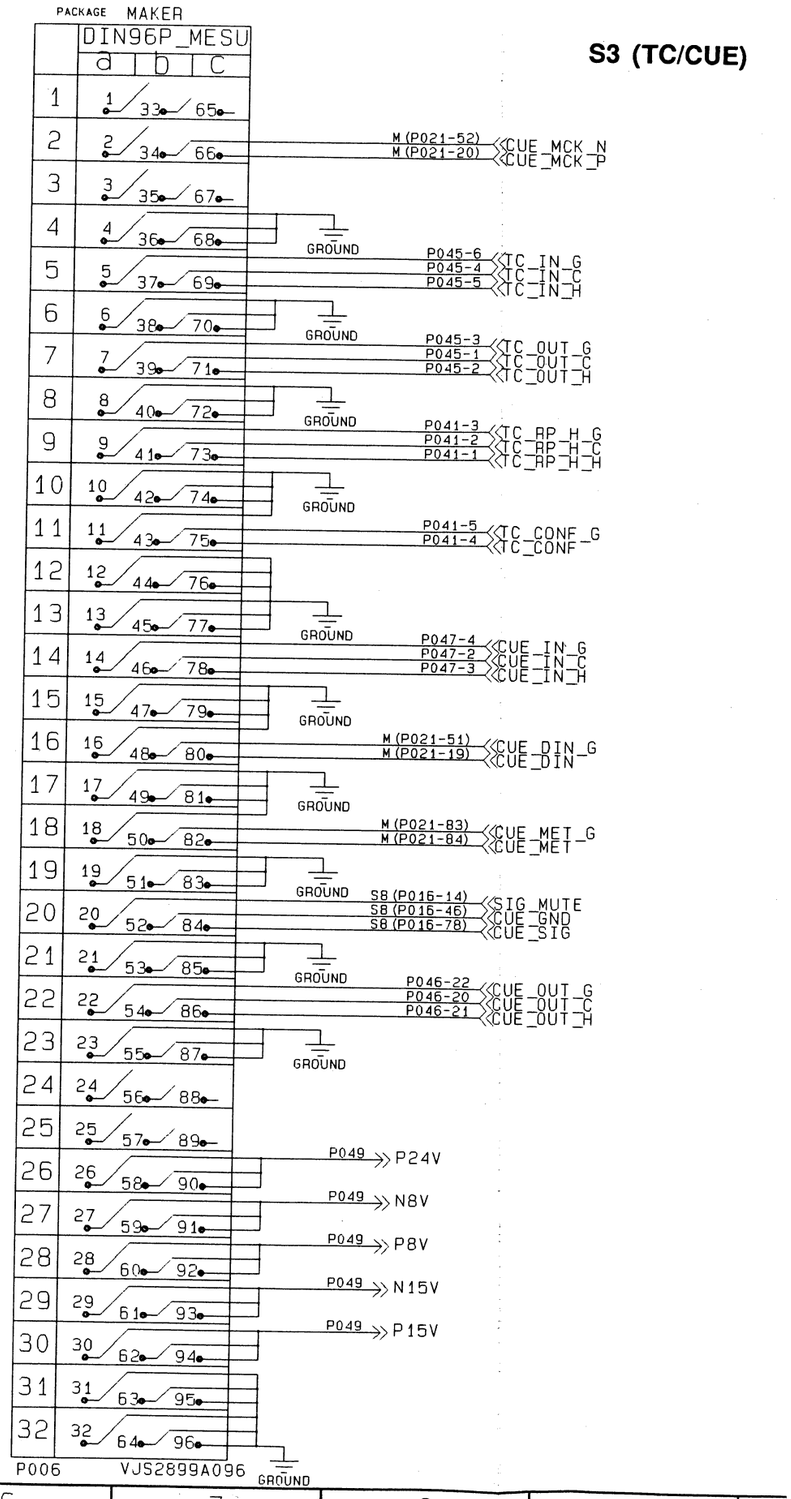

MAIN MOTHER (6/11) SCHEMATIC DIAGRAM

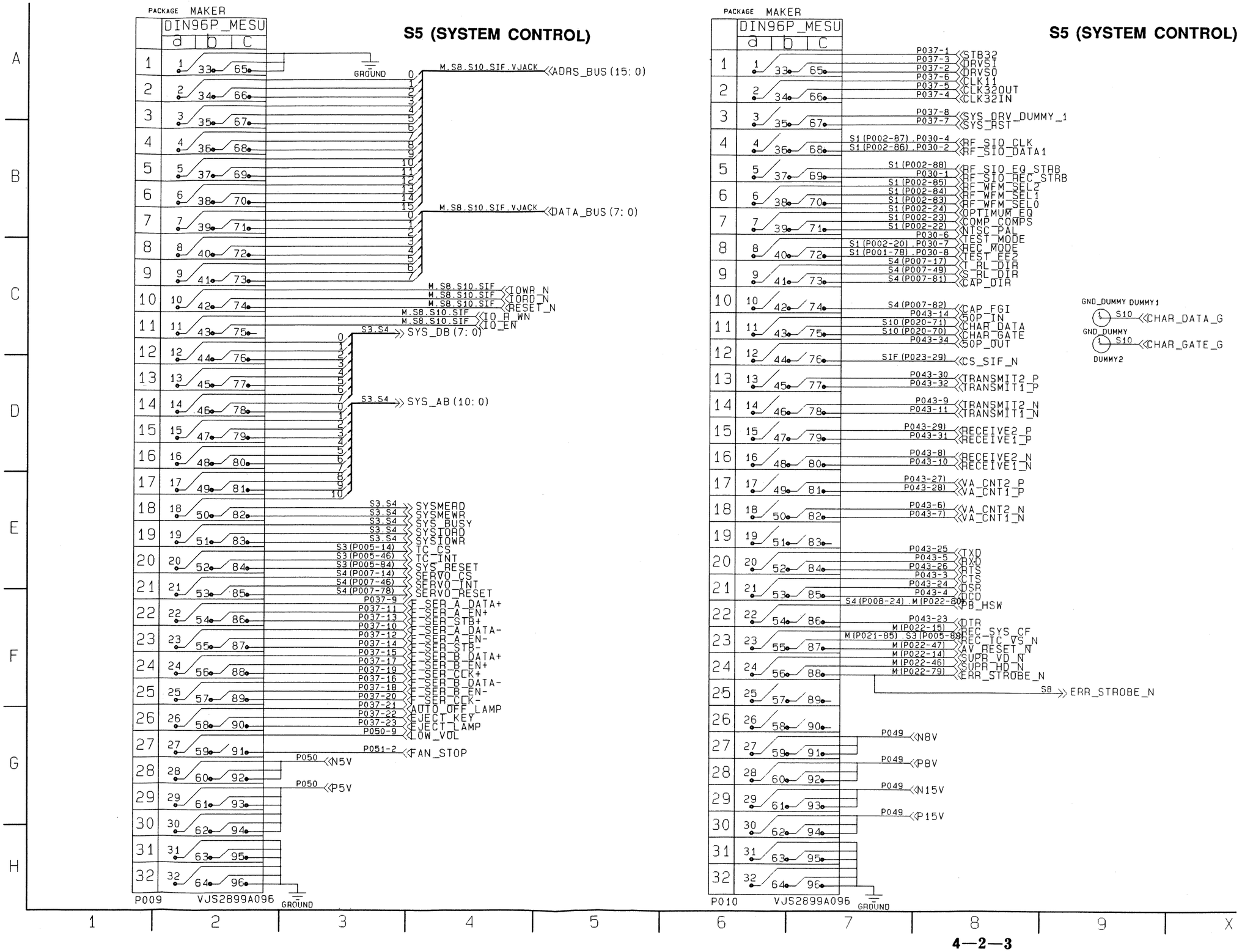

MAIN MOTHER (7/11) SCHEMATIC DIAGRAM

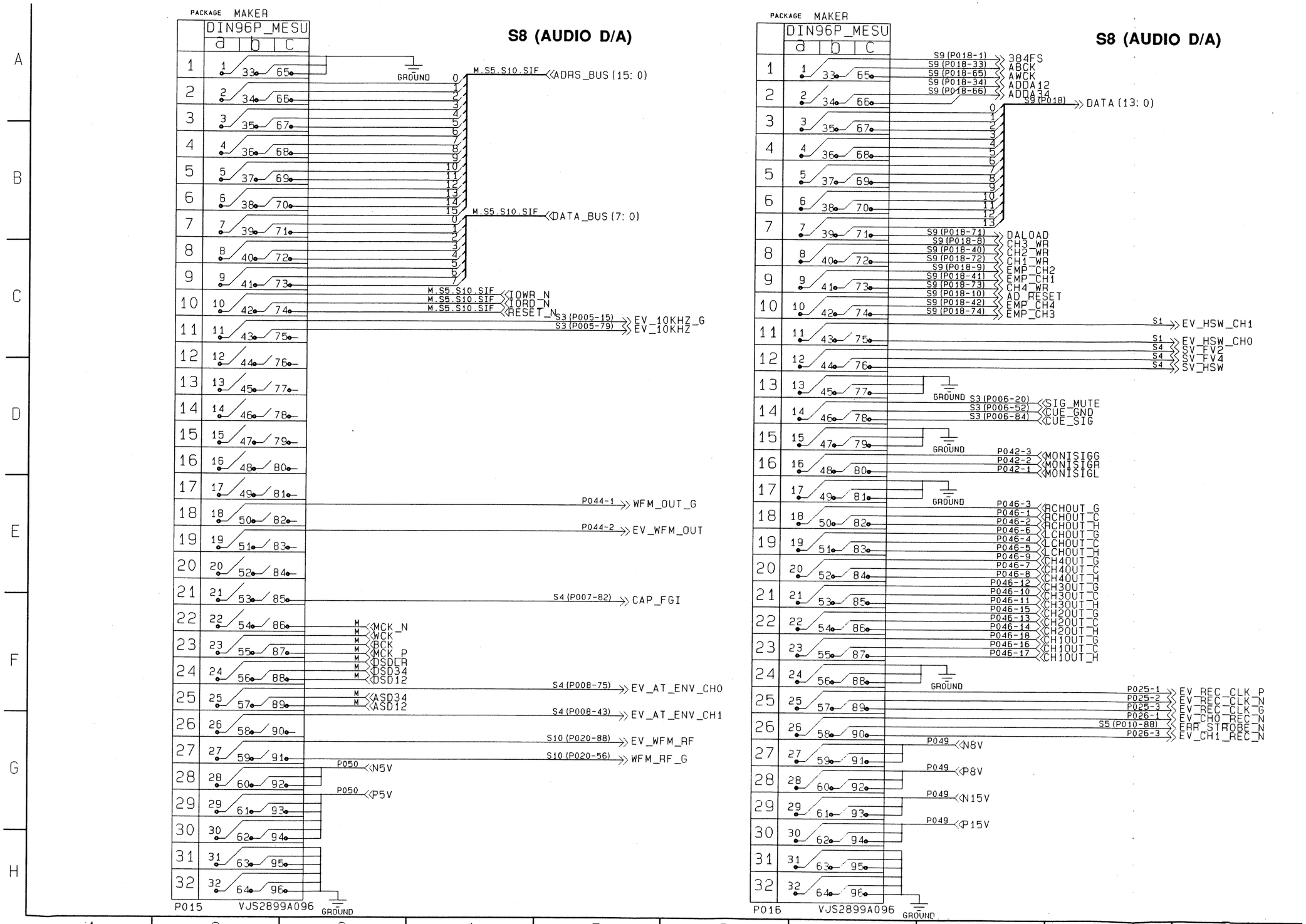

REVERSE SIDE

MAIN MOTHER 5/11, 6/11

MAIN MOTHER (8/11) SCHEMATIC DIAGRAM

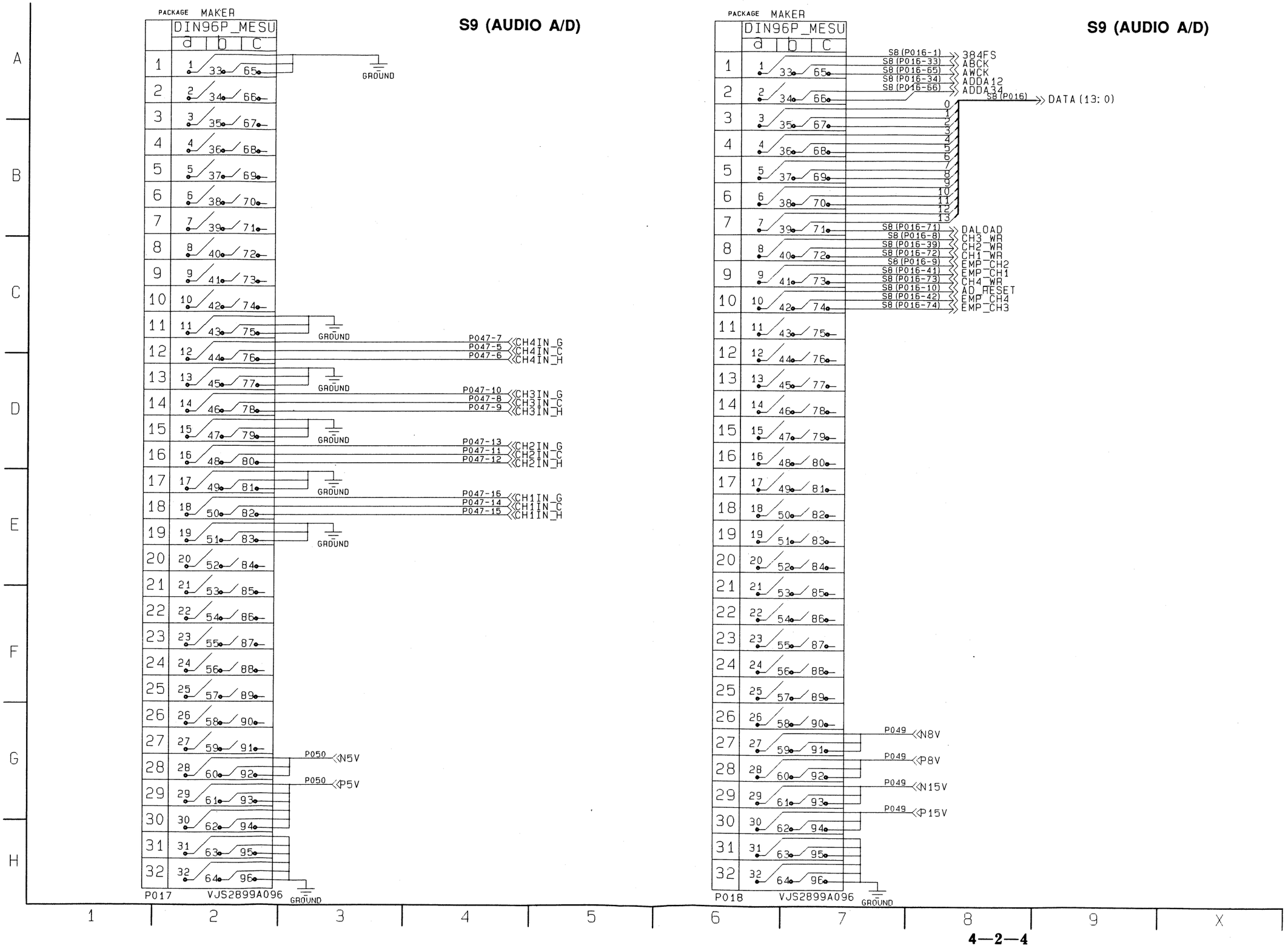

MAIN MOTHER (9/11) SCHEMATIC DIAGRAM

(SERIAL I/F)

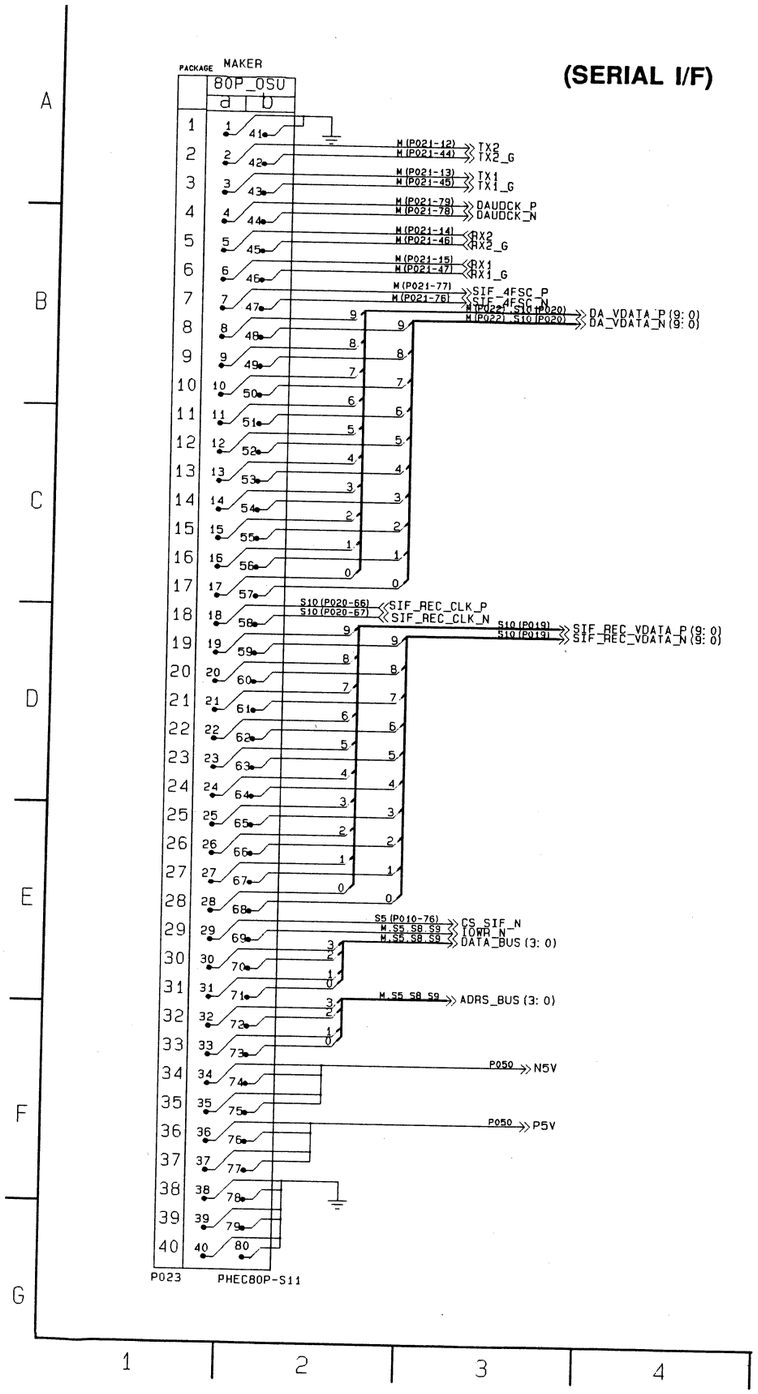

MAIN MOTHER (10/11) SCHEMATIC DIAGRAM

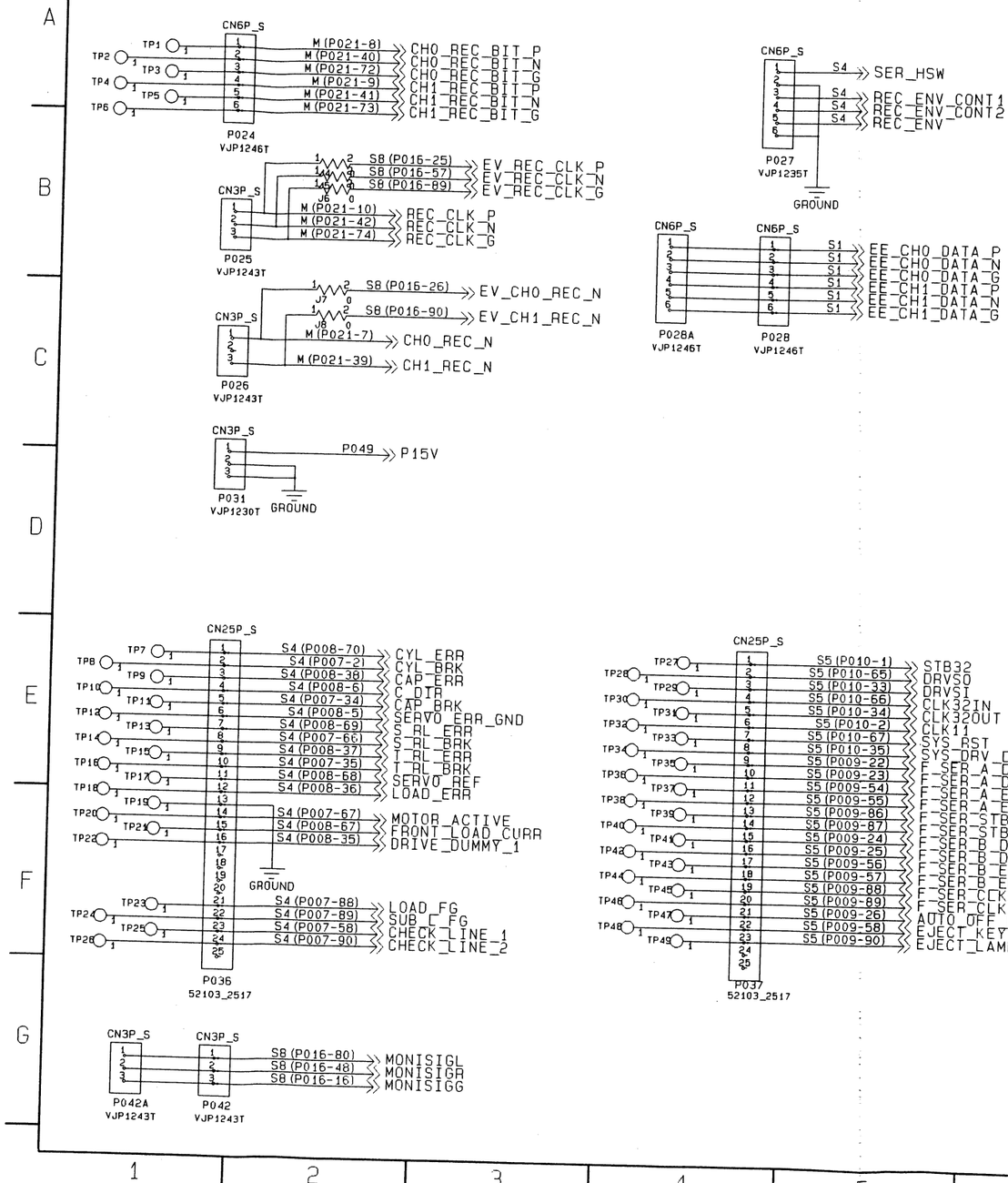

MAIN MOTHER (11/11) SCHEMATIC DIAGRAM

(VIDEO JACK)

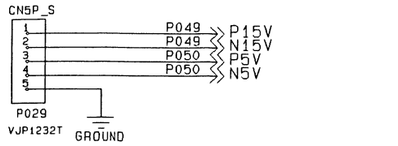

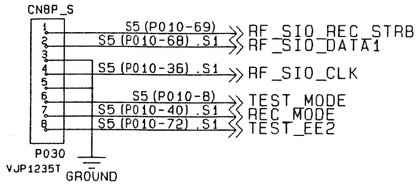

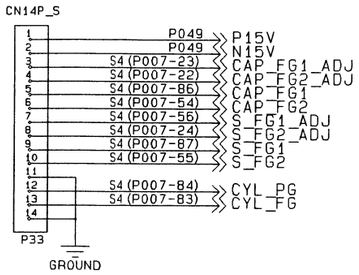

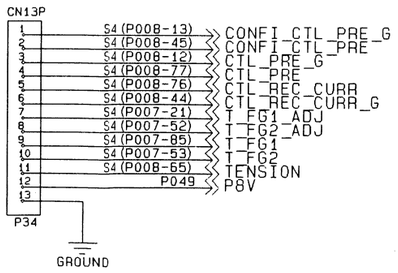

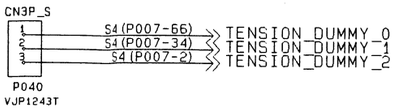

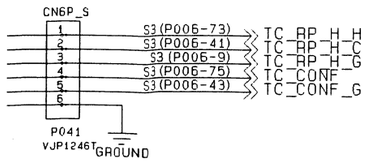

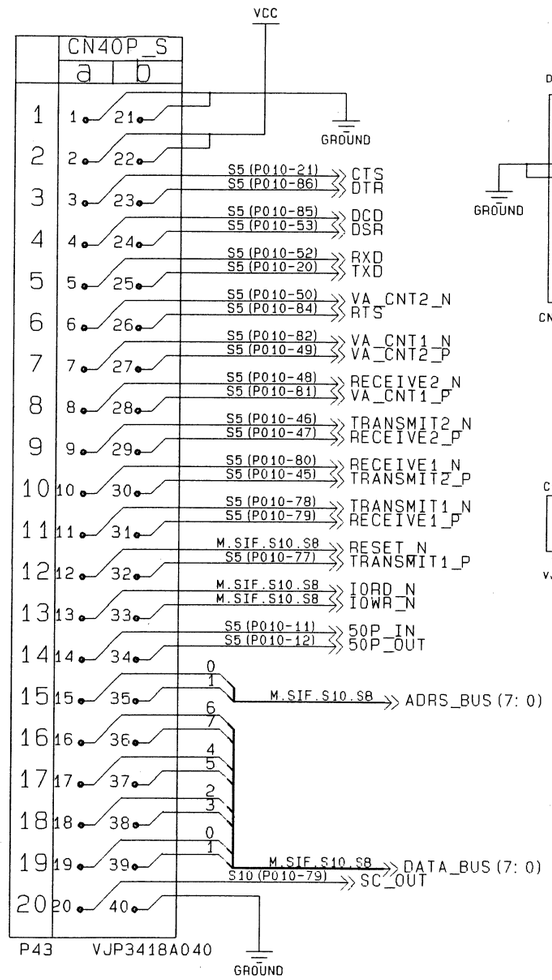

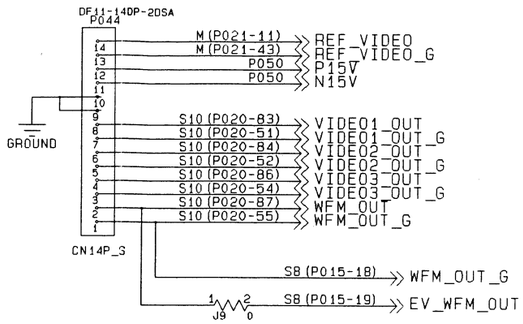

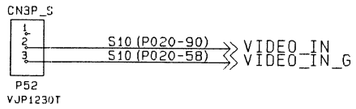

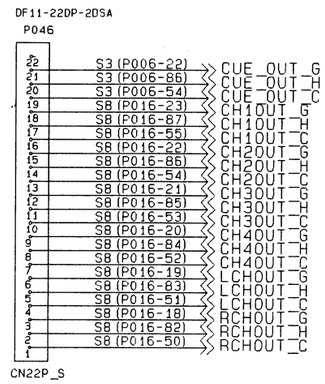

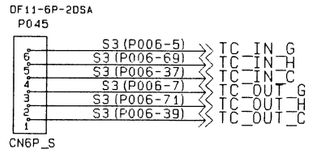

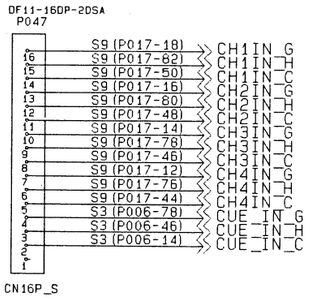

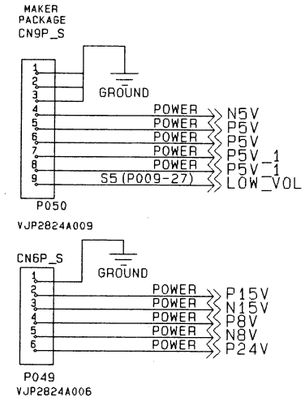

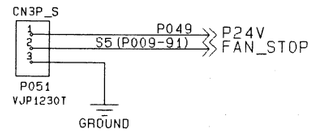

INTERCONNECTION SCHEMATIC DIAGRAM (1/2)

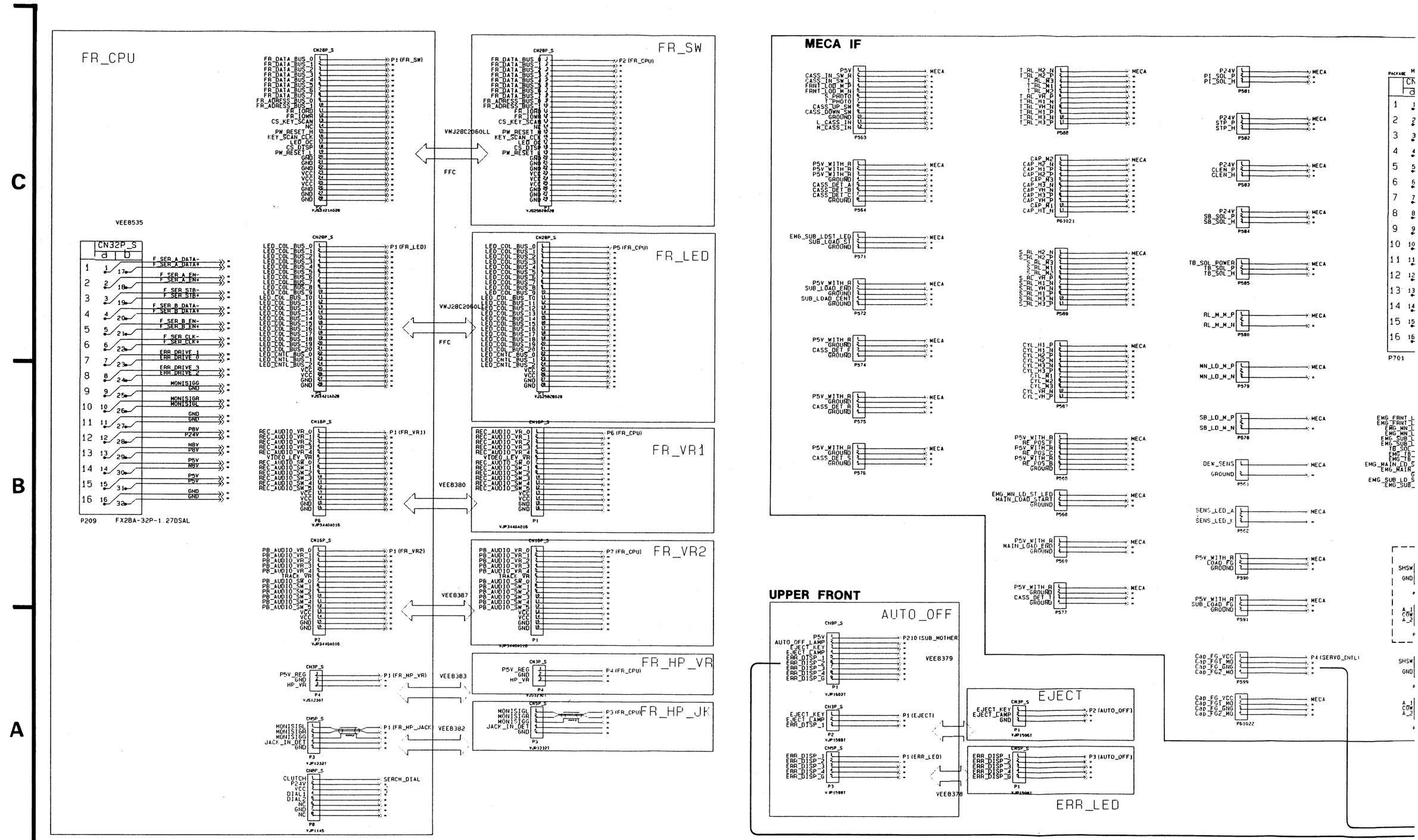

REVERSE SIDE

MAIN MOTHER 9/11, 10/11, 11/11

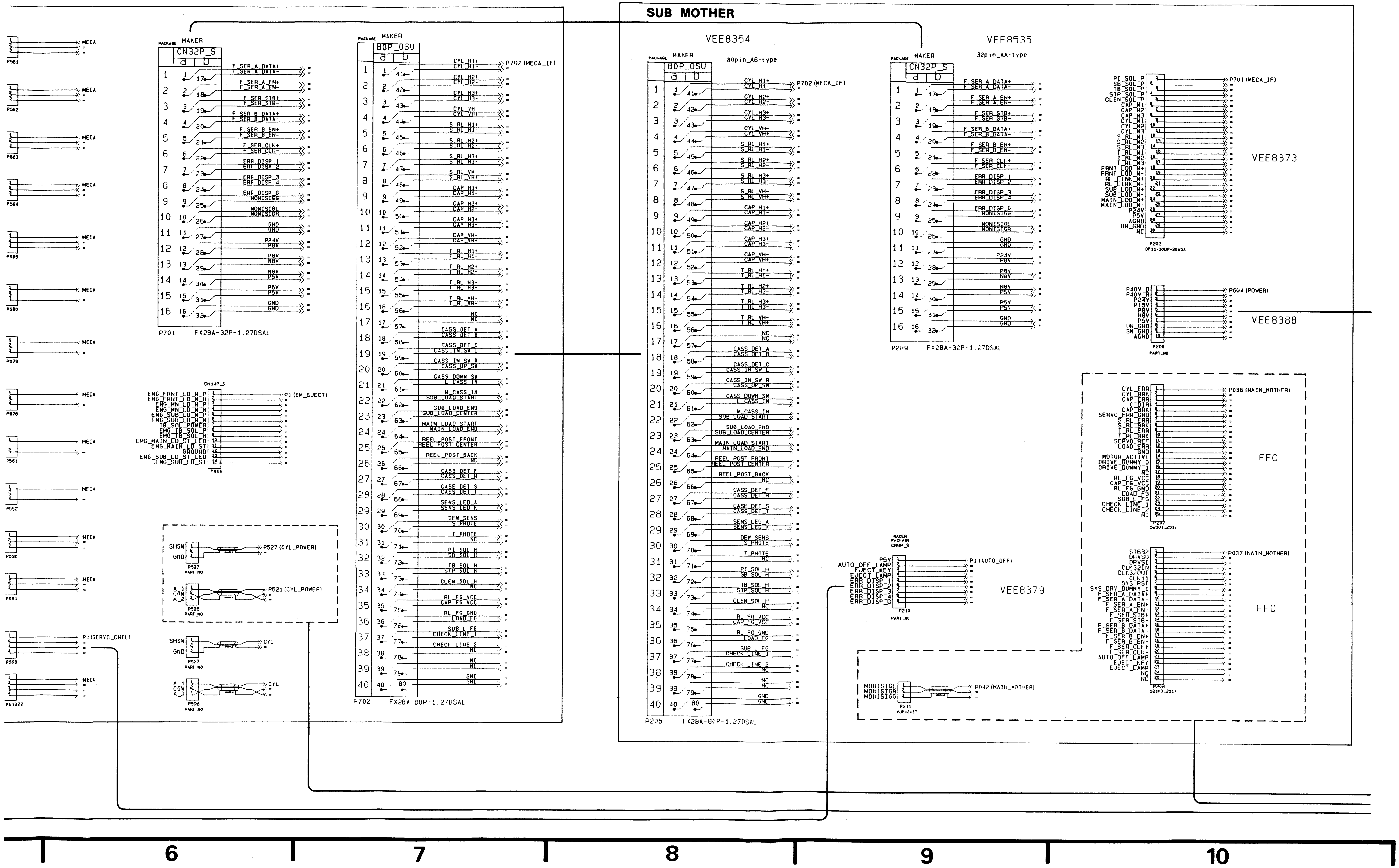
SUB MOTHER
VEE8354
80pin_AB-type
VEE8535
32pin_AA-type
VEE8373
VEE8388
VEE8379
FFC
FFC
CN32P_S
80P_0SU
P701
FX2BA-32P-1.27DSAL
P702
FX2BA-80P-1.27DSAL
P205
FX2BA-80P-1.27DSAL
P209
FX2BA-32P-1.27DSAL
P702 (MECA_IF)
P701 (MECA_IF)
P604 (POWER)
P036 (MAIN_MOTHER)
P037 (MAIN_MOTHER)
P042 (MAIN_MOTHER)
P1 (AUTO_OFF)
P527 (CYL_POWER)
P521 (CYL_POWER)
P4(SERVO_CNTL)
P1 (EM_EJECT)
6
7
8
9
10

INTERCONNECTION SCHEMATIC DIAGRAM (2/2)

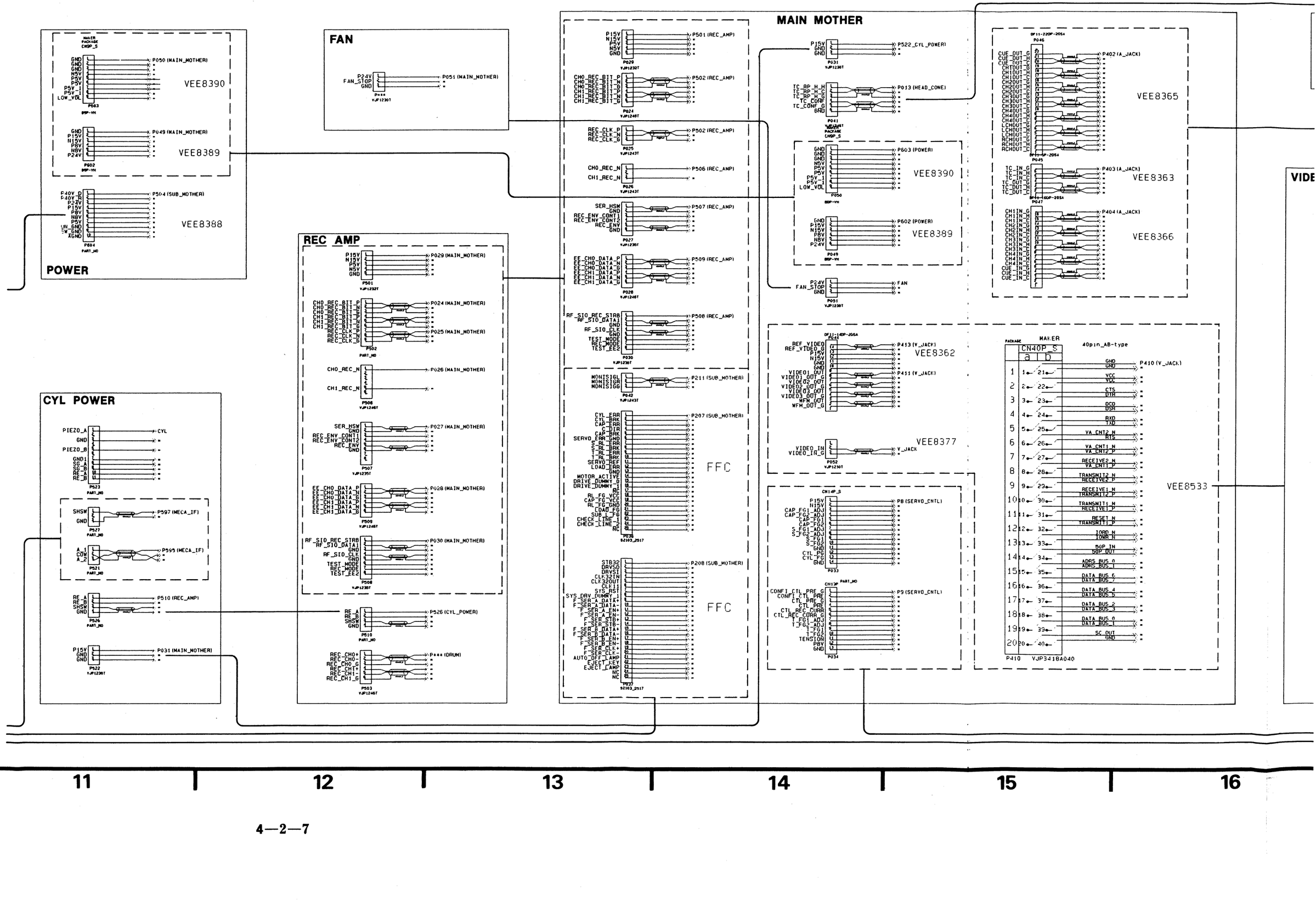

E8365

E8363

E8366

410 (V_JACK)

VEE8533

S10 UP

VIDEO_IN
VIDEO_IN_G
P3
PART_NO
P412 (VIDEO_JACK)

VIDEO JACK

VIDEO1_OUT
VIDEO1_OUT_G
VIDEO2_OUT
VIDEO2_OUT_G
VIDEO3_OUT
VIDEO3_OUT_G
MFM_OUT
MFM_OUT_G
P411
PART_NO
P044 (MAIN_MOTHER)
VEE8362

REF_VIDEO
REF_VIDEO_G
P15V
N15V
GND
GND
P413
PART_NO
P044 (MAIN_MOTHER)

VIDEO_IN
VIDEO_IN_G
P412
VJP1230T
P052 (MAIN_MOTHER)
VEE8377

MAKER
PACKAGE
CN40P_S
40pin_AB-type

	a		b	
1	1	21		SC_OUT / GND
2	2	22		DATA_BUS_0 / DATA_BUS_1
3	3	23		DATA_BUS_2 / DATA_BUS_3
4	4	24		DATA_BUS_4 / DATA_BUS_5
5	5	25		DATA_BUS_6 / DATA_BUS_7
6	6	26		ADRS_BUS_0 / ADRS_BUS_1
7	7	27		50P_IN / 50P_OUT
8	8	28		IORD_N / IOWR_N
9	9	29		RESET_N / TRANSMIT1_P
10	10	30		TRANSMIT1_N / RECEIVE1_P
11	11	31		RECEIVE1_N / TRANSMIT2_P
12	12	32		TRANSMIT2_N / RECEIVE2_P
13	13	33		RECEIVE2_N / VA_CNT1_P
14	14	34		VA_CNT1_N / VA_CNT2_P
15	15	35		VA_CNT2_N / RTS
16	16	36		RXD / TXD
17	17	37		DCD / DSR
18	18	38		CTS / DTR
19	19	39		VCC / VCC
20	20	40		GND / GND

P410 VJP3418B040

VEE8533

AUDIO JACK

DF11-20DP-2DSA
P404
CUE_OUT_G
CUE_OUT_H
CUE_OUT_C
CH1OUT_G
CH1OUT_H
CH1OUT_C
CH2OUT_G
CH2OUT_H
CH2OUT_C
CH3OUT_G
CH3OUT_H
CH3OUT_C
CH4OUT_G
CH4OUT_H
CH4OUT_C
LCHOUT_G
LCHOUT_H
LCHOUT_C
RCHOUT_G
RCHOUT_H
RCHOUT_C
P046 (MAIN_MOTHER)
VEE8365

PART_NO
P403
TC_IN_G
TC_IN_H
TC_IN_C
TC_OUT_G
TC_OUT_H
TC_OUT_C
P045 (MAIN_MOTHER)
VEE8363

DF11-16DP-2DSA
P402
CH1IN_G
CH1IN_H
CH1IN_C
CH2IN_G
CH2IN_H
CH2IN_C
CH3IN_G
CH3IN_H
CH3IN_C
CH4IN_G
CH4IN_H
CH4IN_C
CUE_IN_G
CUE_IN_H
CUE_IN_C
P047 (MAIN_MOTHER)
VEE8366

PART_NO
P401
CH12_D_AUD_IN_G
CH12_D_AUD_IN_H
CH12_D_AUD_IN_C
CH34_D_AUD_IN_G
CH34_D_AUD_IN_H
CH34_D_AUD_IN_C
CH12_D_AUD_OUT_G
CH12_D_AUD_OUT_H
CH12_D_AUD_OUT_C
CH34_D_AUD_OUT_G
CH34_D_AUD_OUT_H
CH34_D_AUD_OUT_C
P7 (S_IF)
VEE8364

SIF

S_IN
S_IN_G
P2
PART_NO
REAR_PANEL

S_IN_THROUGH_P
S_IN_THROUGH_N
S_IN_THROUGH_G
P4
PART_NO
P420 (SIF_IO)

S_OUT_P
S_OUT_N
S_OUT_G
5V
GND
P3
PART_NO
P420 (SIF_IO)

CH12_D_AUD_IN_G
CH12_D_AUD_IN_H
CH12_D_AUD_IN_C
CH34_D_AUD_IN_G
CH34_D_AUD_IN_H
CH34_D_AUD_IN_C
CH12_D_AUD_OUT_G
CH12_D_AUD_OUT_H
CH12_D_AUD_OUT_C
CH34_D_AUD_OUT_G
CH34_D_AUD_OUT_H
CH34_D_AUD_OUT_C
P7
PART_NO
P401 (AUDIO_JACK)
VEE8364

SIF IO

MAKER
PACKAGE
CN8P_S
S_IN_THROUGH_P
S_IN_THROUGH_N
S_IN_THROUGH_G
S_OUT_P
S_OUT_N
S_OUT_G
5V
GND
P420
VJP3416
P4 (S_IF)
P3 (S_IF)

SERVO CONTROL

CN14P_S
P15V
N15V
CAP_FG1_ADJ
CAP_FG2_ADJ
CAP_FG1
CAP_FG2
S_FG1_ADJ
S_FG2_ADJ
S_FG1
S_FG2
GND
CYL_PG
CYL_FG
GND
P8
P033 (MAIN_MOTHER)

CN13P
PART_NO
CONFI_CTL_PRE_G
CONFI_CTL_PRE
CTL_PRE_G
CTL_PRE
CTL_REC_CURR
CTL_REC_CURR_G
T_FG1_ADJ
T_FG2_ADJ
T_FG1
T_FG2
TENSION
P8V
GND
P9
P034 (MAIN_MOTHER)

CYL_FG_NO
CYL_FG_G_NO
CYL_PG_P_NO
CYL_PG_N_NO
P1
MECA

S_RL_FG_VCC
S_FG1_NO
S_RL_FG_GND
S_FG2_NO
P2
REEL_CONNECT_P-BOARD

T_RL_FG_VCC
T_FG1_NO
T_RL_FG_GND
T_FG2_NO
P3
REEL_CONNECT_P-BOARD

Cap_FG_VCC
Cap_FG1_NO
Cap_FG_GND
Cap_FG2_NO
P4
P599 (MECA_IF)

TENSION_VCC
TENSION_IN
TENSION_GND
P5
MECA

CTL_HEAD_P
CTL_HEAD_G
CTL_HEAD_N
P6
AC_HEAD

conf_CTL_HEAD_P
conf_CTL_HEAD_G
conf_CTL_HEAD_N
P7
AC_HEAD

HEAD CONNECTION

FULL_E+
FULL_E-
FULL_E_G
CUE_E+
CUE_E-
CUE_E_G
TC_E+
TC_E-
TC_E_G
CTL_E+
CTL_E-
CTL_E_G
CUE_AP+
CUE_AP-
CUE_AP_G
P6
VJP1932T
P4001 (S3)
P4002 (S3)
P4003 (S3)
P4004 (S3)
P4005 (S3)

CUE_CONF
CUE_CONF_G
GND
P12
VJP1230T
P4006 (S3)

TC_RP_H_H
TC_RP_H_C
TC_RP_H_G
TC_CONF
TC_CONF_G
GND
P13
VJP1233T
P041 (MAIN_MOTHER)

FULL_E+
FULL_E-
FULL_E_G
P2
VJP1230T
AC_HEAD

CUE_E+
CUE_E-
CUE_E_G
TC_E+
TC_E-
TC_E_G
CTL_E+
CTL_E-
CTL_E_G
CUE_AP+
CUE_AP-
CUE_AP_G
P3
VJP1239T
AC_HEAD

CUE_CONF
CUE_CONF_G
GND
P8
VJP1230T
AC_HEAD

TC_RP_H_H
TC_RP_H_C
TC_RP_H_G
P4
VJP1230T
AC_HEAD

TC_CONF
TC_CONF_G
GND
P9
VJP1230T
AC_HEAD

S3 UP

FULL_E+
FULL_E-
FULL_E_G
P4001
PART_NO
P6 (HEAD_CN)

CUE_E+
CUE_E-
CUE_E_G
P4002
PART_NO
P6 (HEAD_CN)

TC_E+
TC_E-
TC_E_G
P4003
PART_NO
P6 (HEAD_CN)

CTL_E+
CTL_E-
CTL_E_G
P4004
PART_NO
P6 (HEAD_CN)

CUE_AP+
CUE_AP-
CUE_AP_G
P4005
PART_NO
P6 (HEAD_CN)

CUE_CONF
CUE_CONF_G
GND
P4006
PART_NO
P12 (HEAD_CN)

S1 UP

AT_CH0_AB_G
AT_CH0_AB_P
AT_CH0_AB_N
P1
PART_NO
CYL

AT_CH1_AB_G
AT_CH1_AB_P
AT_CH1_AB_N
P2
PART_NO
CYL

C
B
A

16 17 18 19 20 21

SUB MOTHER (1/3) SCHEMATIC DIAGRAM

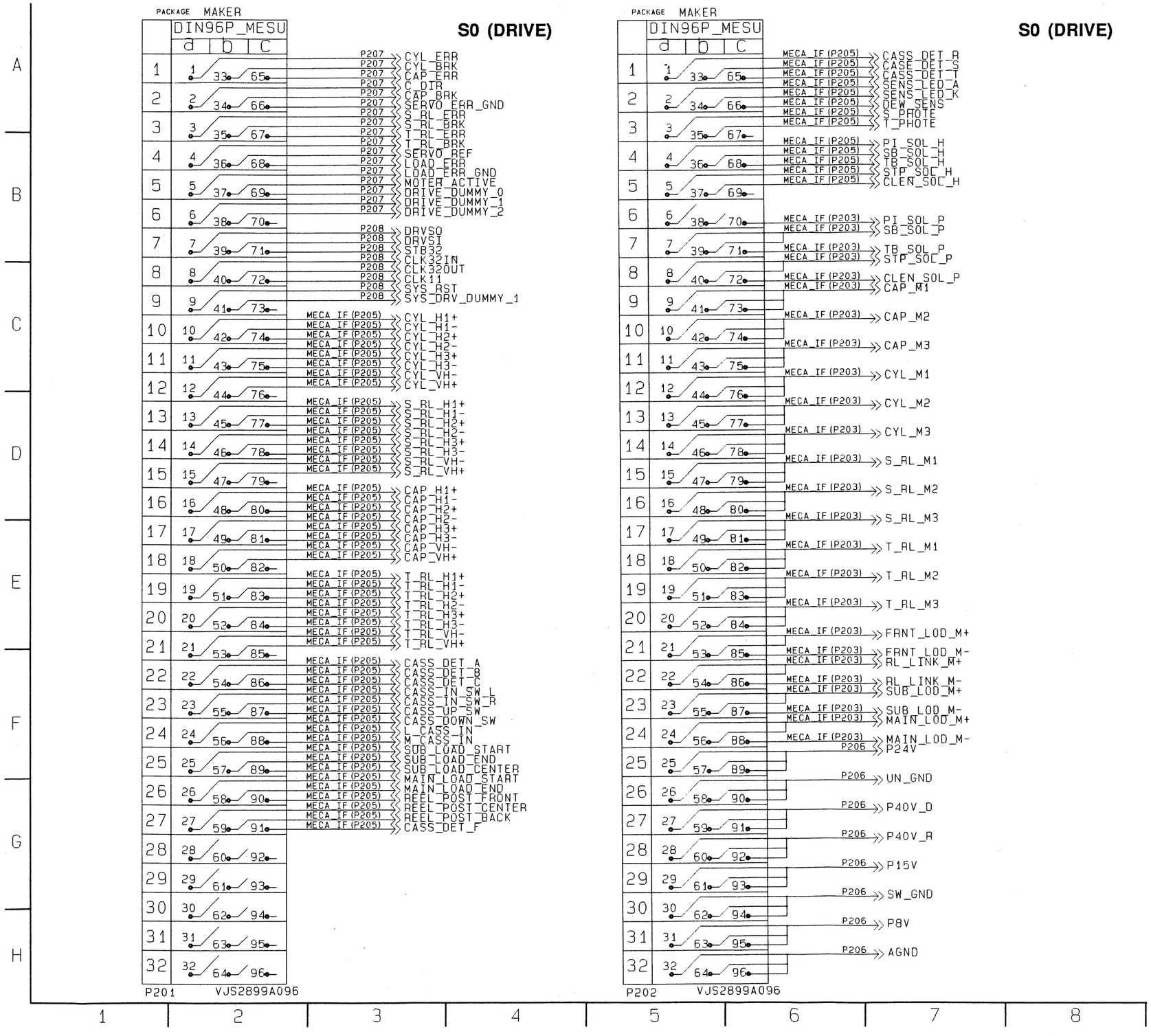

SUB MOTHER (2/3) SCHEMATIC DIAGR

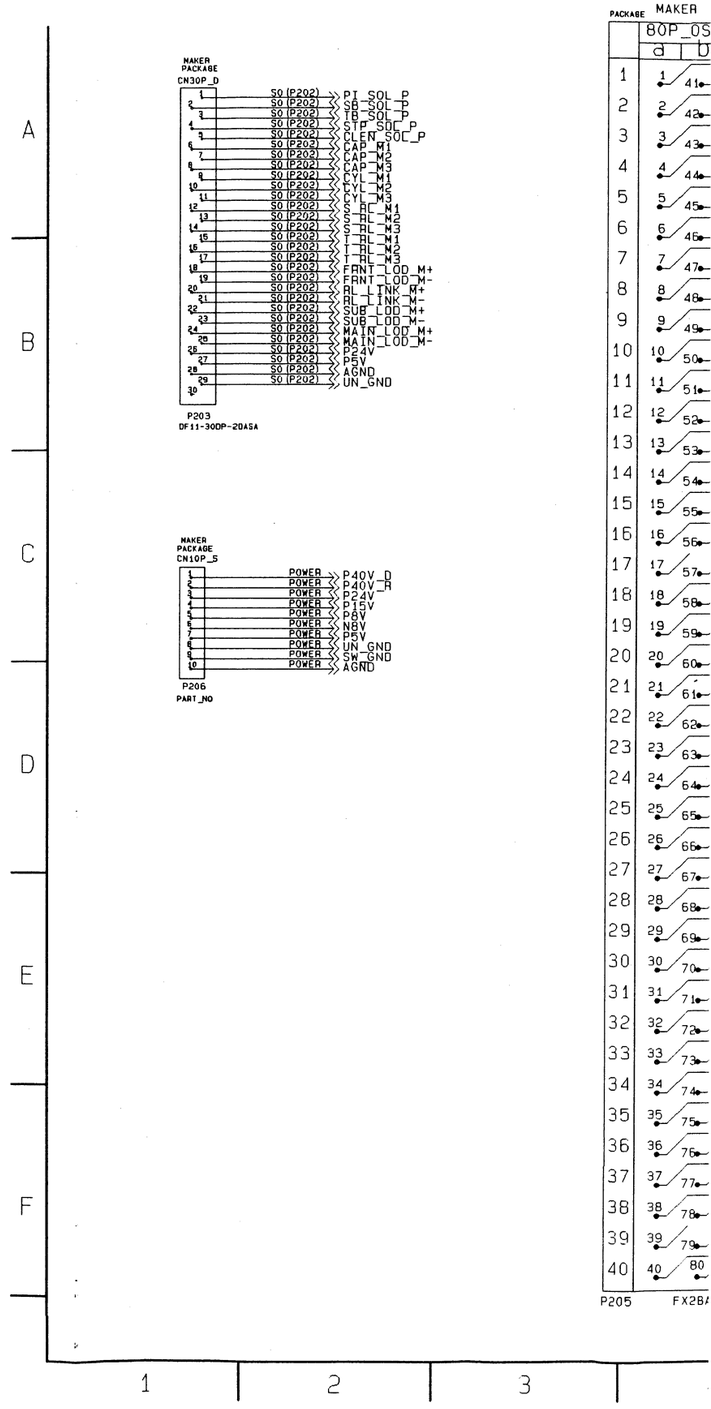

REVERSE SIDE

INTERCONNECTION 2/2

CHEMATIC DIAGRAM

SUB MOTHER (3/3) SCHEMATIC DIAGRAM

(MECHA I/F)

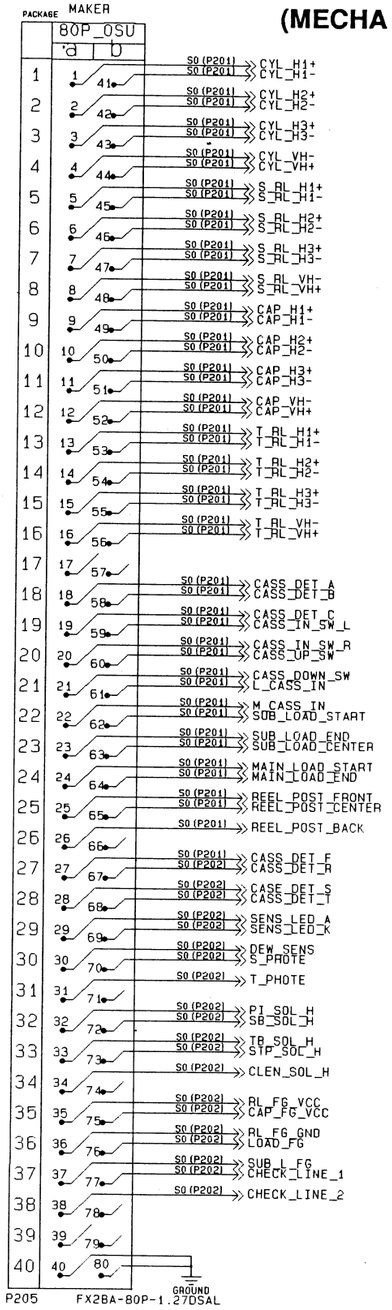

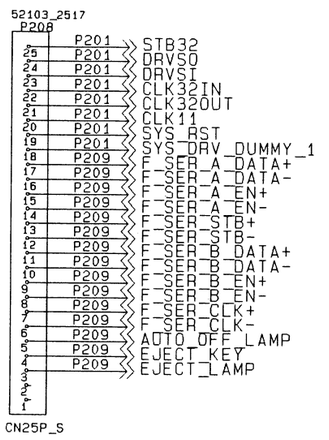

(FR CPU)

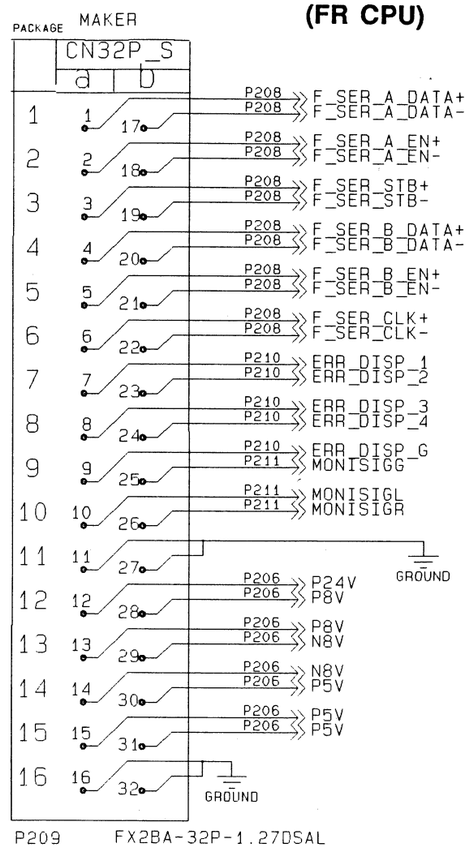

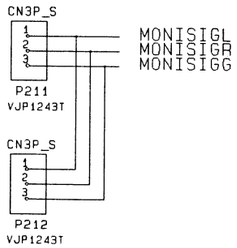

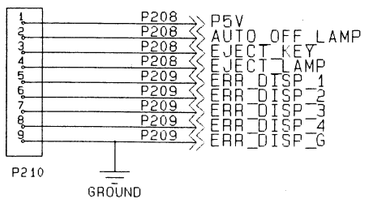

AV DSP (M 1/46) OVERALL SCHEMATIC DIAGRAM

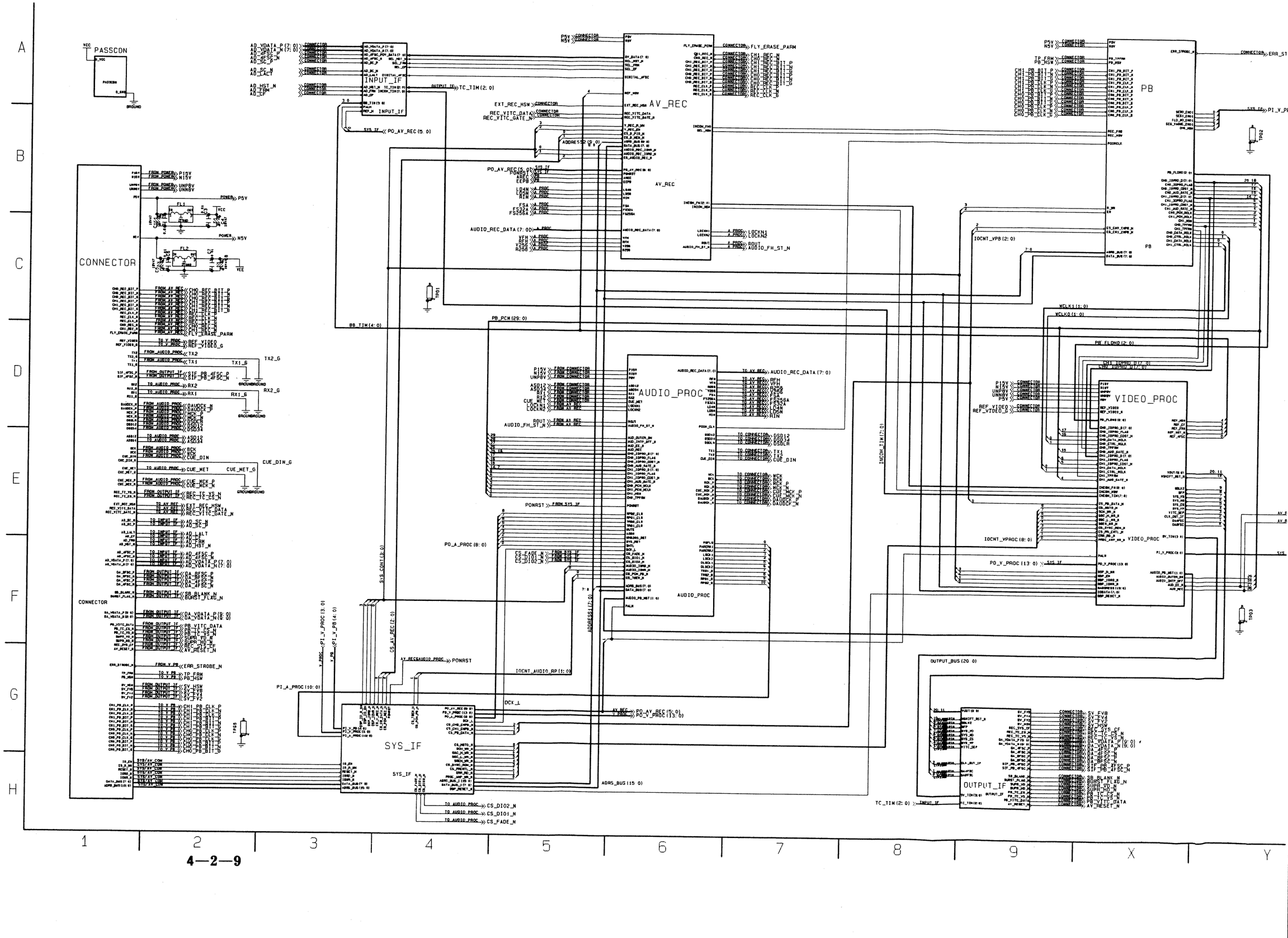

AV DSP (M 2/46) CONNECTOR SCHEMATIC DIAGRAM

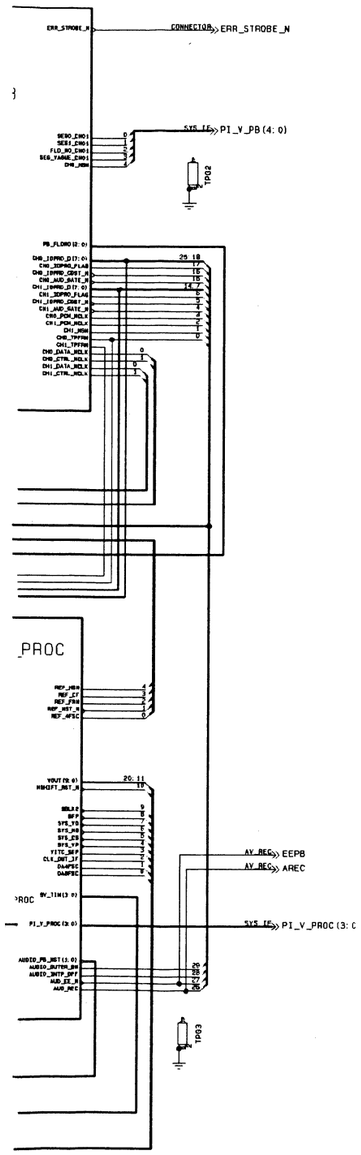

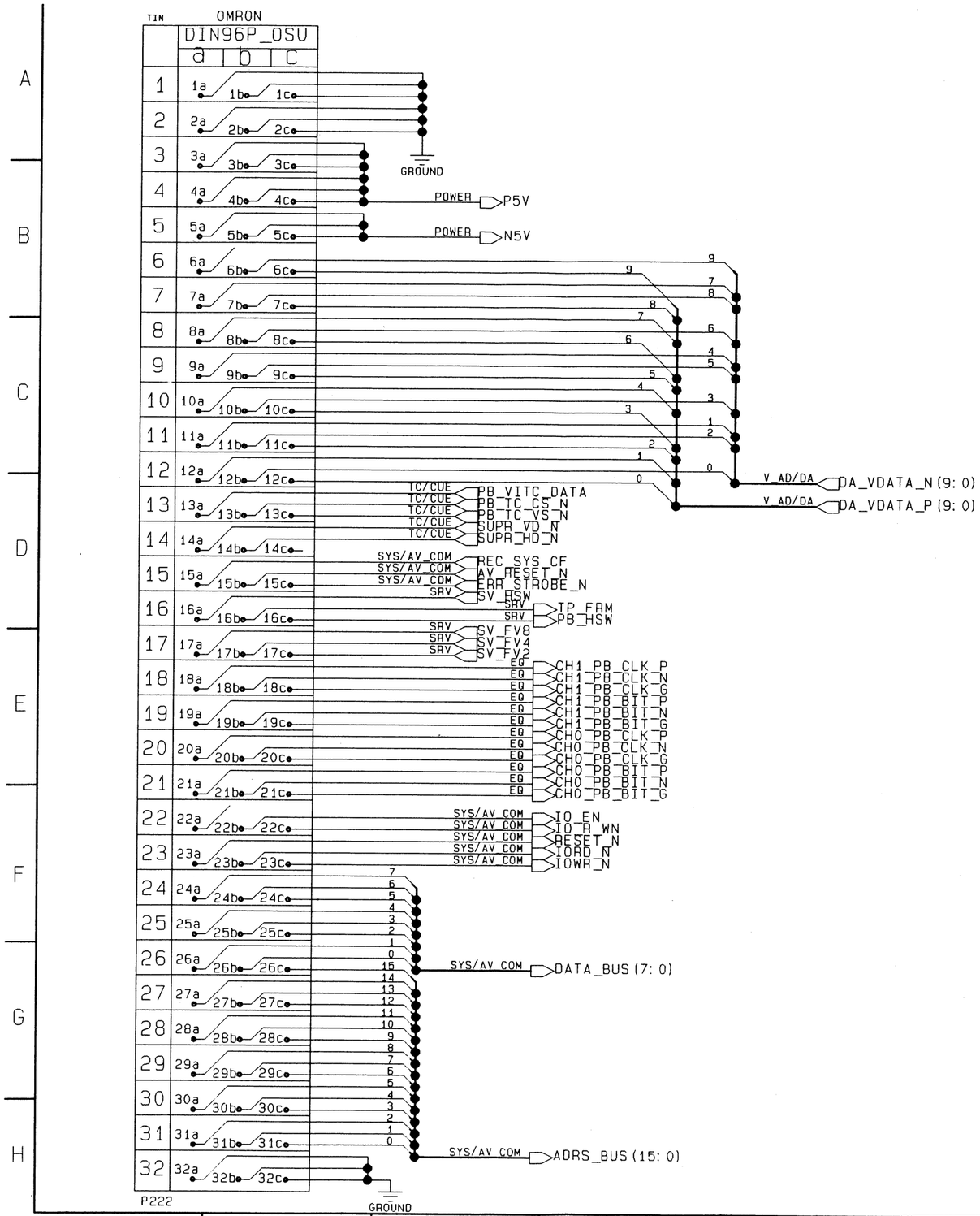

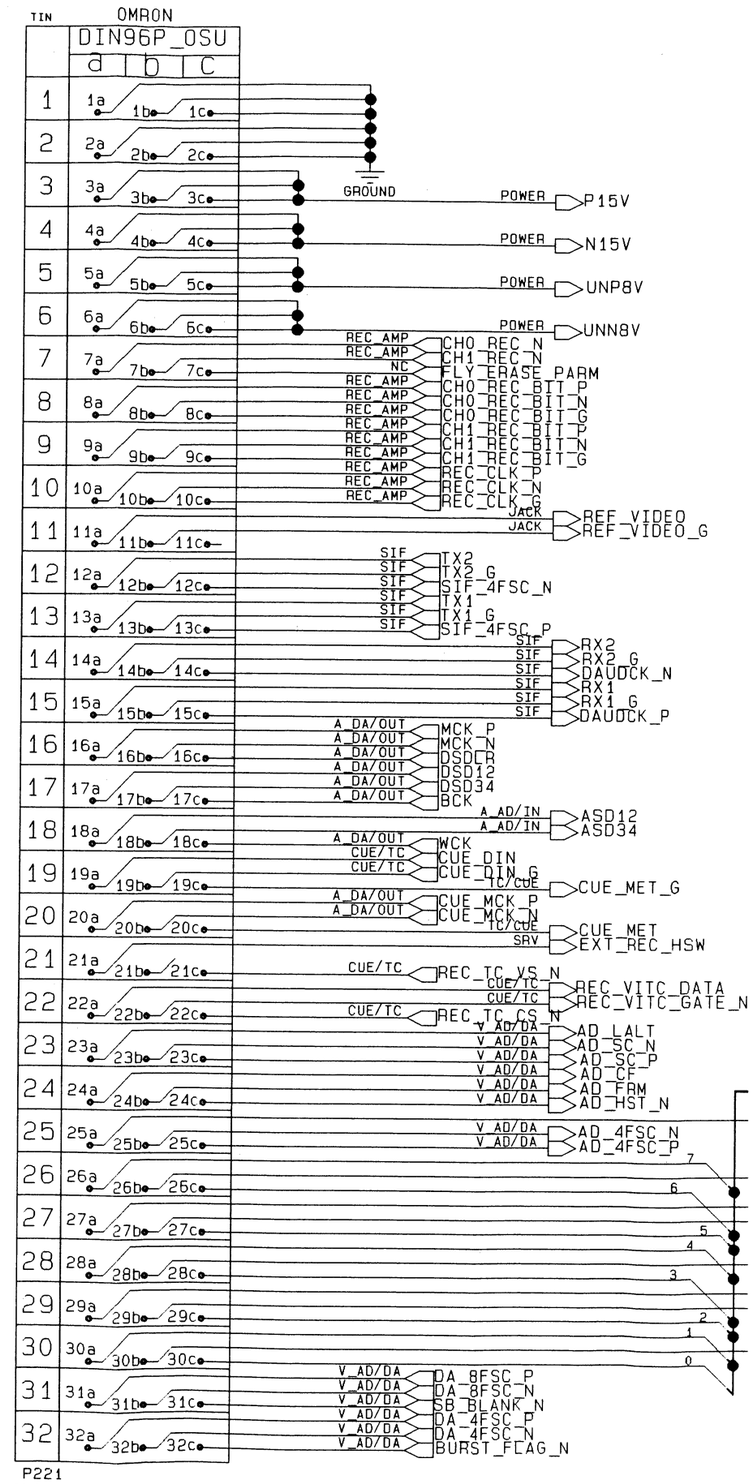

6) CONNECTOR SCHEMATIC DIAGRAM

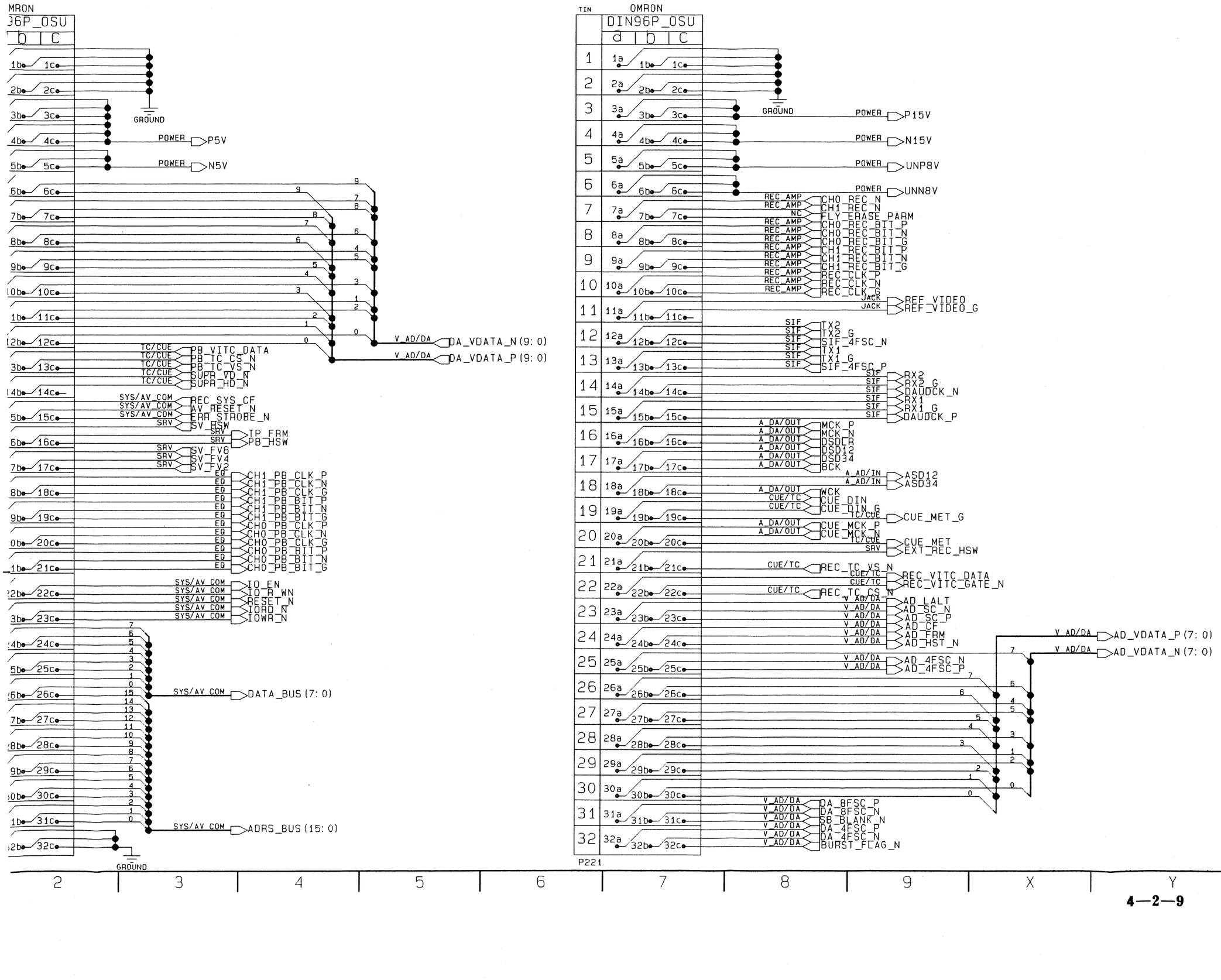

2 3 4 5 6 7 8 9 X Y

REVERSE SIDE

AV DSP (M 3/46, 4/46, 5/46)

AV DSP (M 3/46) PLAYBACK (OVERALL) SCHEMATIC DIAGRAM

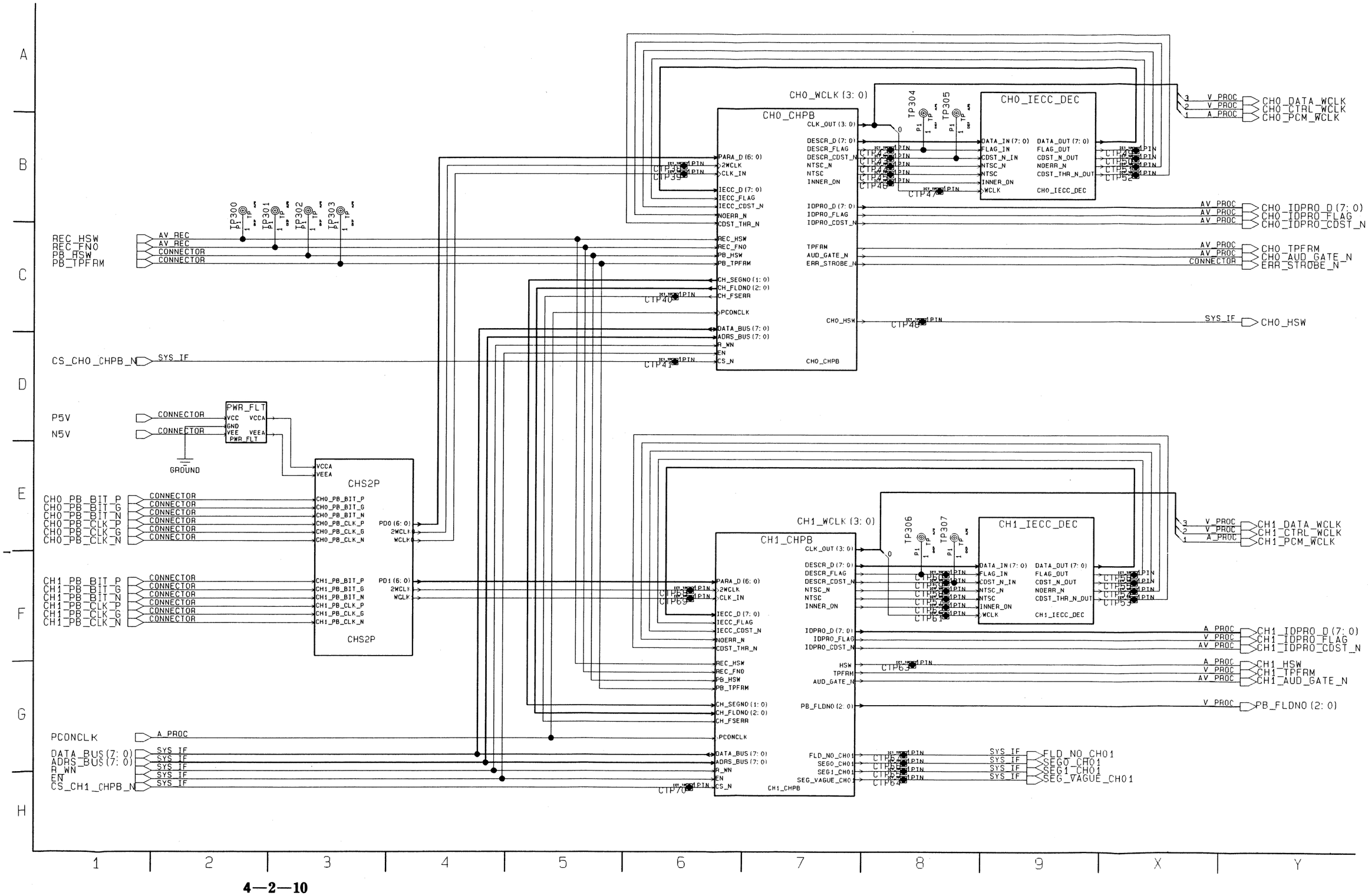

AV DSP (M 4/46) POWER FILTER SCHEMATIC DIAGRAM

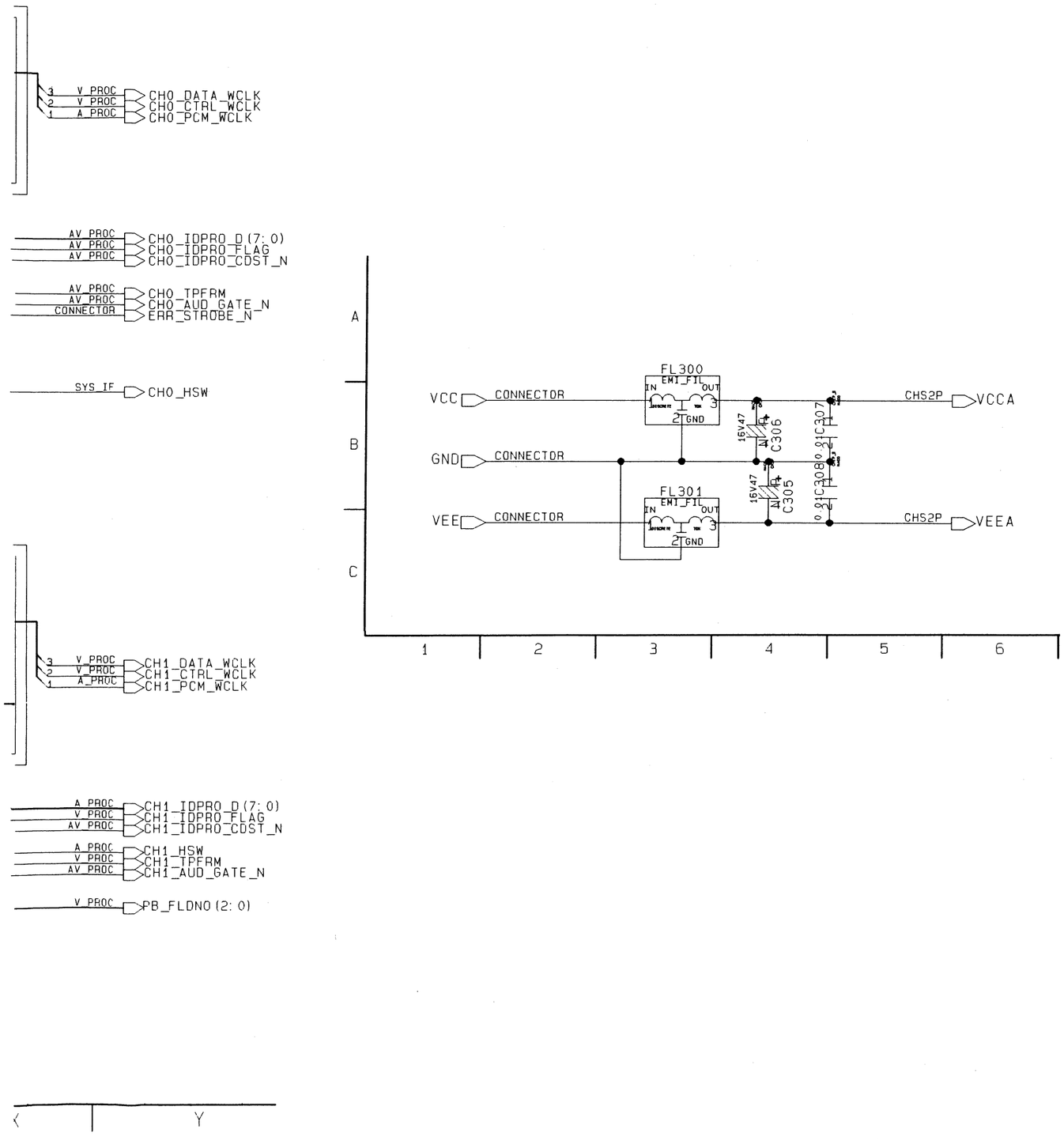

AV DSP (M 5/46) PB/CHS2P SCHEMATIC DIAGRAM

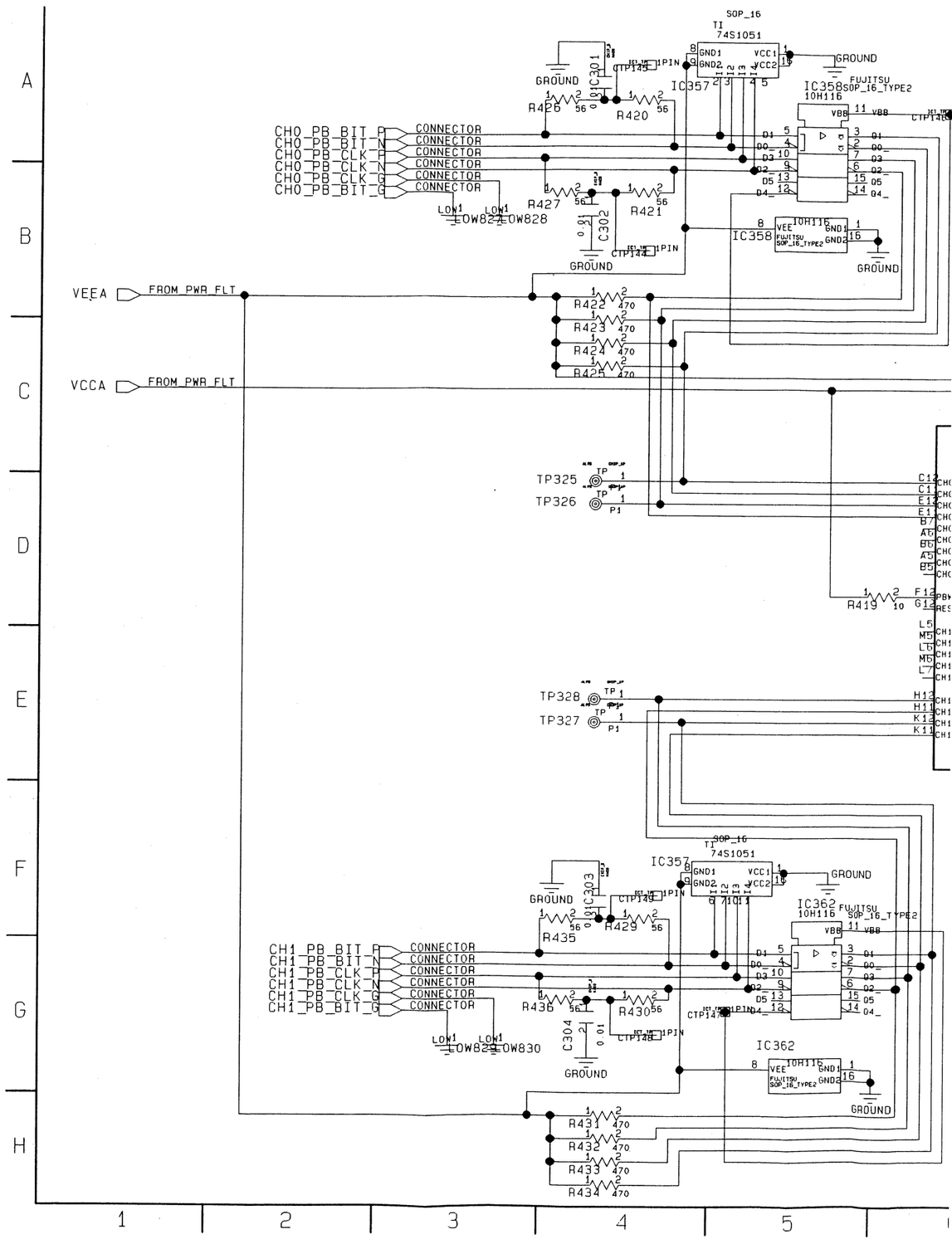

AV DSP (M 5/46) PB/CHS2P SCHEMATIC DIAGRAM

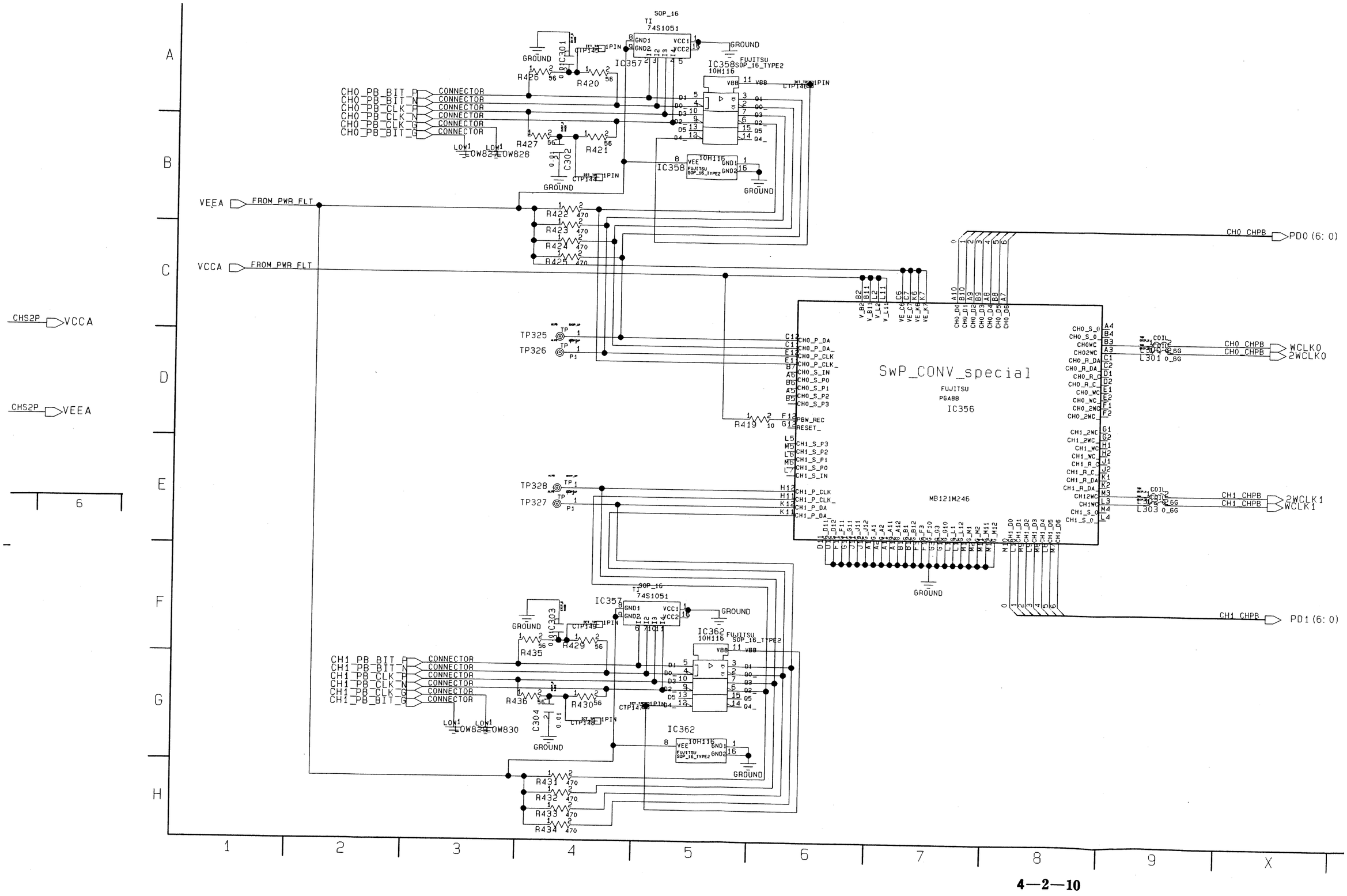

AV DSP (M 6/46) PB/CH0 CHPB SCHEMATIC DIAGRAM

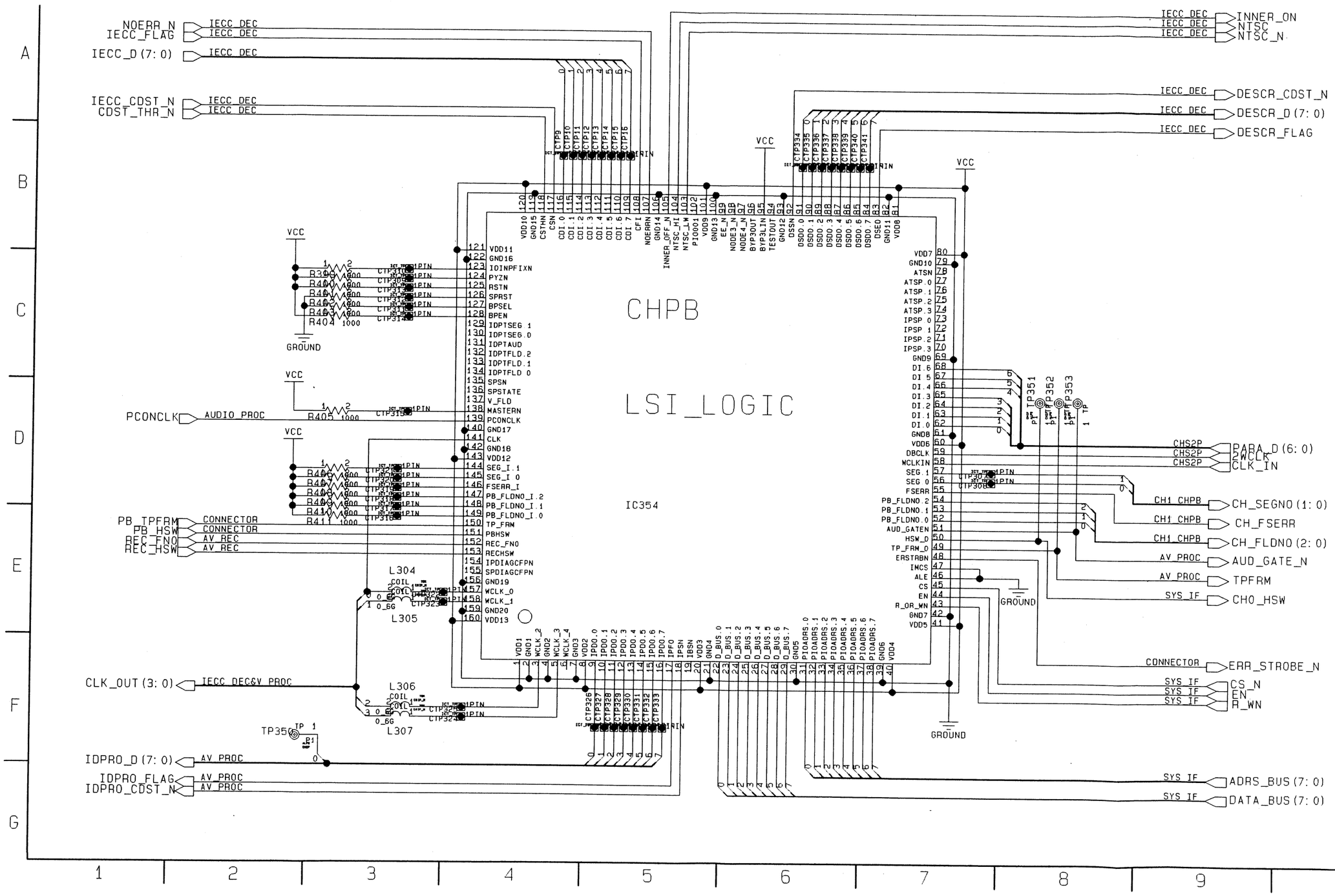

AV DSP (M 7/46) PB/CH1 CHPB SCHEMATIC DIAGRAM

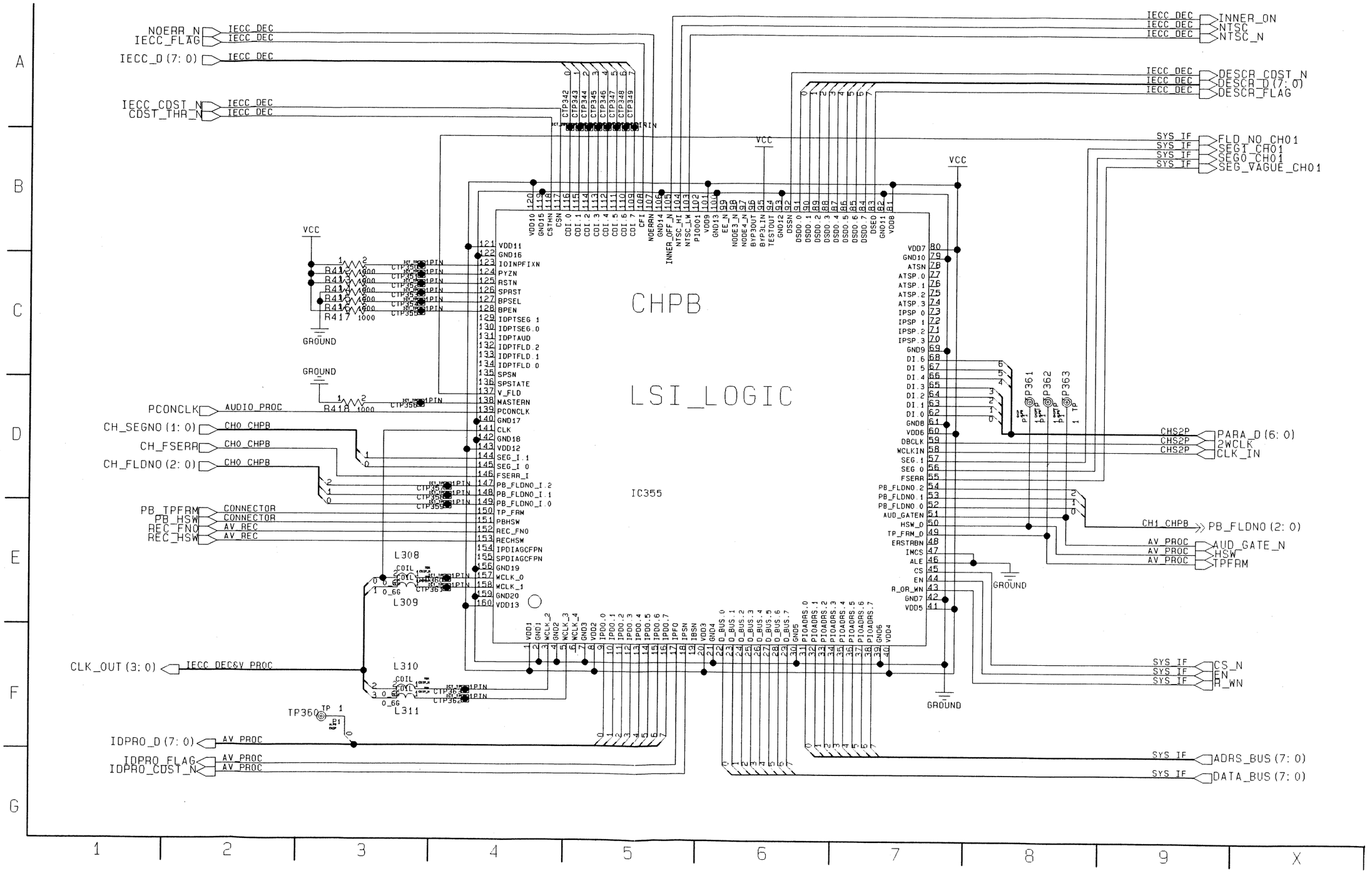

AV DSP (M 8/46) PB/CH0 IECC DECODER SCHEMATIC DIAGRAM

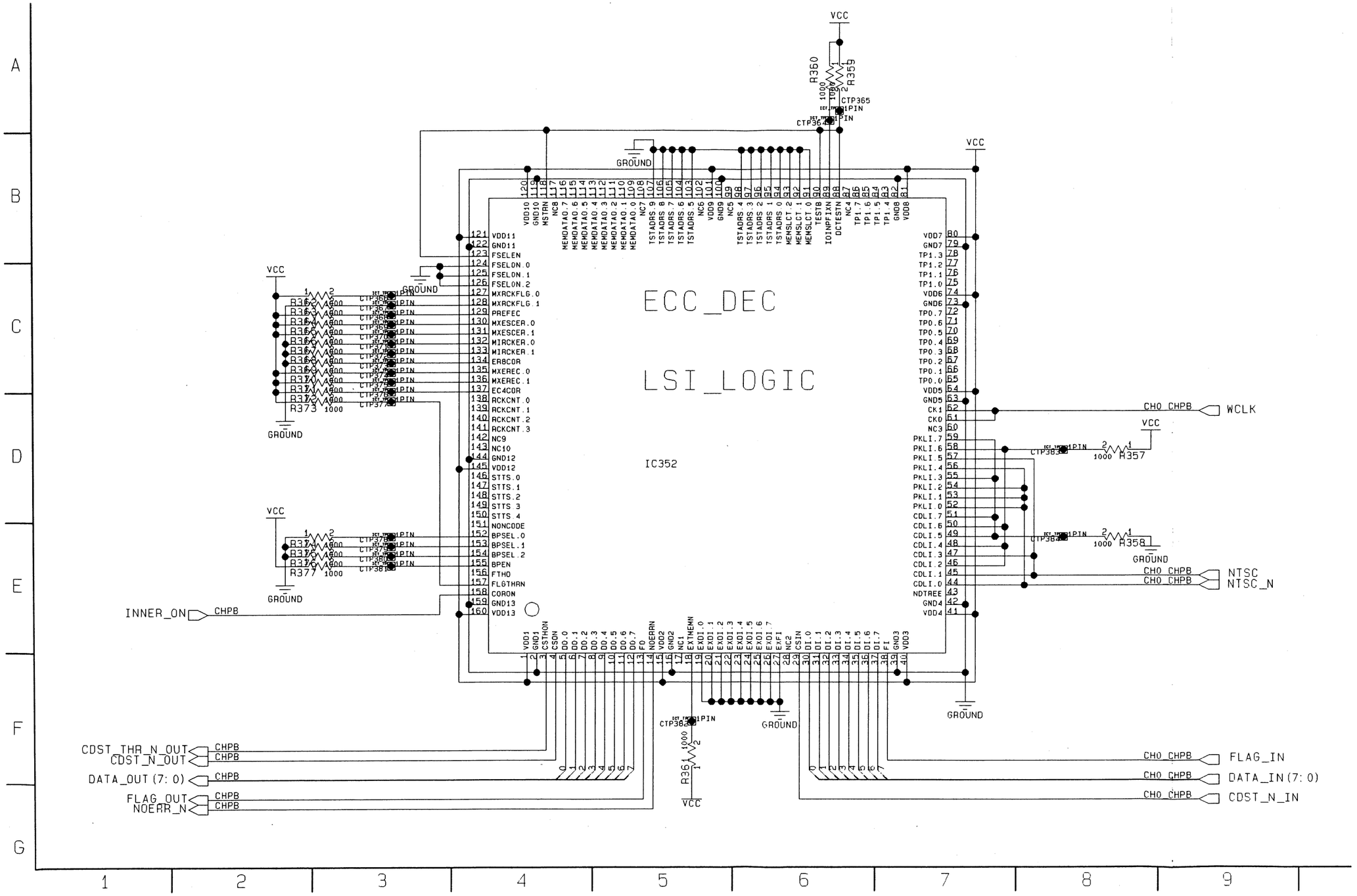

REVERSE SIDE

AV DSP (M 6/46, 7/46)

AV DSP (M 9/46) PB/CH1 IECC DECODER SCHEMATIC DIAGRAM

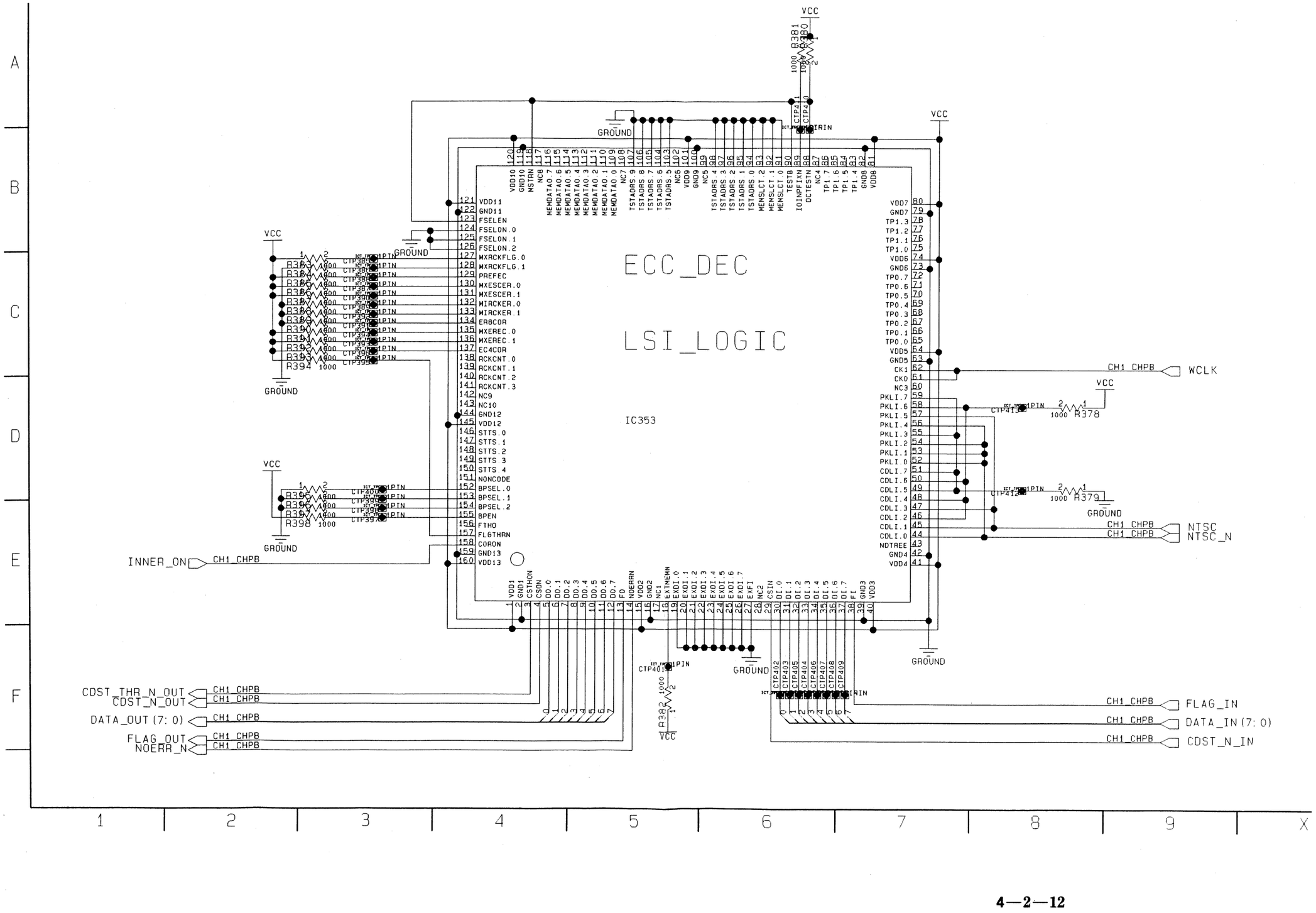

AV DSP (M 10/46) AUDIO PROCESS (OVERALL) SCHEMATIC DIAGRAM

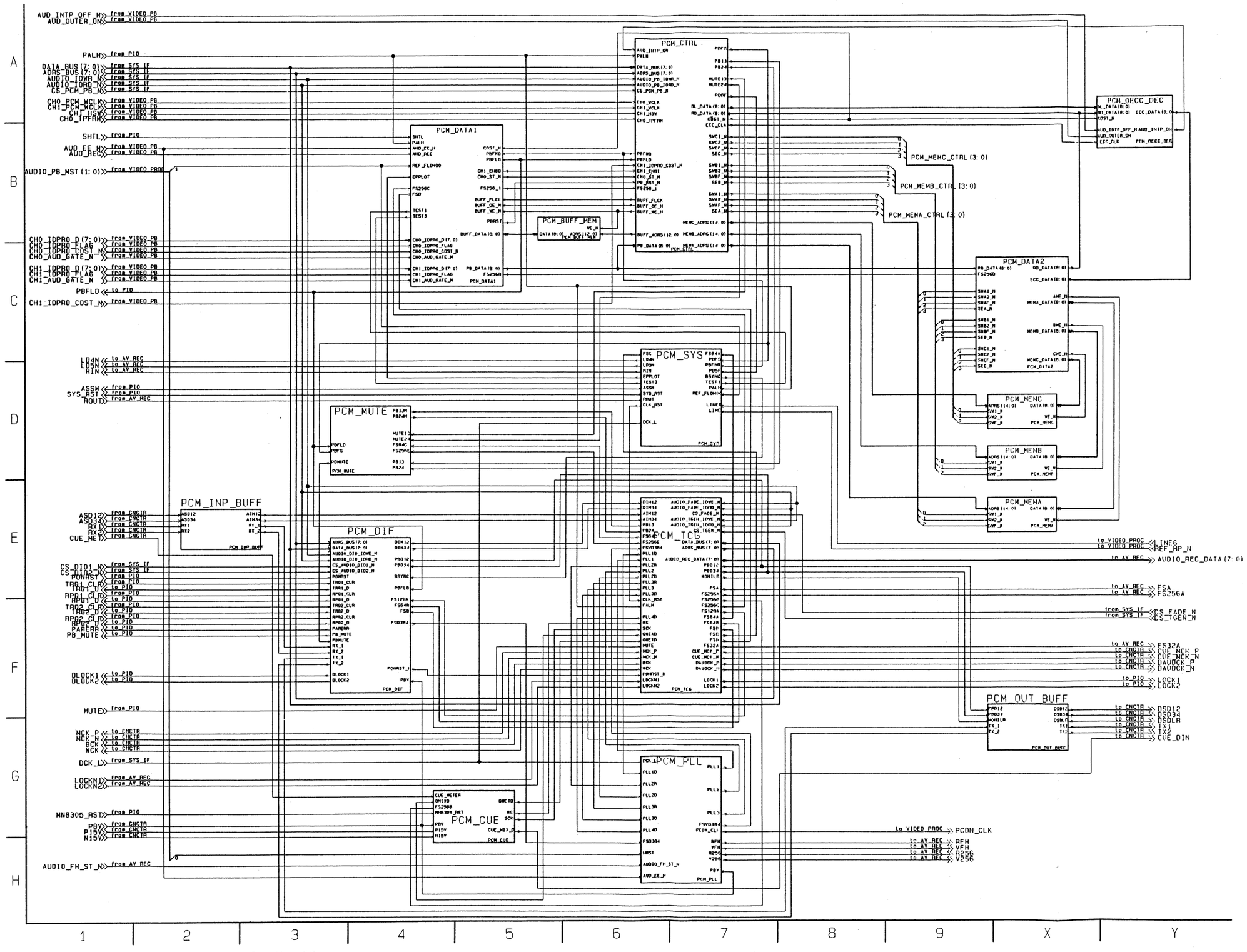

AV DSP (M 11/46) AUDIO PROCESS/PCM INPUT BUFFER SCHEMATIC DIAGRAM

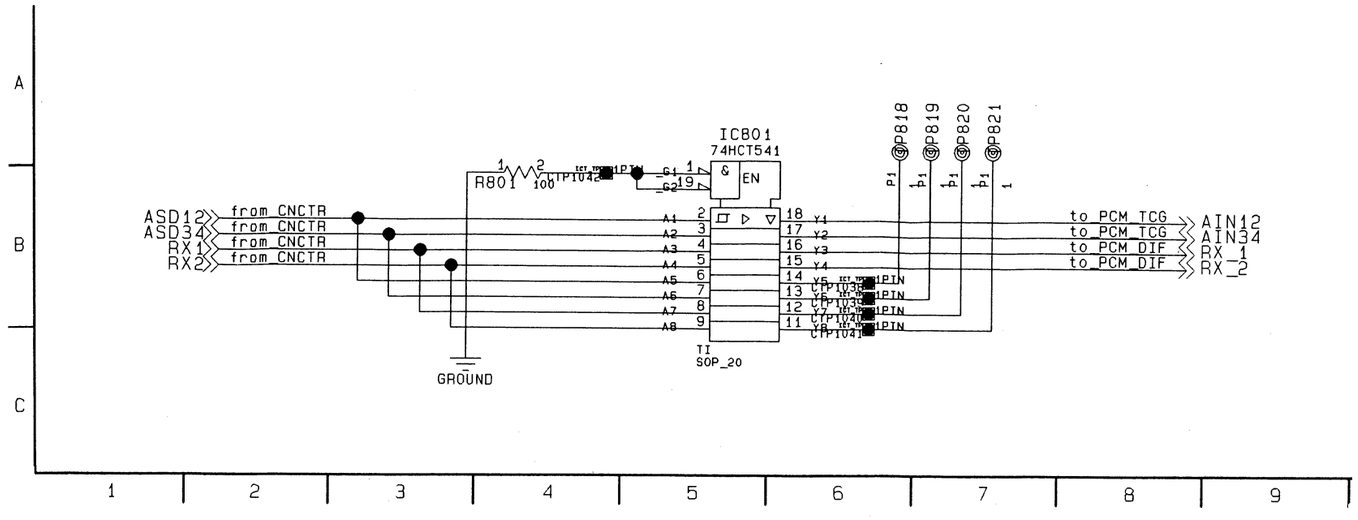

AV DSP (M 12/46) AUDIO PROCESS/PCM DIF SCHEMATIC DIAGRAM

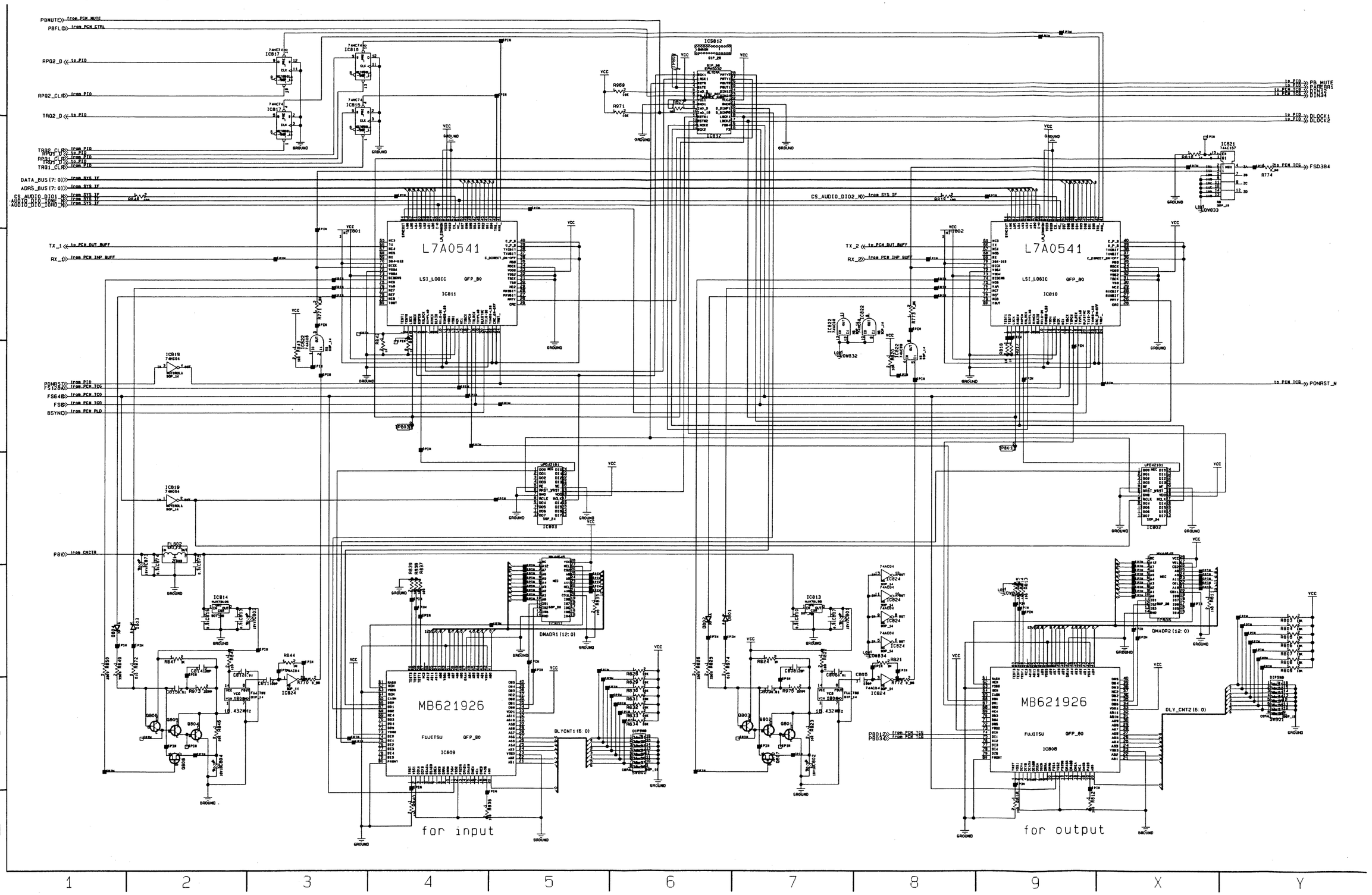

AV DSP (M 13/46) AUDIO PROCESS/PCM MUTE SCHEDMATIC DIAGRAM

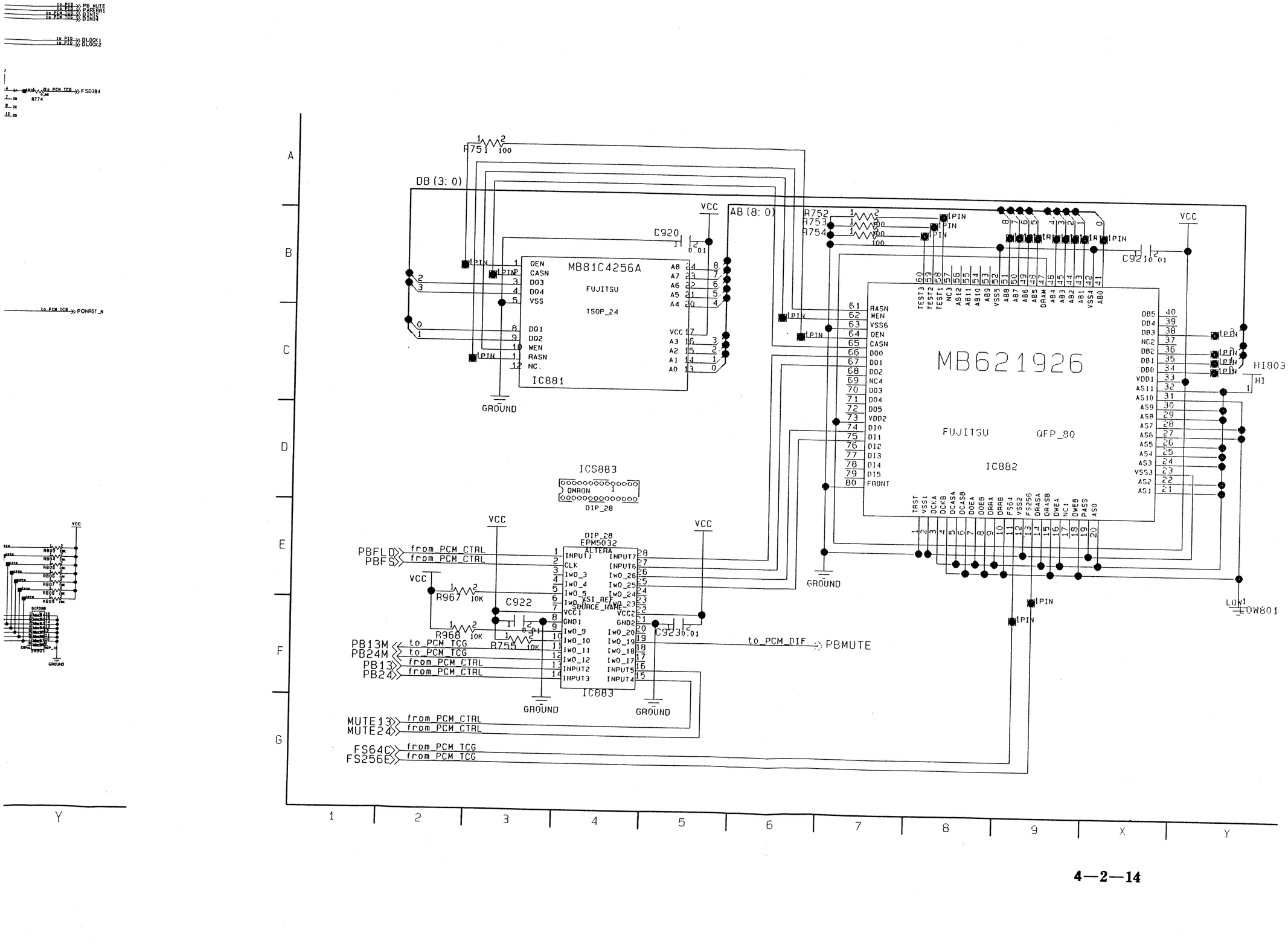

AV DSP (M 14/46) AUDIO PROCESS/PCM TCG SCHEMATIC DIAGRAM

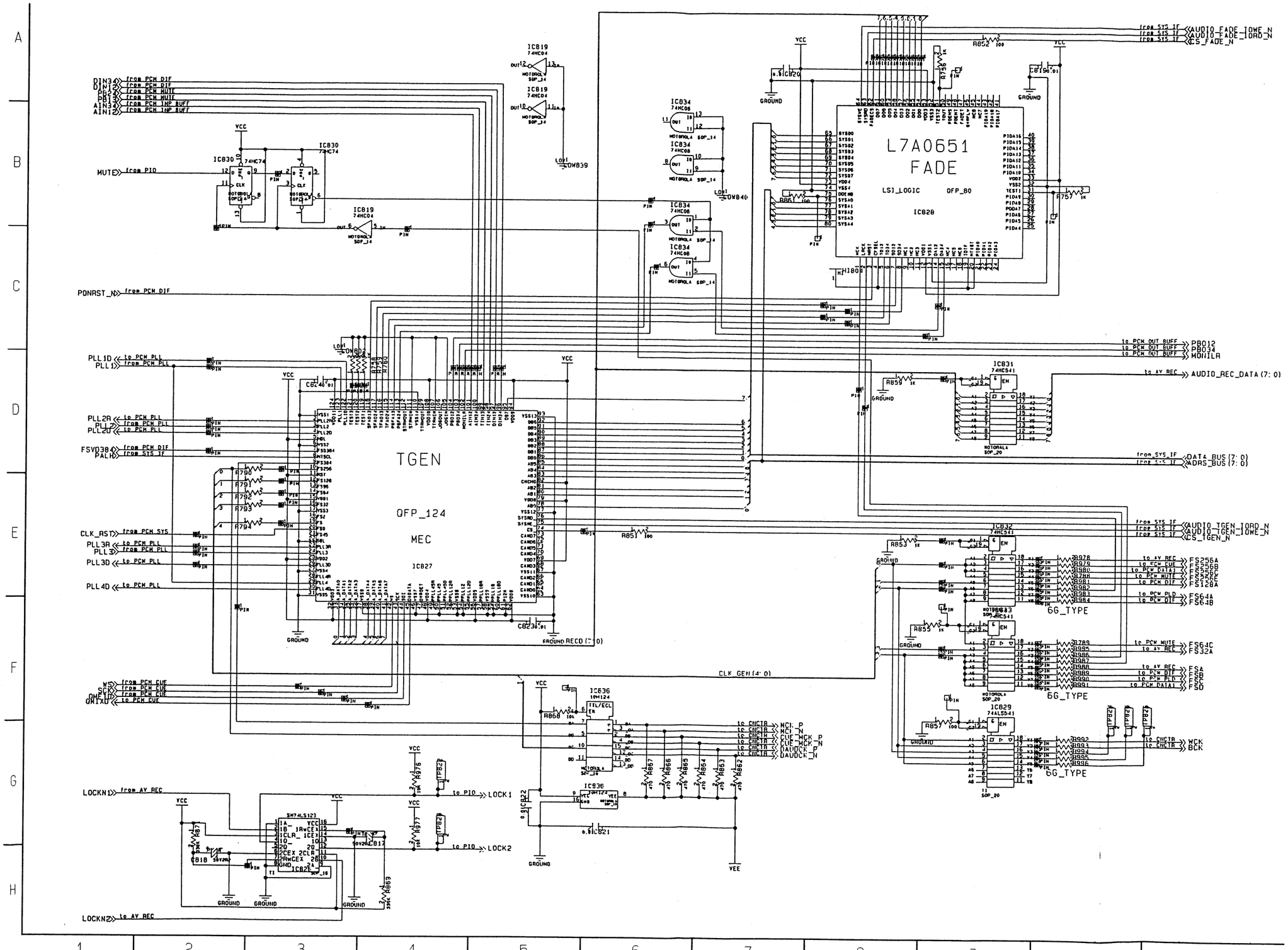

AV DSP (M 15/46) AUDIO PROCESS/PCM PLL SCHEMATIC DIAGRAM

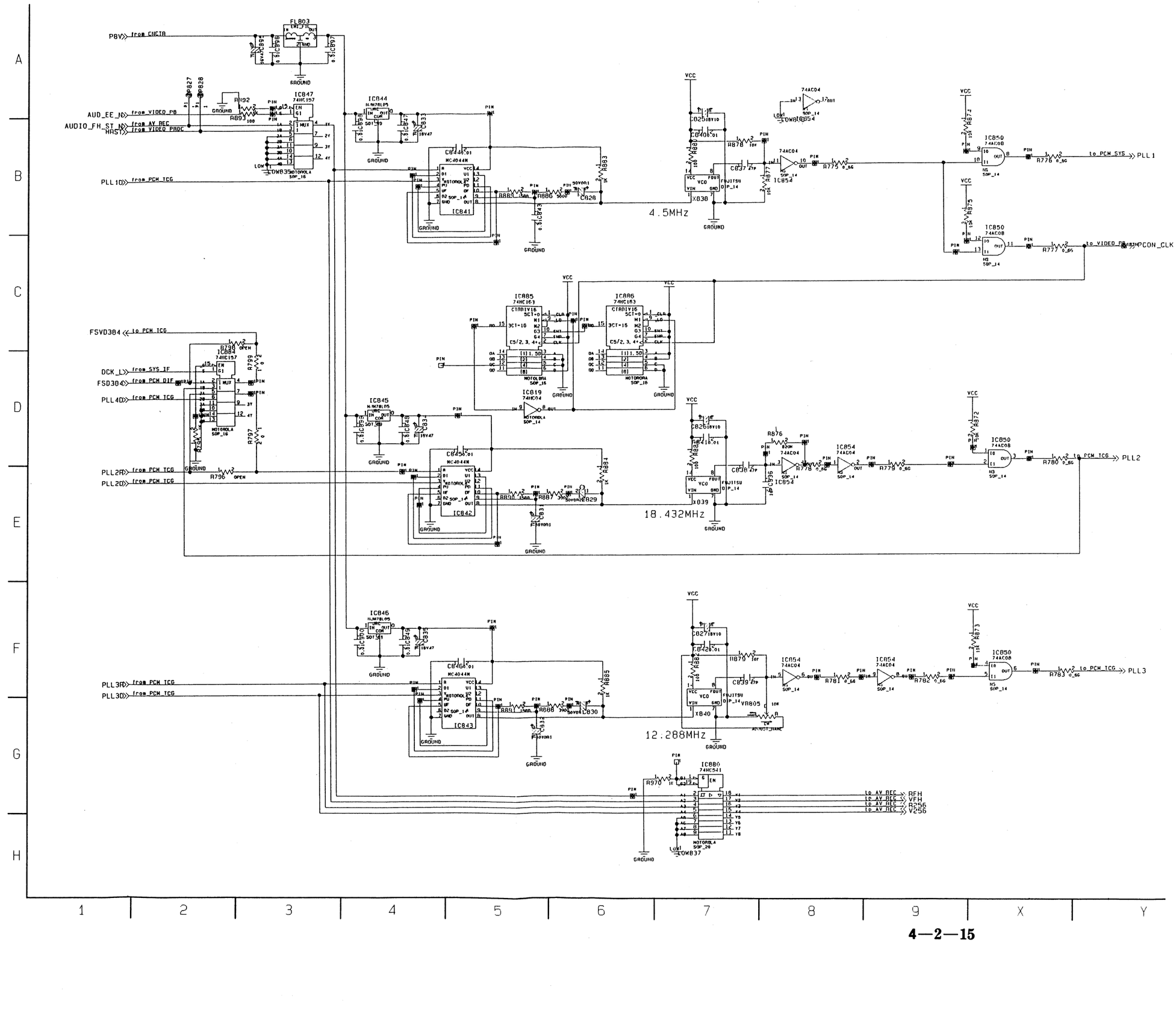

AV DSP (M 16/46) AUDIO PROCESS/PCM SYS SCHEMATIC DIAGRAM

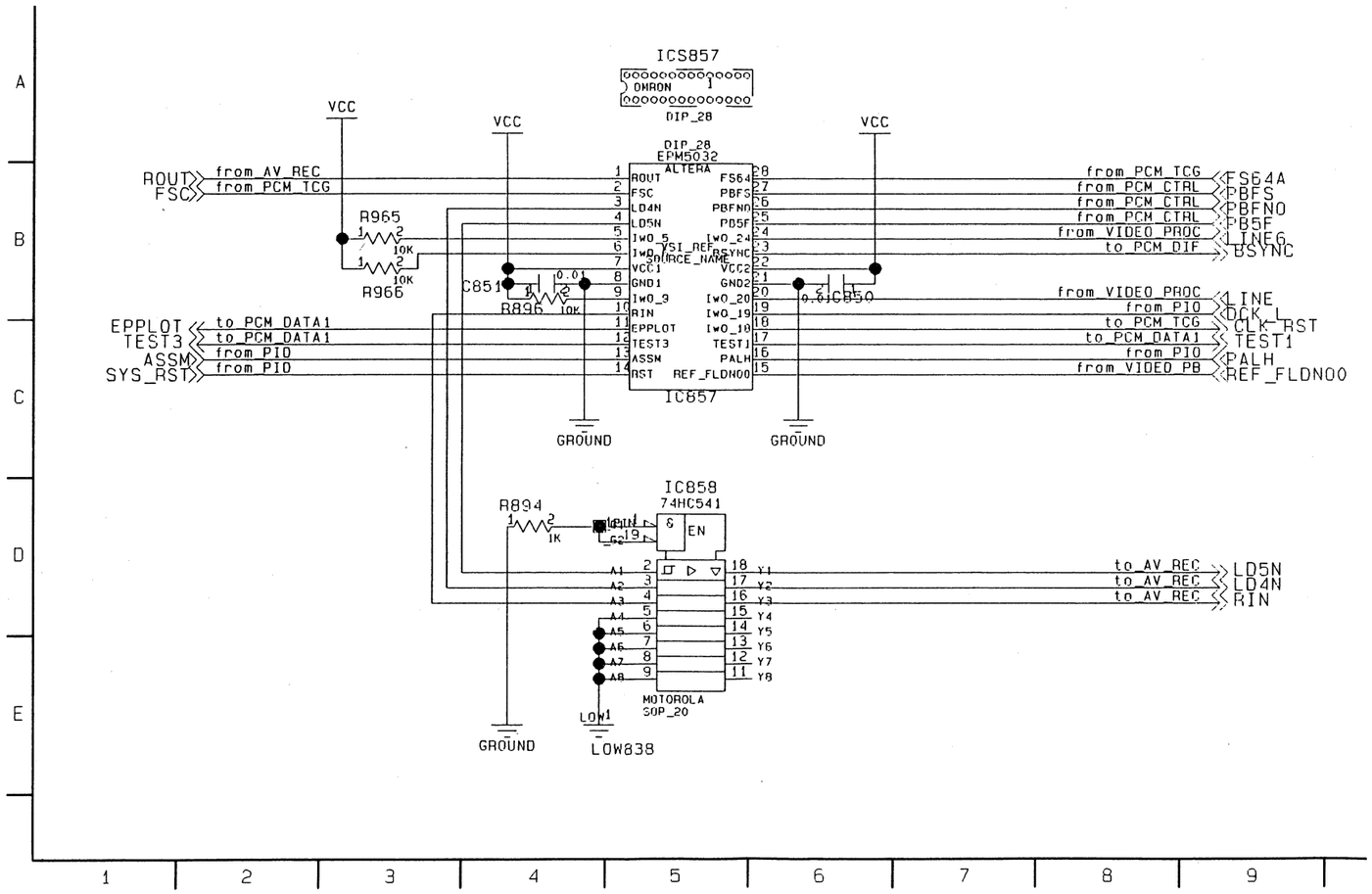

REVERSE SIDE

AV DSP (M 14/46, 15/46)

AV DSP (M 17/46) AUDIO PROCESS/PCM DATA 1 SCHEMATIC DIAGRAM

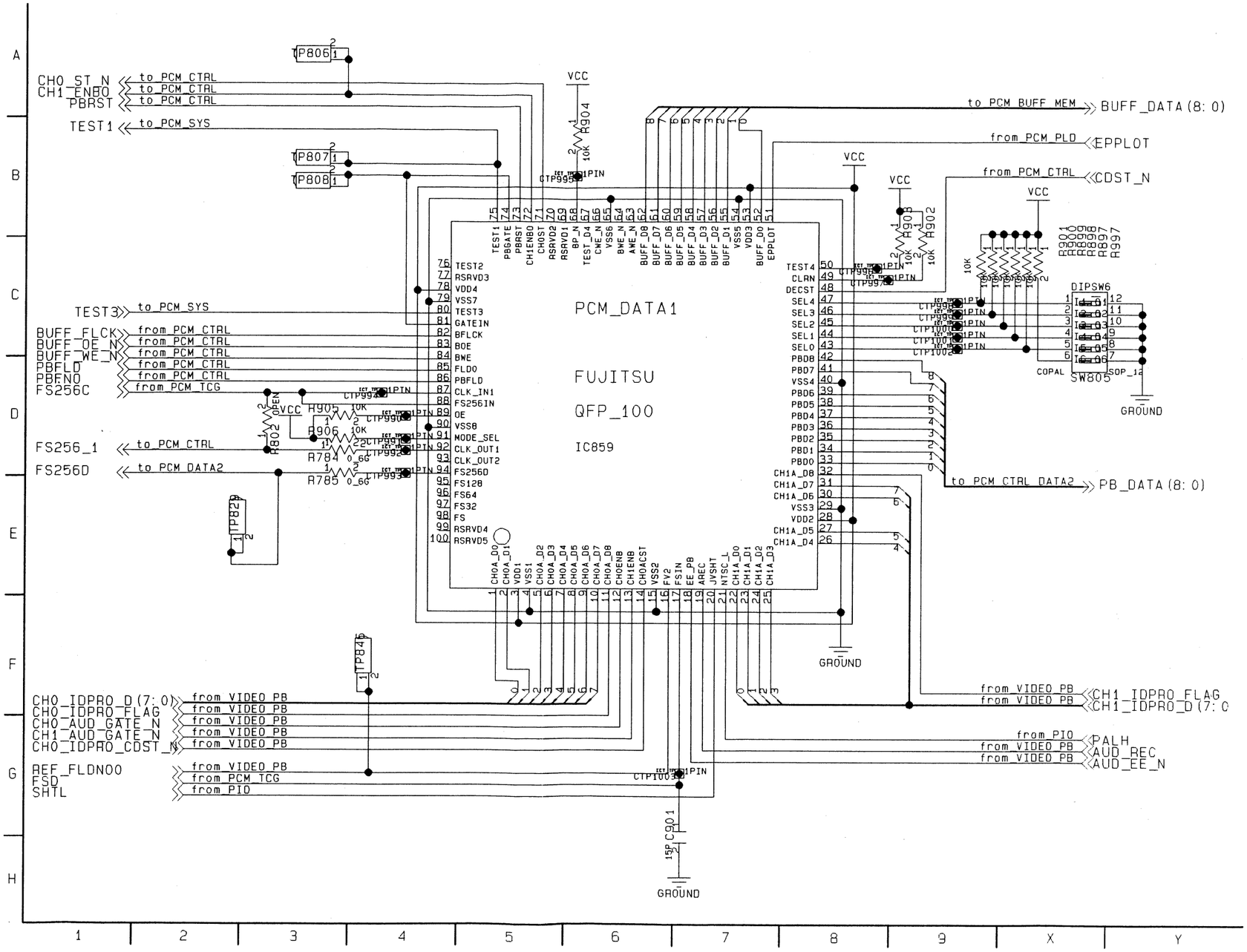

AV DSP (M 18/46) AUDIO PROCESS/PCM CONTROL SCHEMATIC DIAGRAM

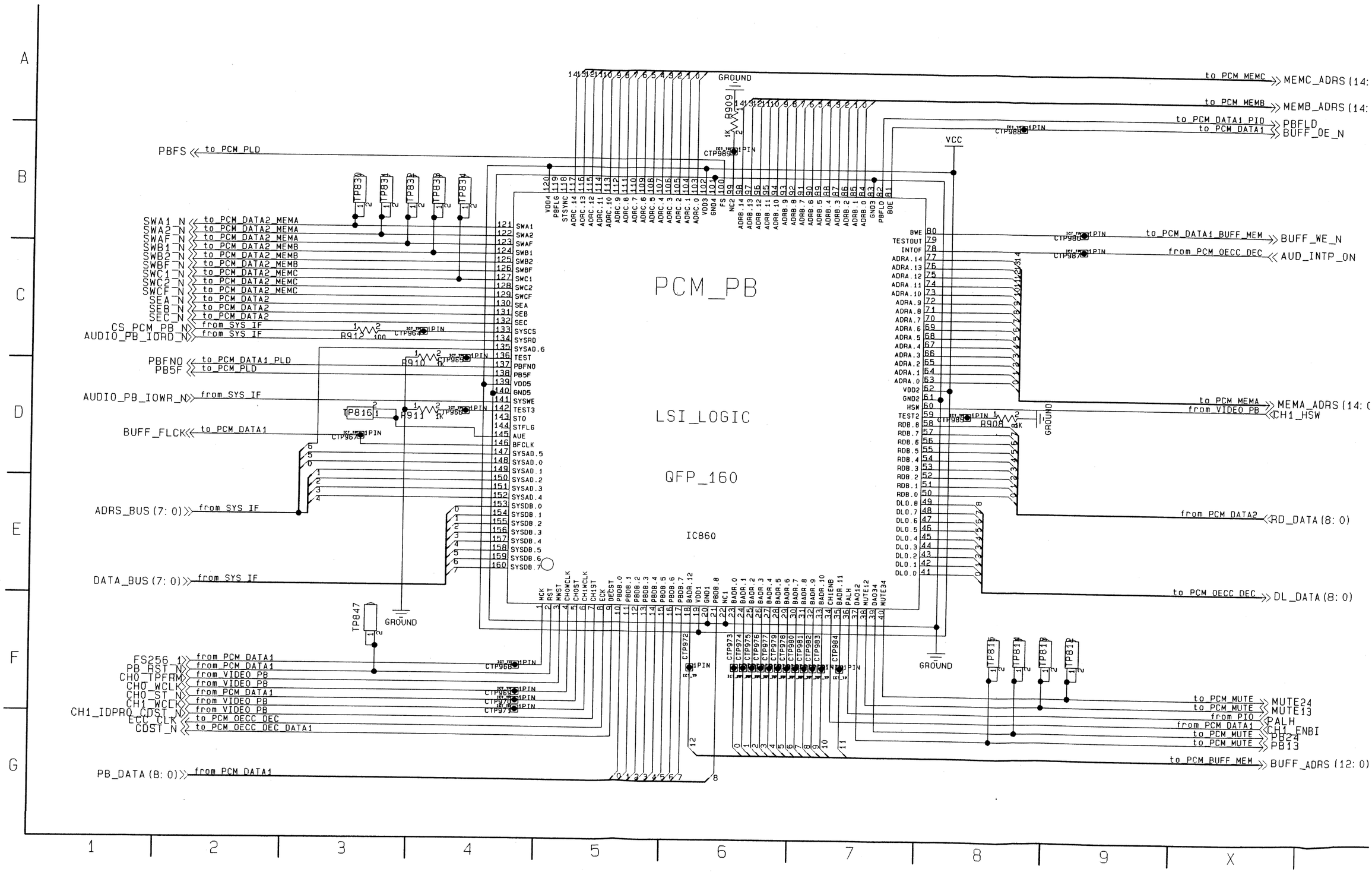

AV DSP (M 19/46) AUDIO PROCESS/PCM BUFF MEMORY SCHEDMATIC DIAGRAM

to PCM MEMC >> MEMC_ADRS (14: 0)

to PCM MEMB >> MEMB_ADRS (14: 0)

PCM DATA1 PIO >> PBFLD
to PCM DATA1 >> BUFF_OE_N

DATA1_BUFF_MEM >> BUFF_WE_N

m_PCM_OECC_DEC << AUD_INTP_ON

to PCM MEMA >> MEMA_ADRS (14: 0)
from VIDEO PB << CH1_HSW

from PCM DATA2 << RD_DATA (8: 0)

o_PCM_OECC_DEC >> DL_DATA (8: 0)

to PCM MUTE >> MUTE24
to PCM MUTE >> MUTE13
from PIO << PALH
from PCM DATA1 << CH1_ENBI
to PCM MUTE >> PB24
to PCM MUTE >> PB13

o_PCM_BUFF_MEM >> BUFF_ADRS (12: 0)

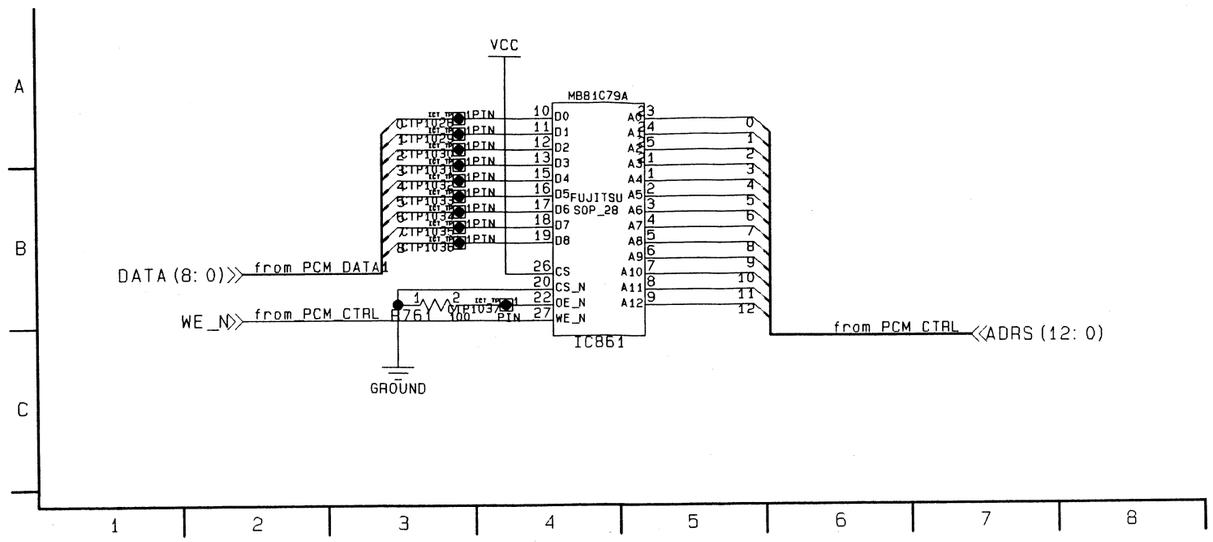

X | Y

AV DSP (M 20/46) AUDIO PROCESS/PCM DATA 2 SCHEMATIC DIAGRAM

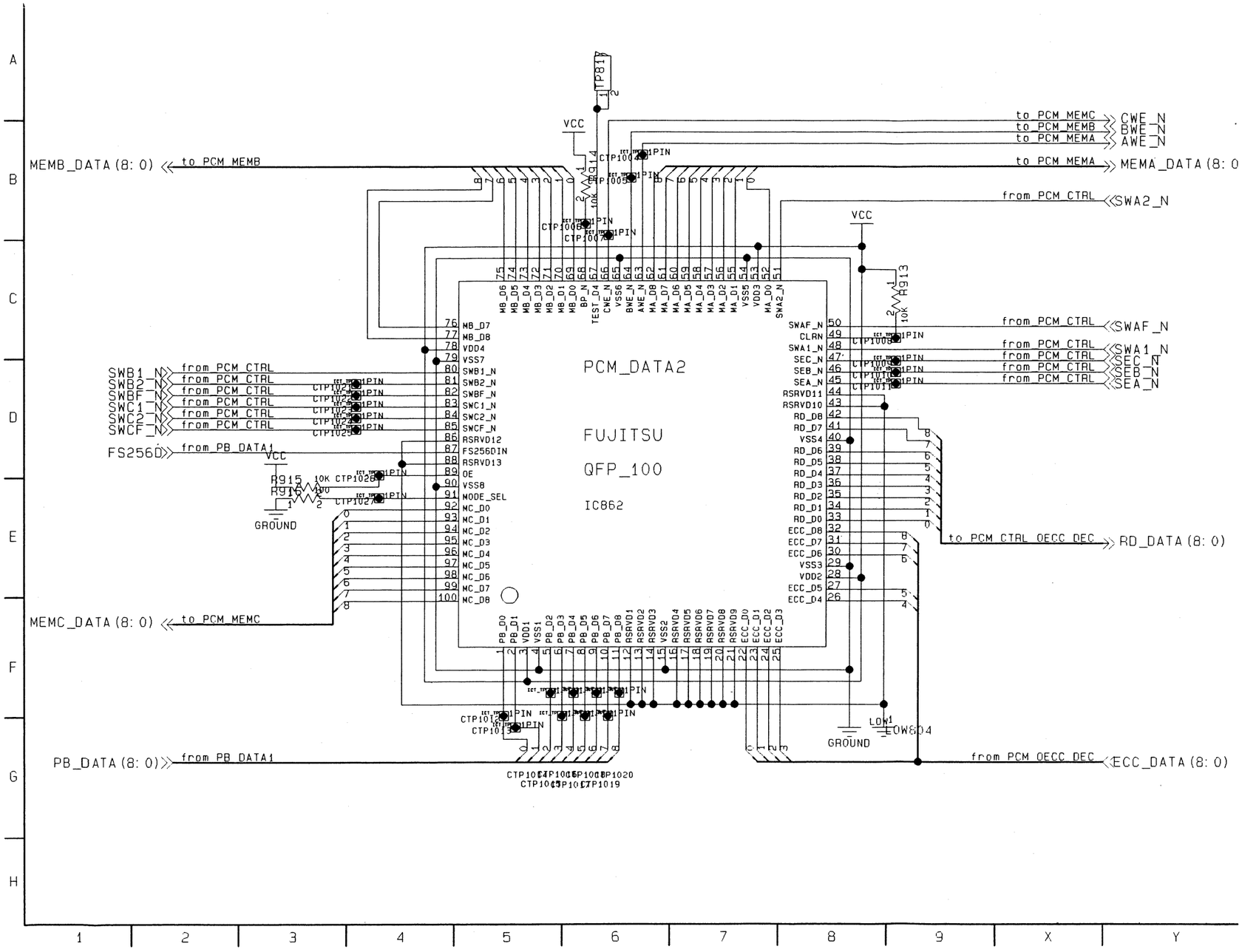

AV DSP (M 21/46) AUDIO PROCESS/PCM I

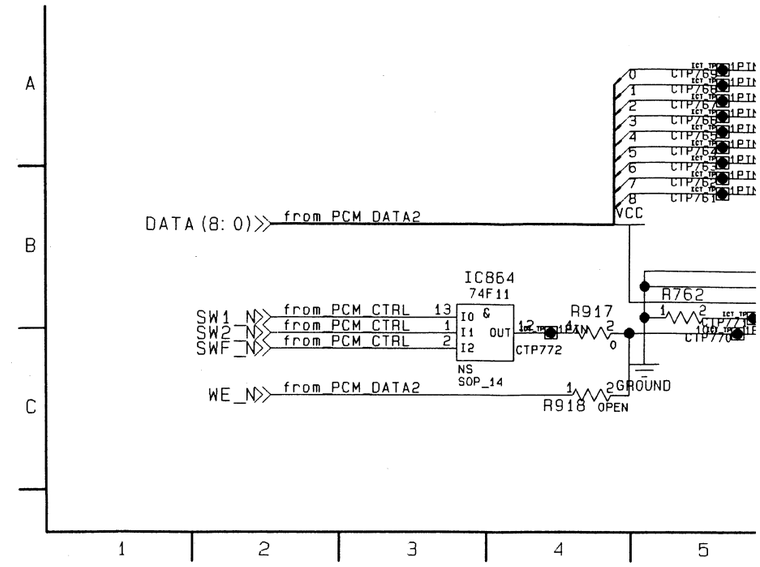

AV DSP (M 22/46) AUDIO PROCESS/PCM I

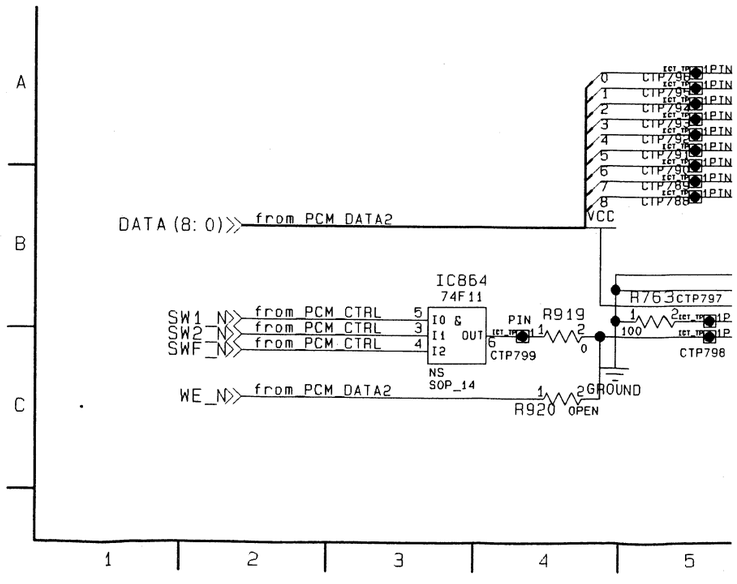

REVERSE SIDE

AV DSP (M 18/46, 19/46)

ɔ PROCESS/PCM MEMORY A SCHEMATIC DIAGRAM

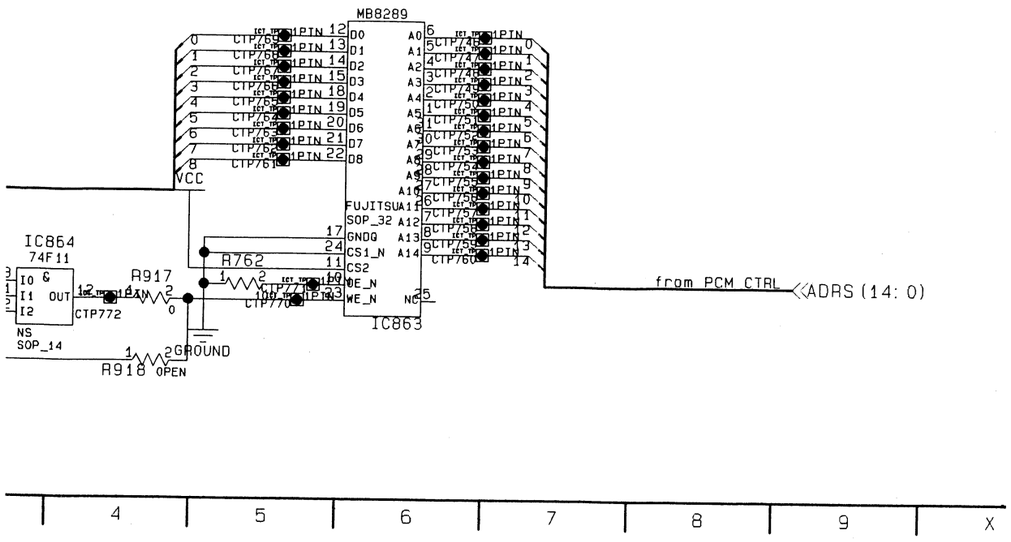

ɔ PROCESS/PCM MEMORY B SCHEMATIC DIAGRAM

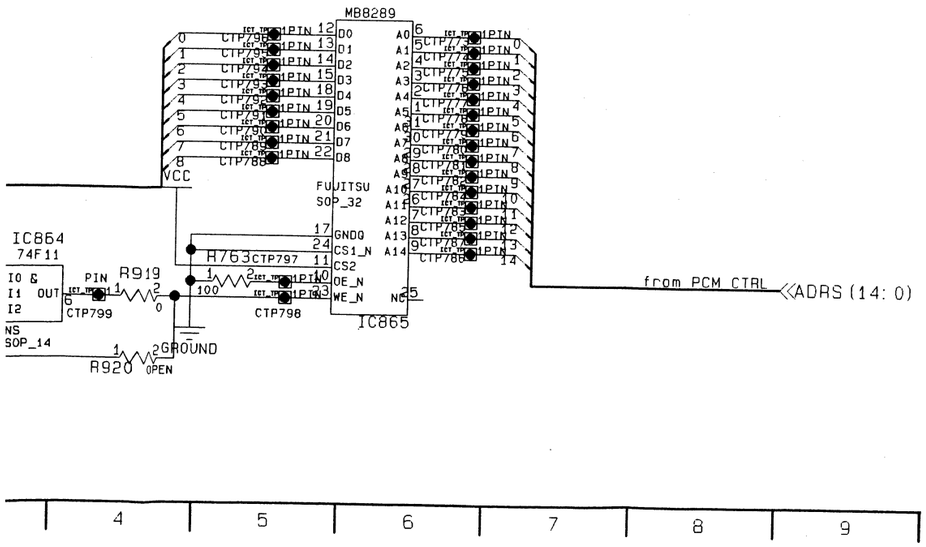

AV DSP (M 23/46) AUDIO PROCESS/PCM MEMORY C SCHEMATIC DIAGRAM

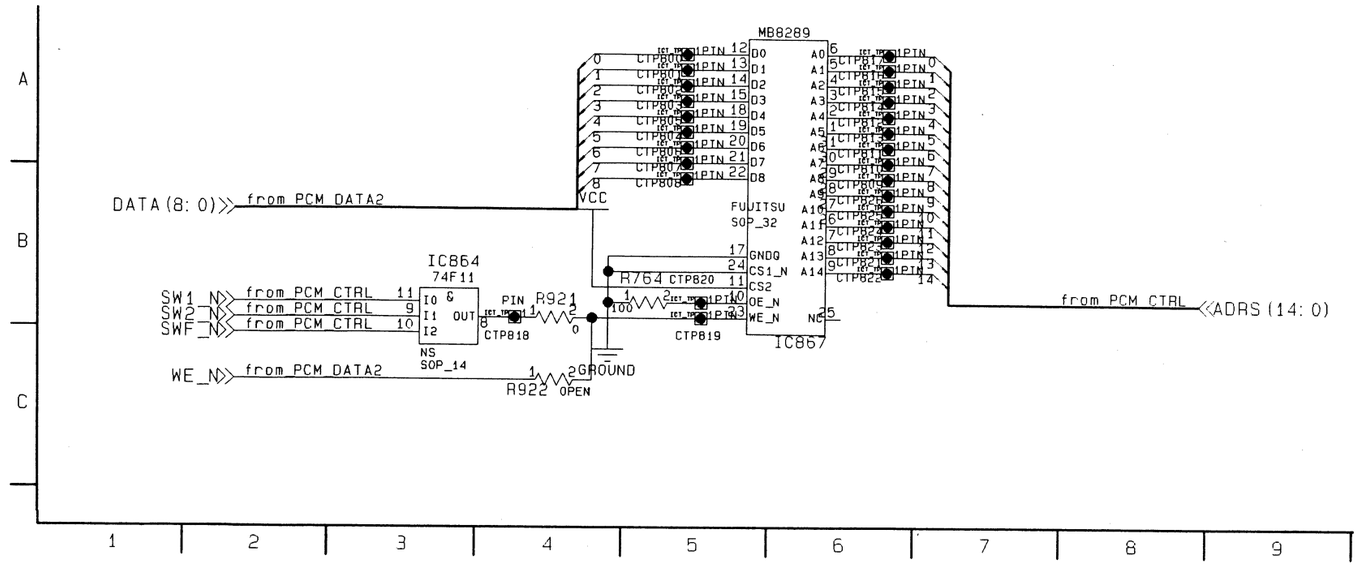

AV DSP (M 24/46) AUDIO PROCESS/PCM OECC DECODER SCHEMATIC DIAGRAM

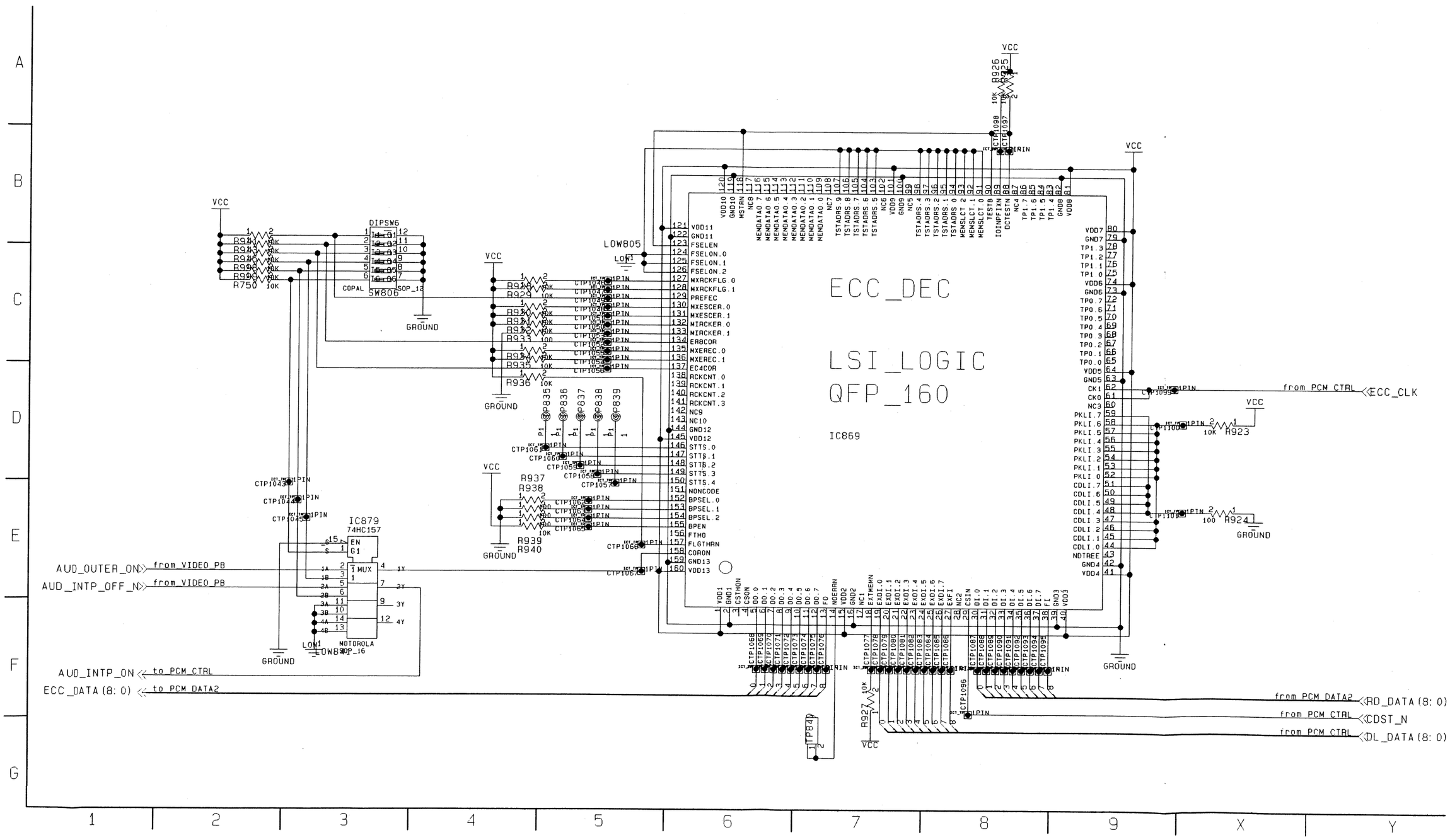

AV DSP (M 25/46) AUDIO PROCESS/PCM CUE SCHEMATIC DIAGRAM

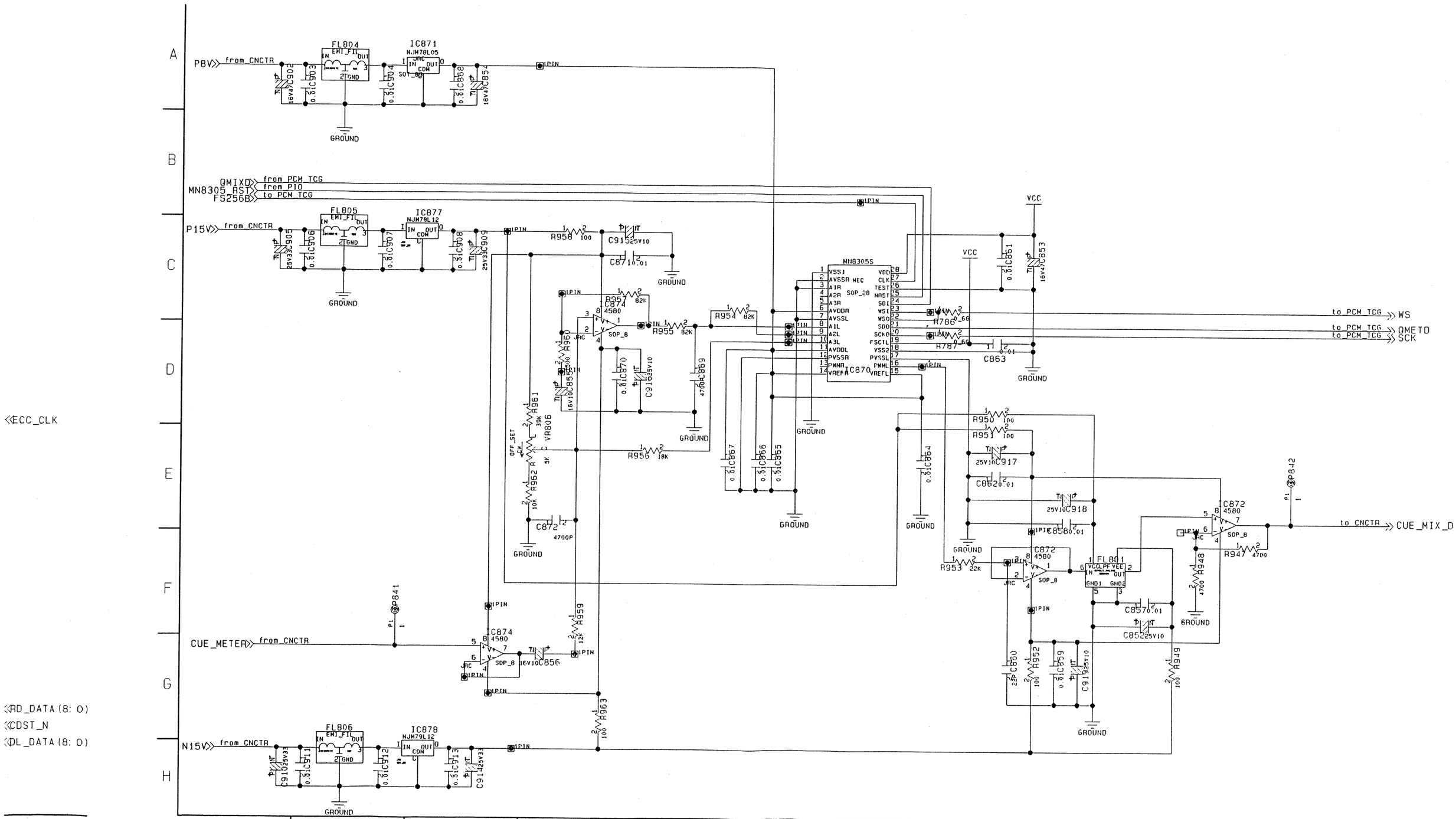

AV DSP (M 26/46) AUDIO PROCESS/PCM OUT BUFFER SCHEMATIC DIAGRAM

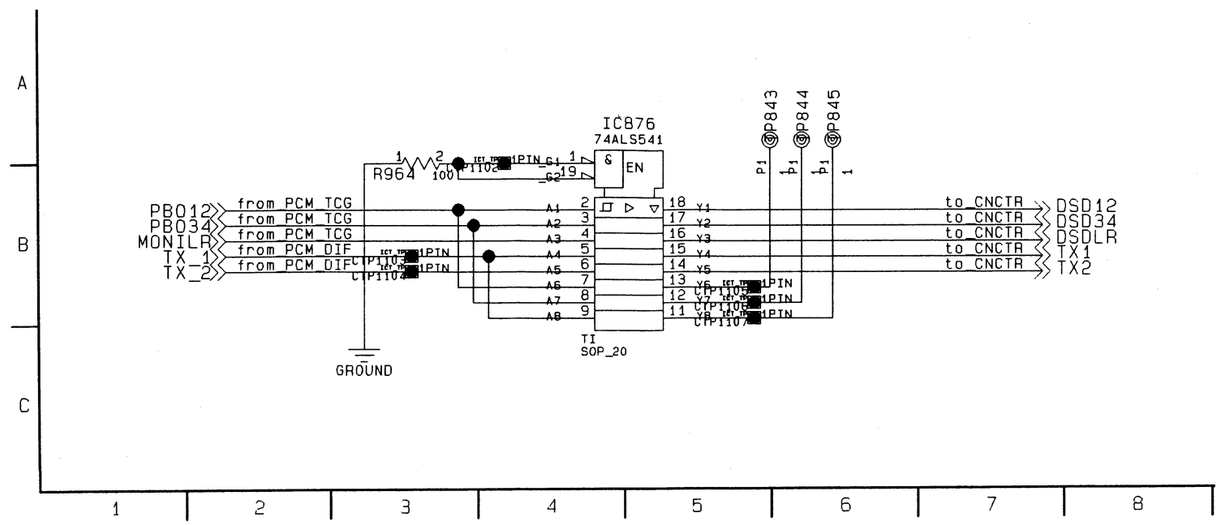

AV DSP (M 27/46) VIDEO PROCESS (OVERALL) SCHEMATIC DIAGRAM

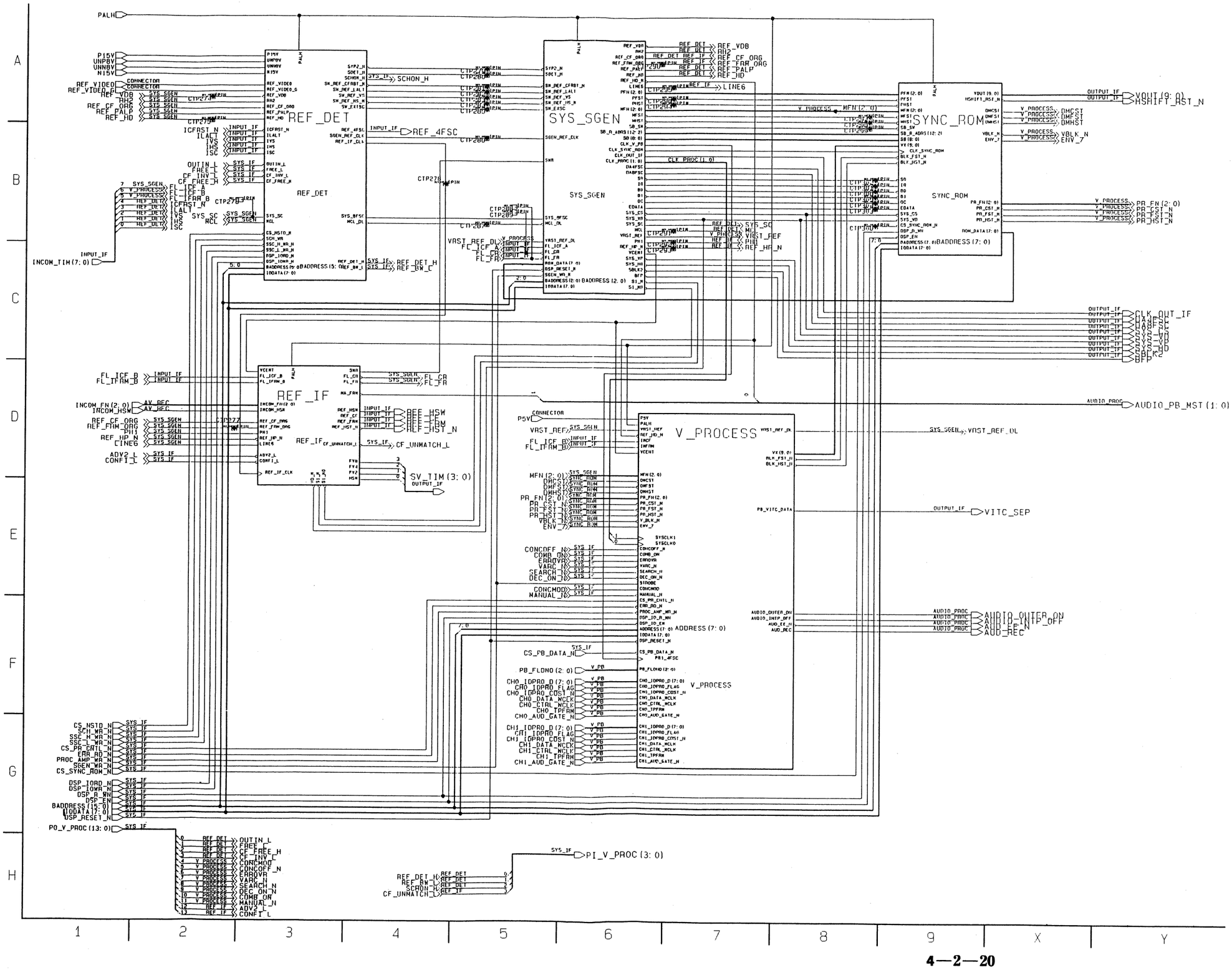

AV DSP (M 28/46) VIDEO PROCESS REF DETECTOR SCHEMATIC DIAGRAM

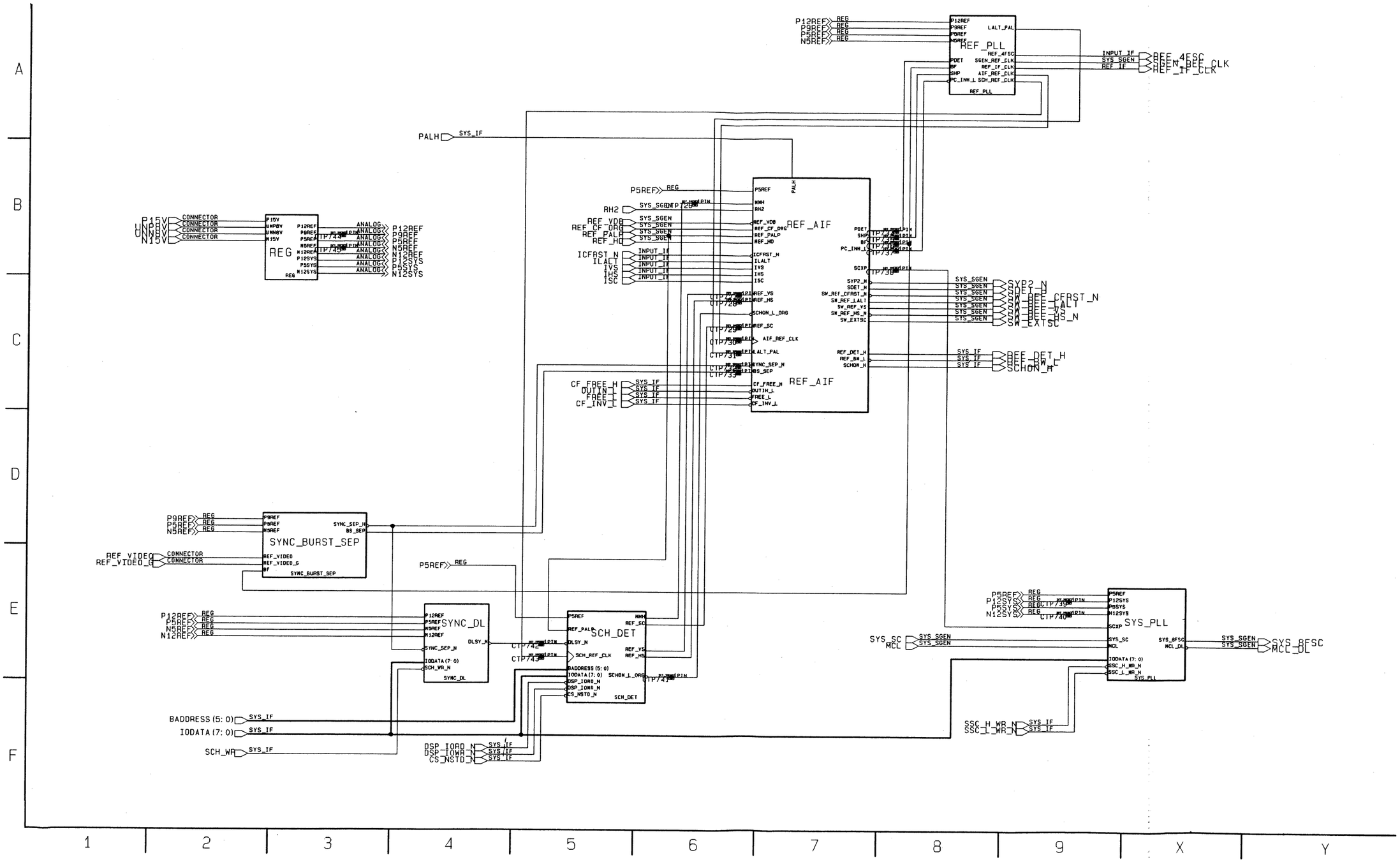

AV DSP (M 29/46) VIDEO PROCESS REF DETECTOR/REG SCHEMATIC DIAGRAM

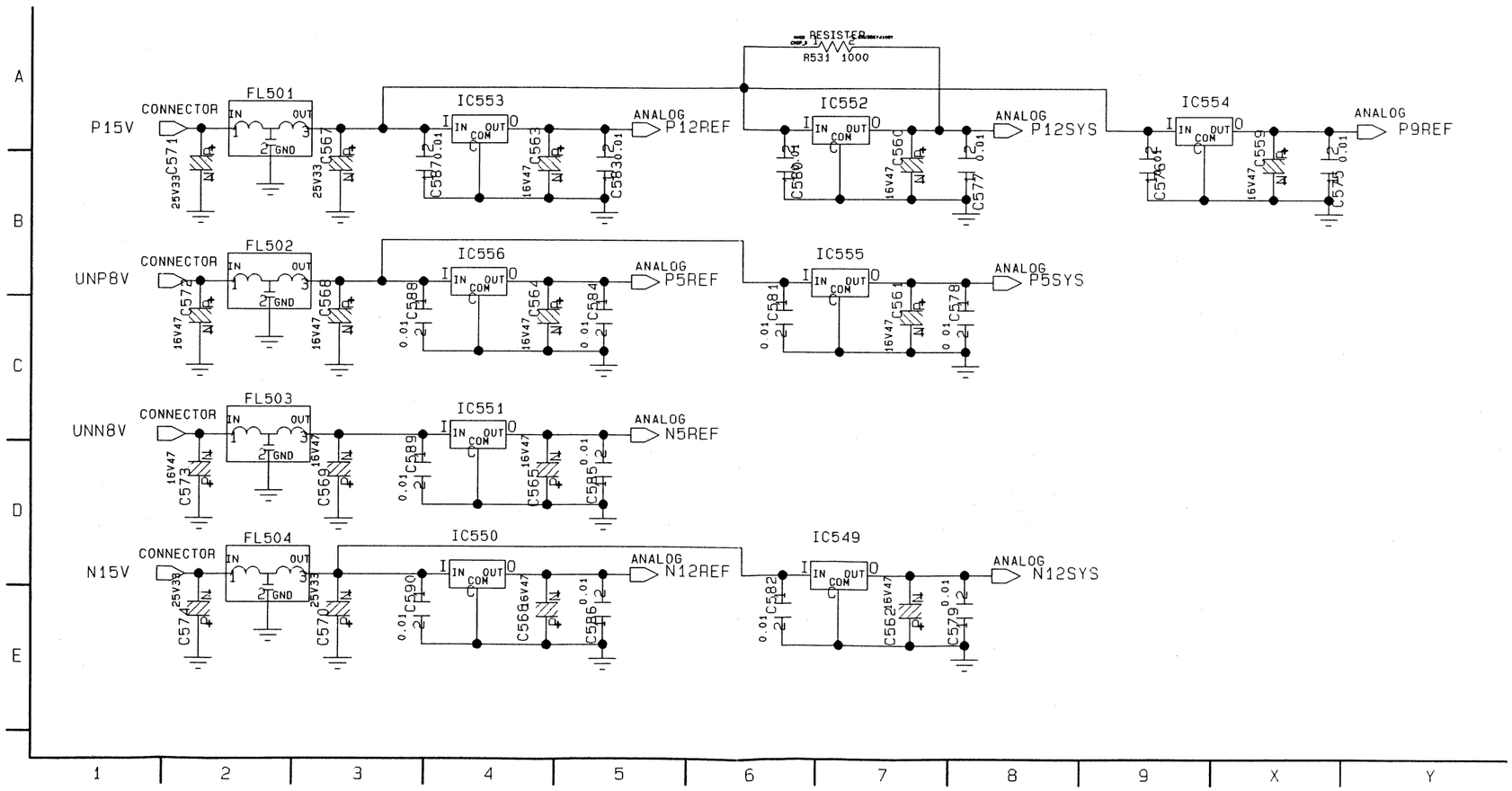

AV DSP (M 30/46) VIDEO PROCESS REF DETECTOR/SYNC BURST SEP SCHEMATIC DIAGRAM

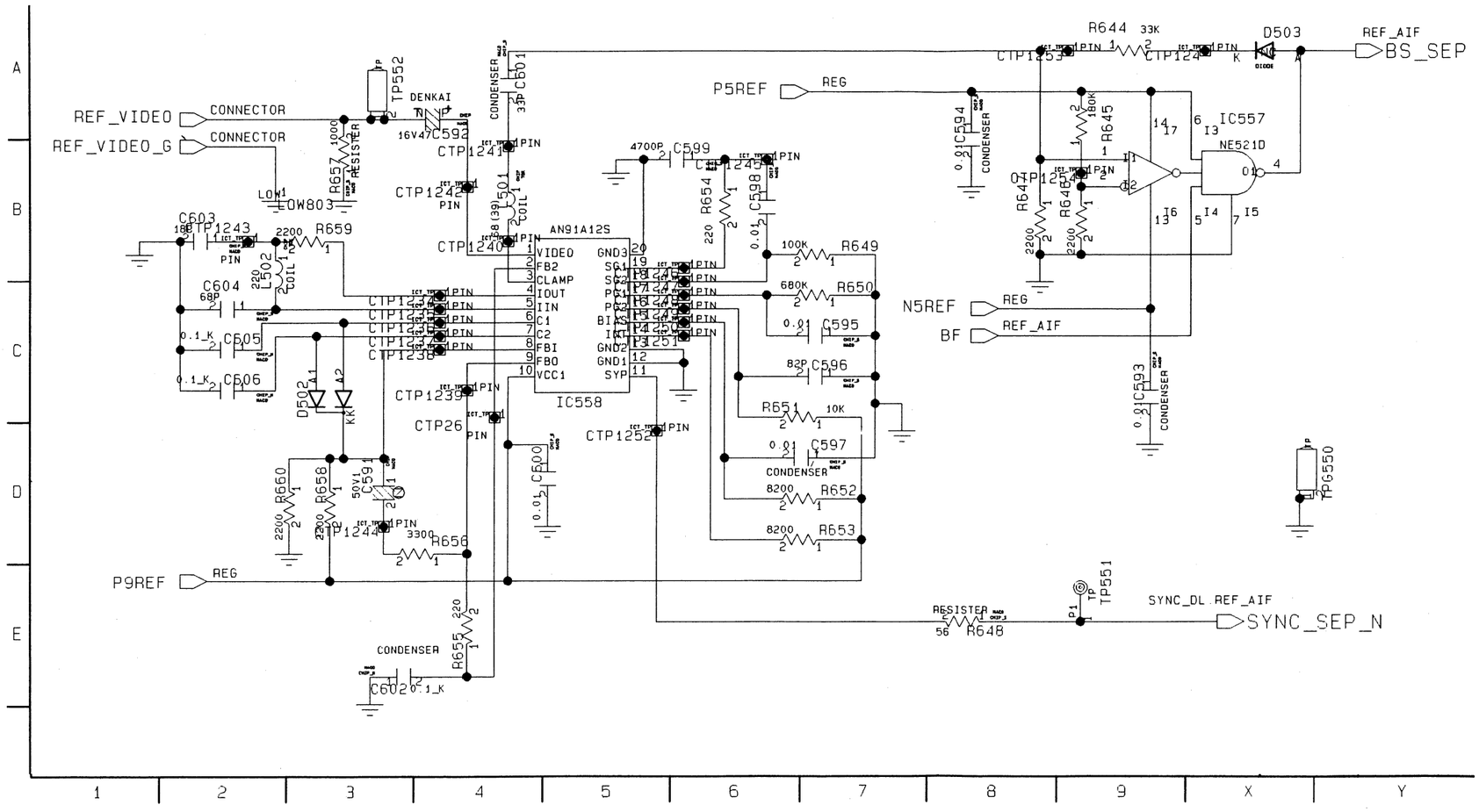

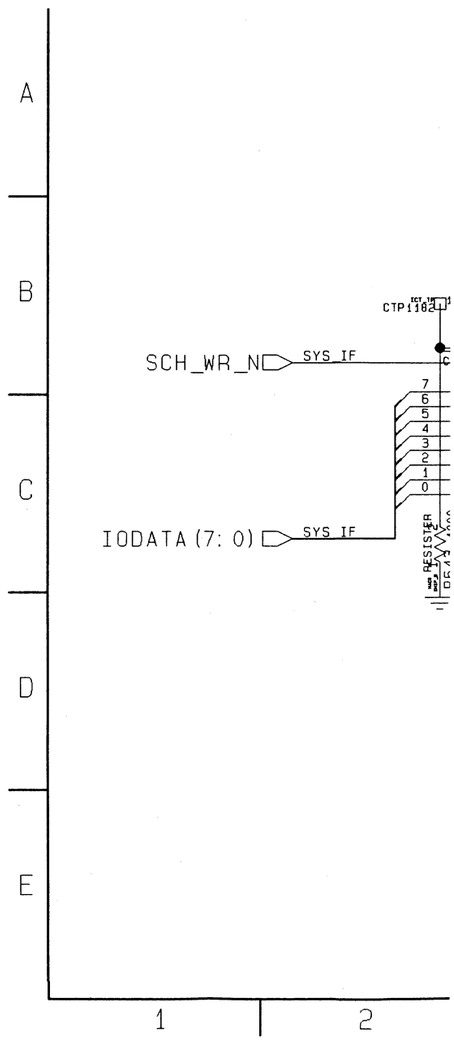

REVERSE SIDE

(M 31/46) VIDEO PROCESS REF DETECTOR/SYNC DELAY SCHEMATIC DIAGRAM

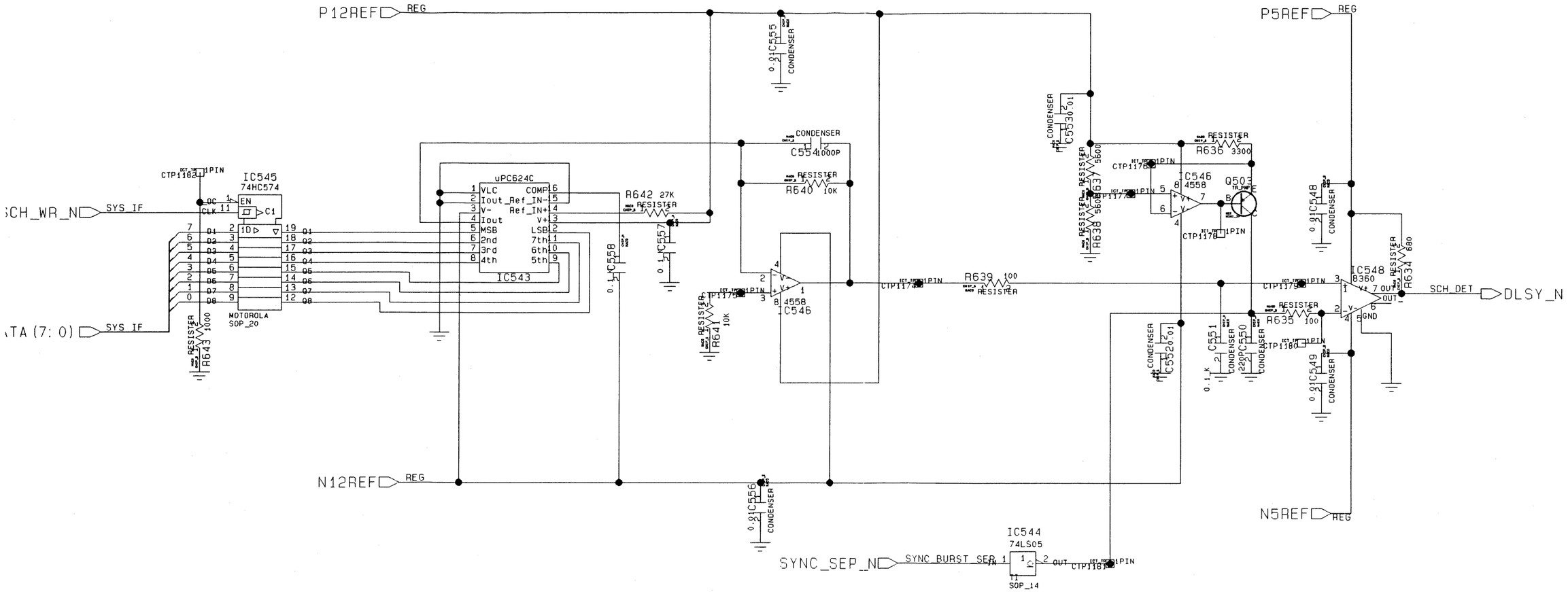

1 2 3 4 5 6 7 8 9 X Y

AV DSP (M 32/46) VIDEO PROCESS REF DETECTOR/SCH DETECTOR SCHEMATIC DIAGRAM

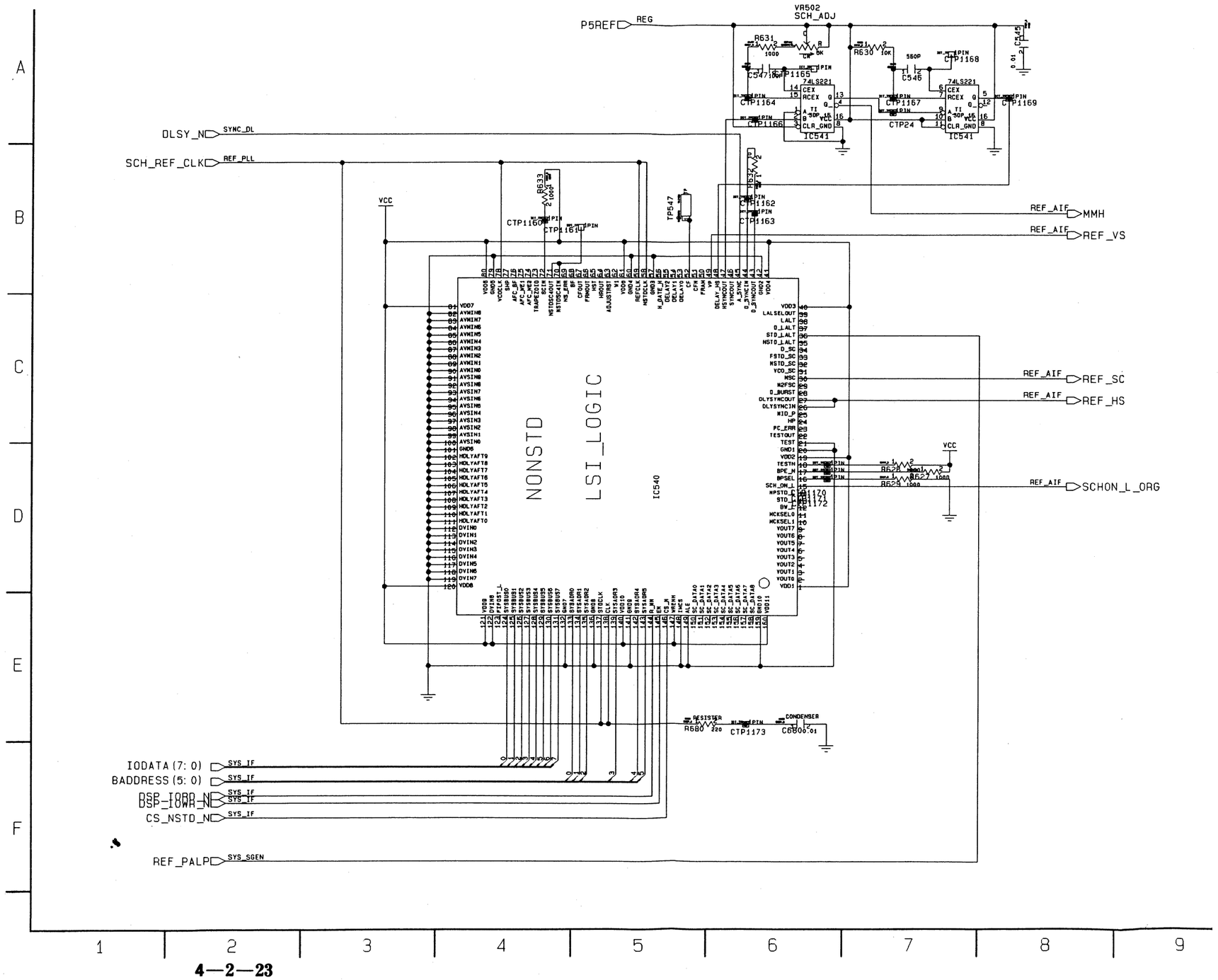

AV DSP (M 33/46) VIDEO PROCESS REF DETECTOR/REF AIF SCHEMATIC DIAGRAM

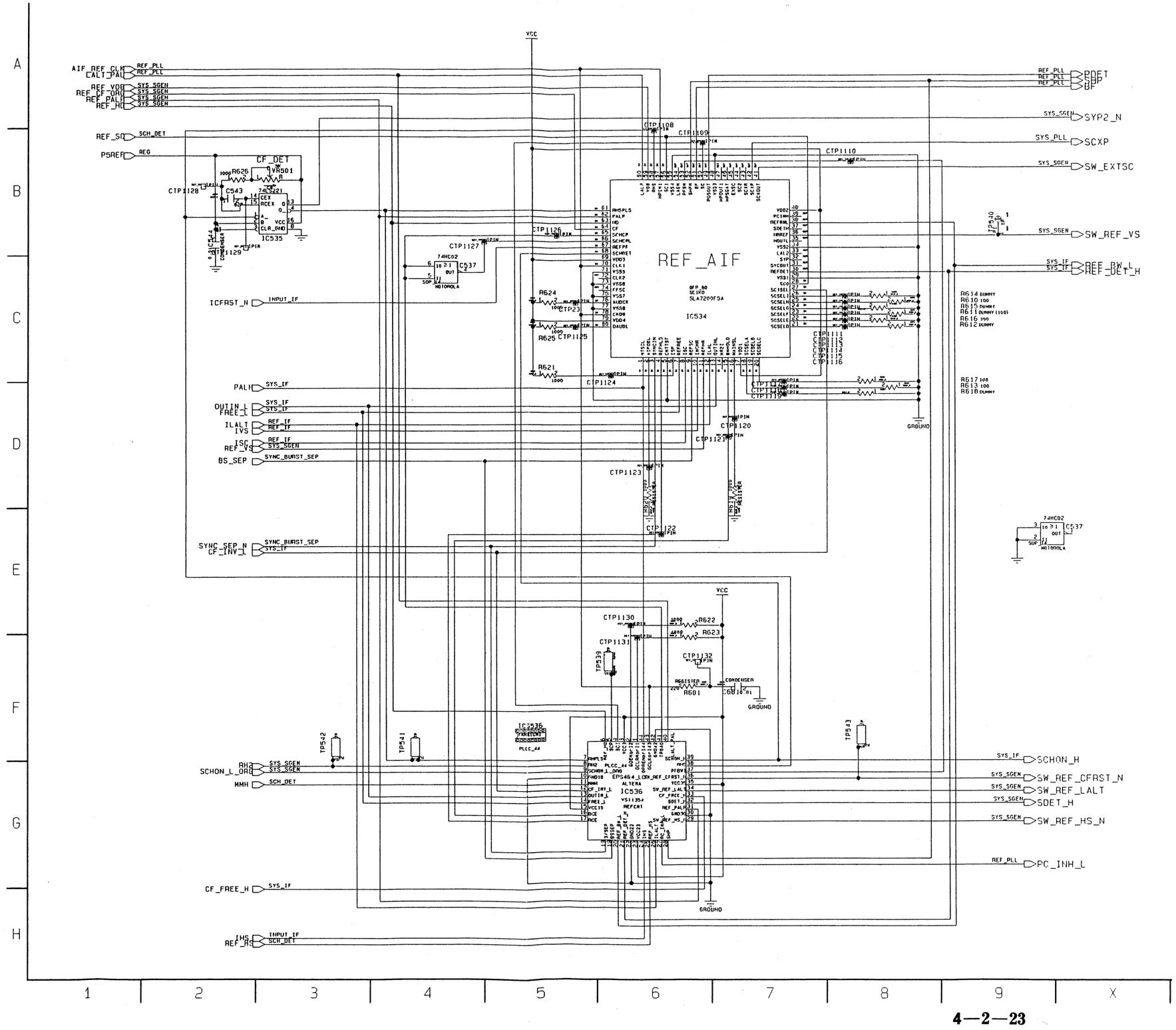

AV DSP (M 34/46) VIDEO PROCESS REF DETECTOR/REF PLL SCHEMATIC DIAGRAM

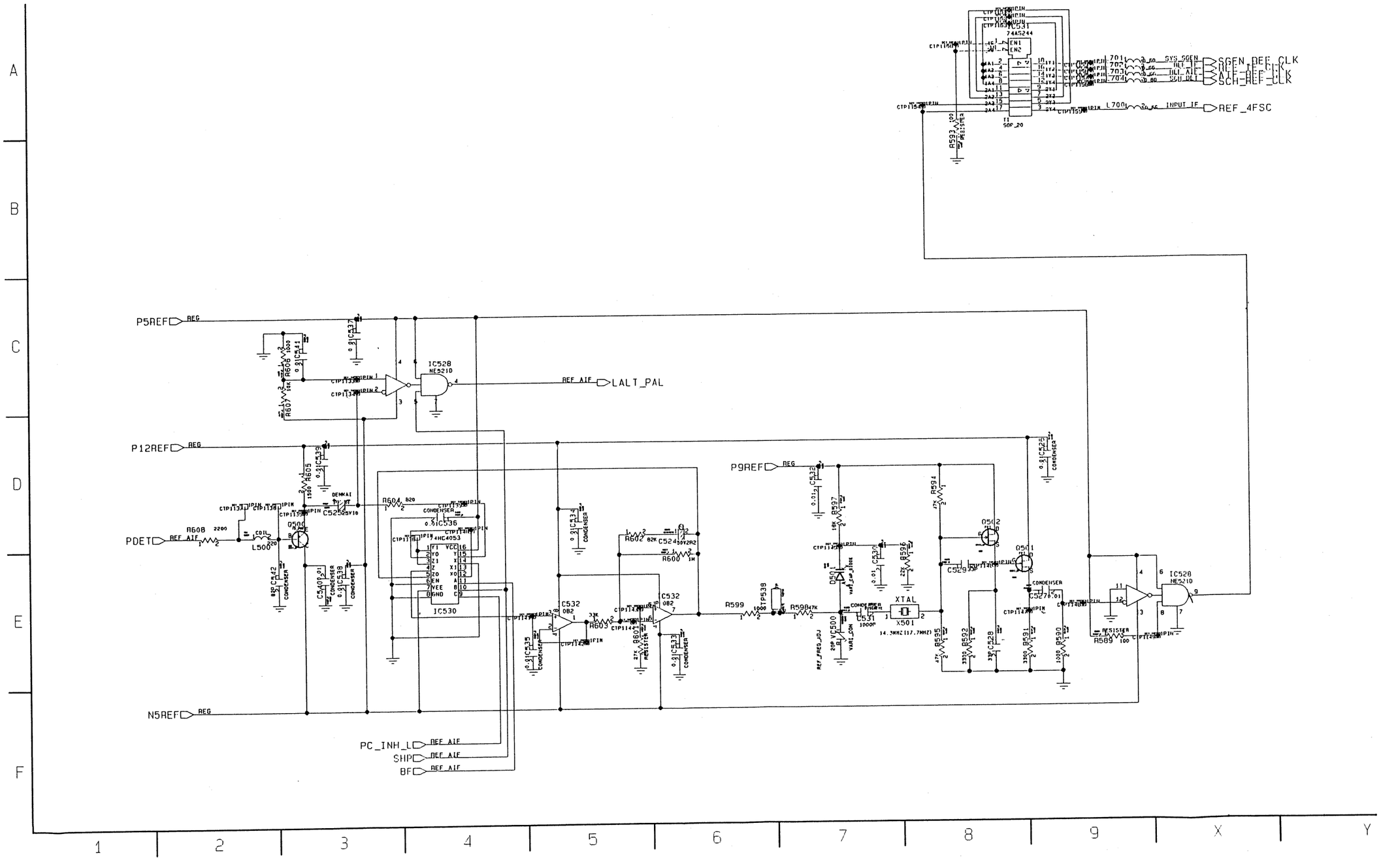

REVERSE SIDE

AV DSP (M 32/46, 33/46)

AV DSP (M 35/46) VIDEO PROCESS REF DETECTOR/SYSTEM PLL SCHEMATIC DIAGRAM

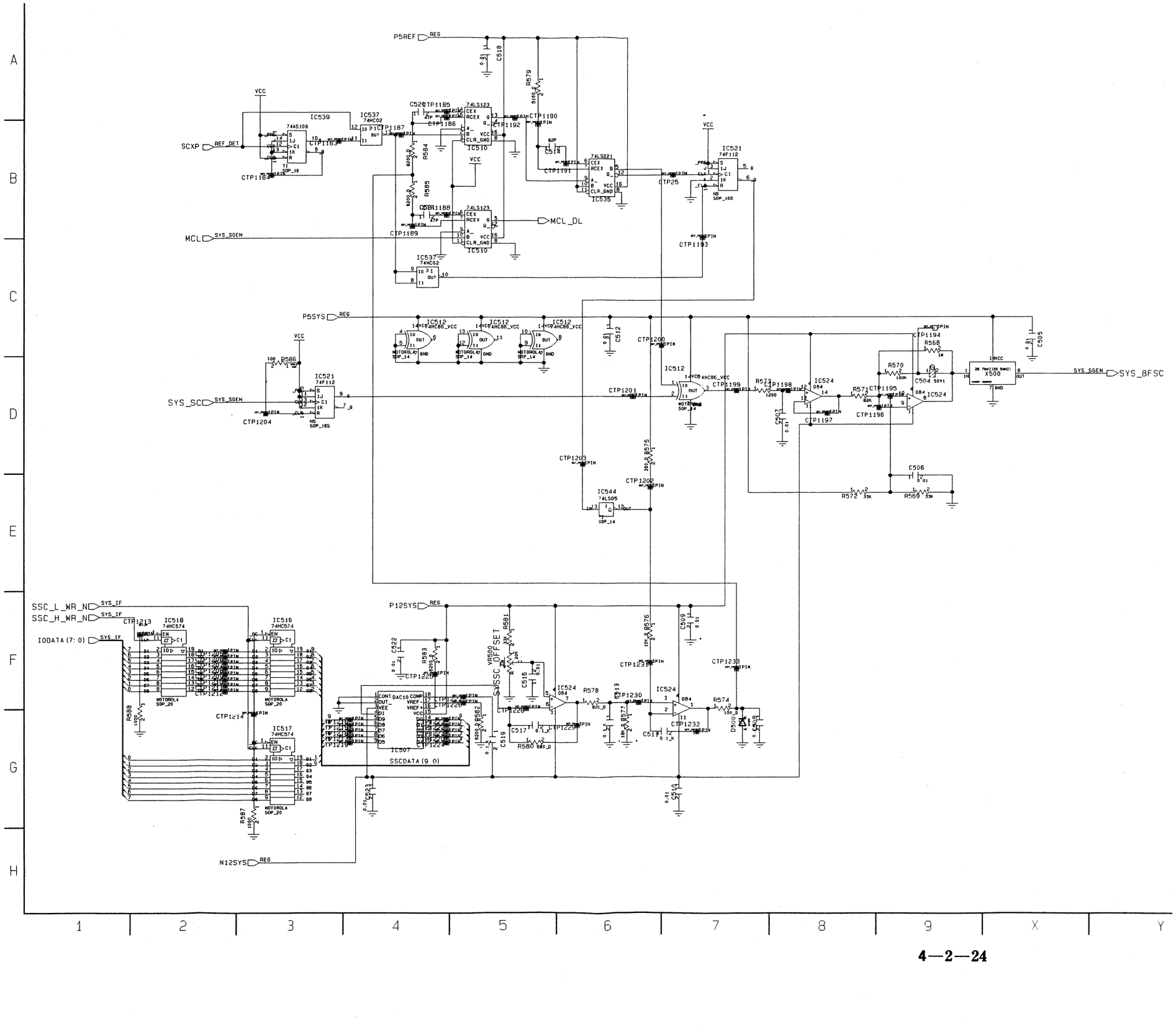

AV DSP (M 36/46) VIDEO PROCESS REF IF SCHEMATIC DIAGRAM

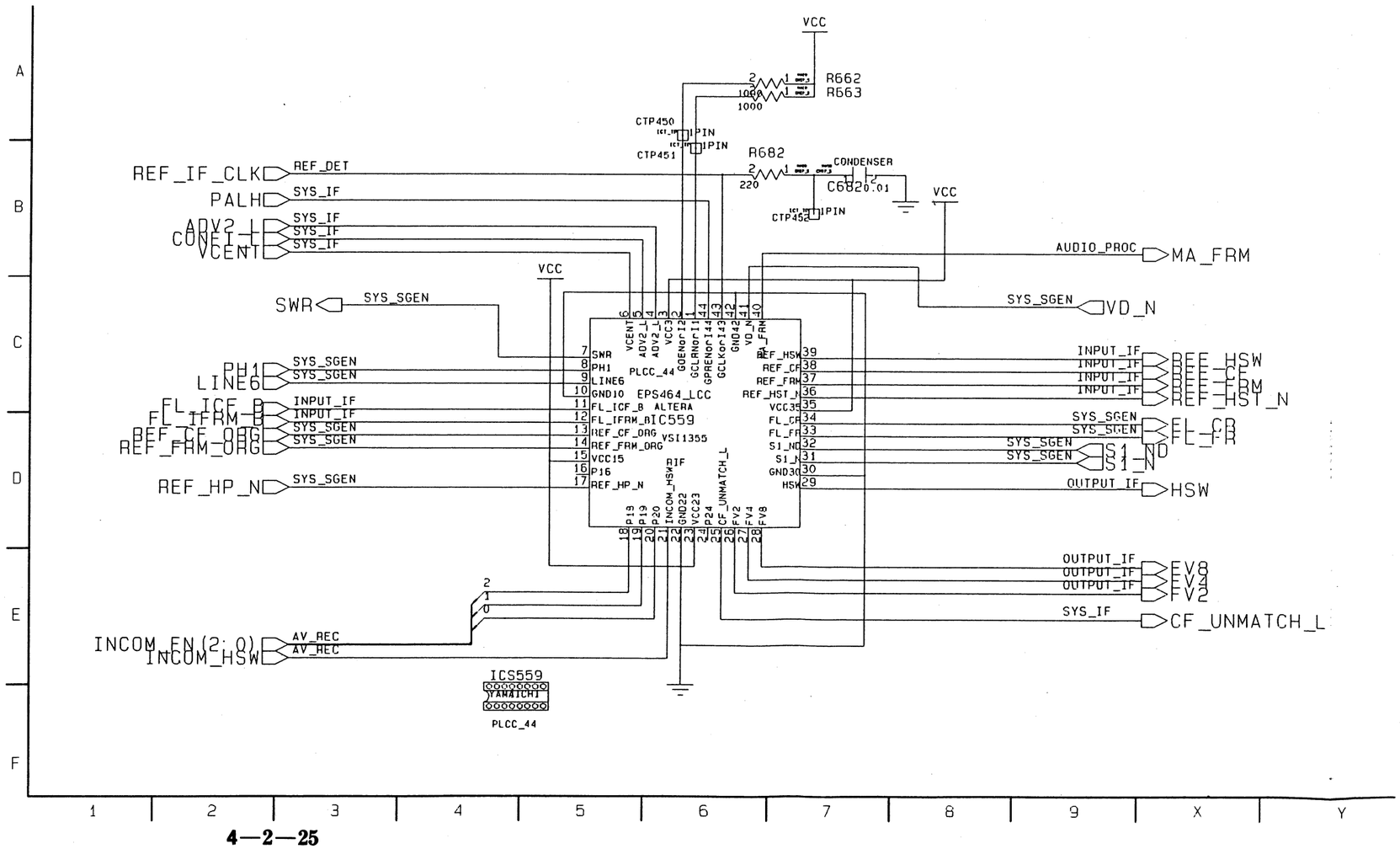

AV DSP (M 37/46) VIDEO PROCESS SYSTEM SGEN SCHEMATIC DIAGRAM

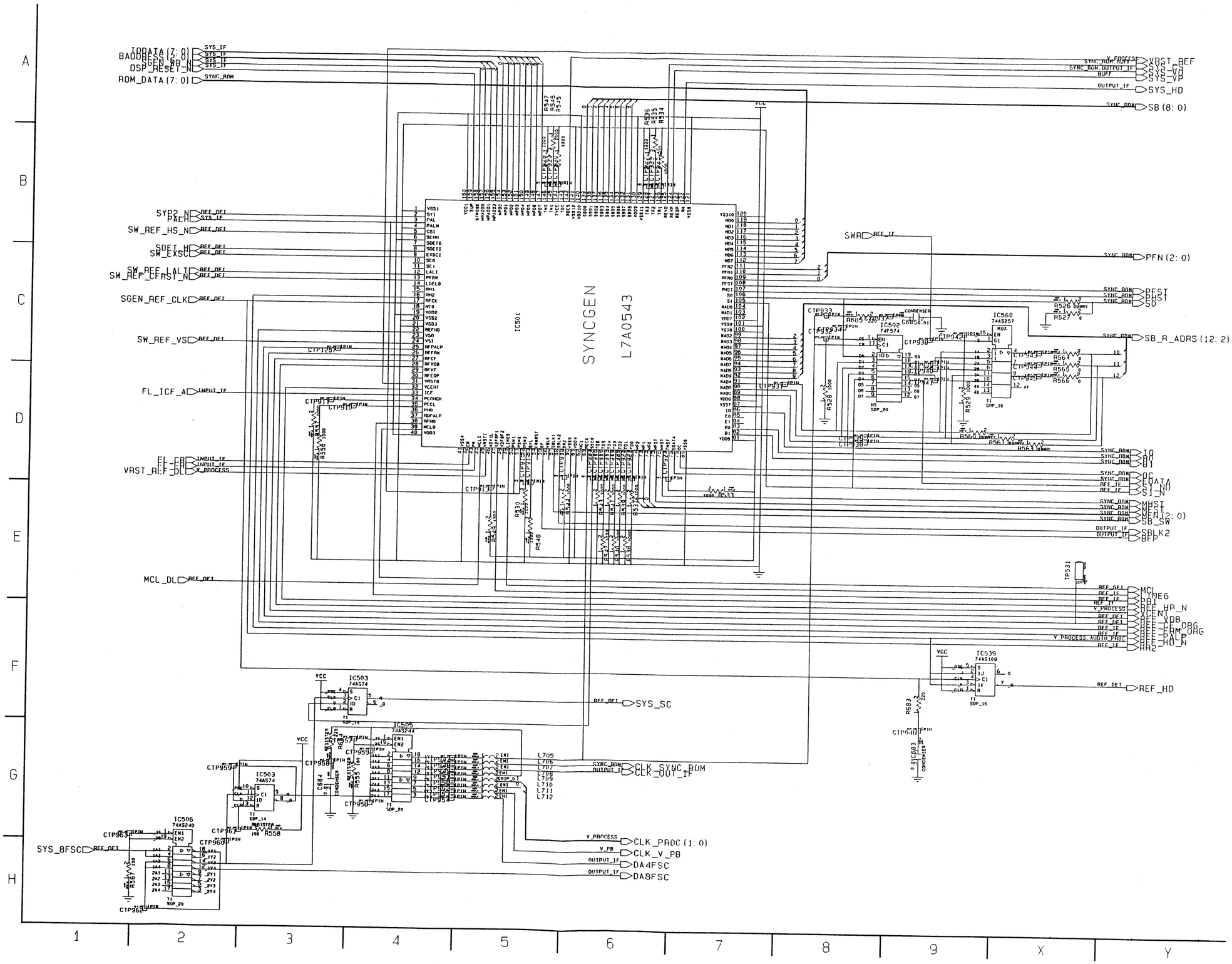

AV DSP (M 38/46) VIDEO PROCESS SYNC ROM SCHEMATIC DIAGRAM

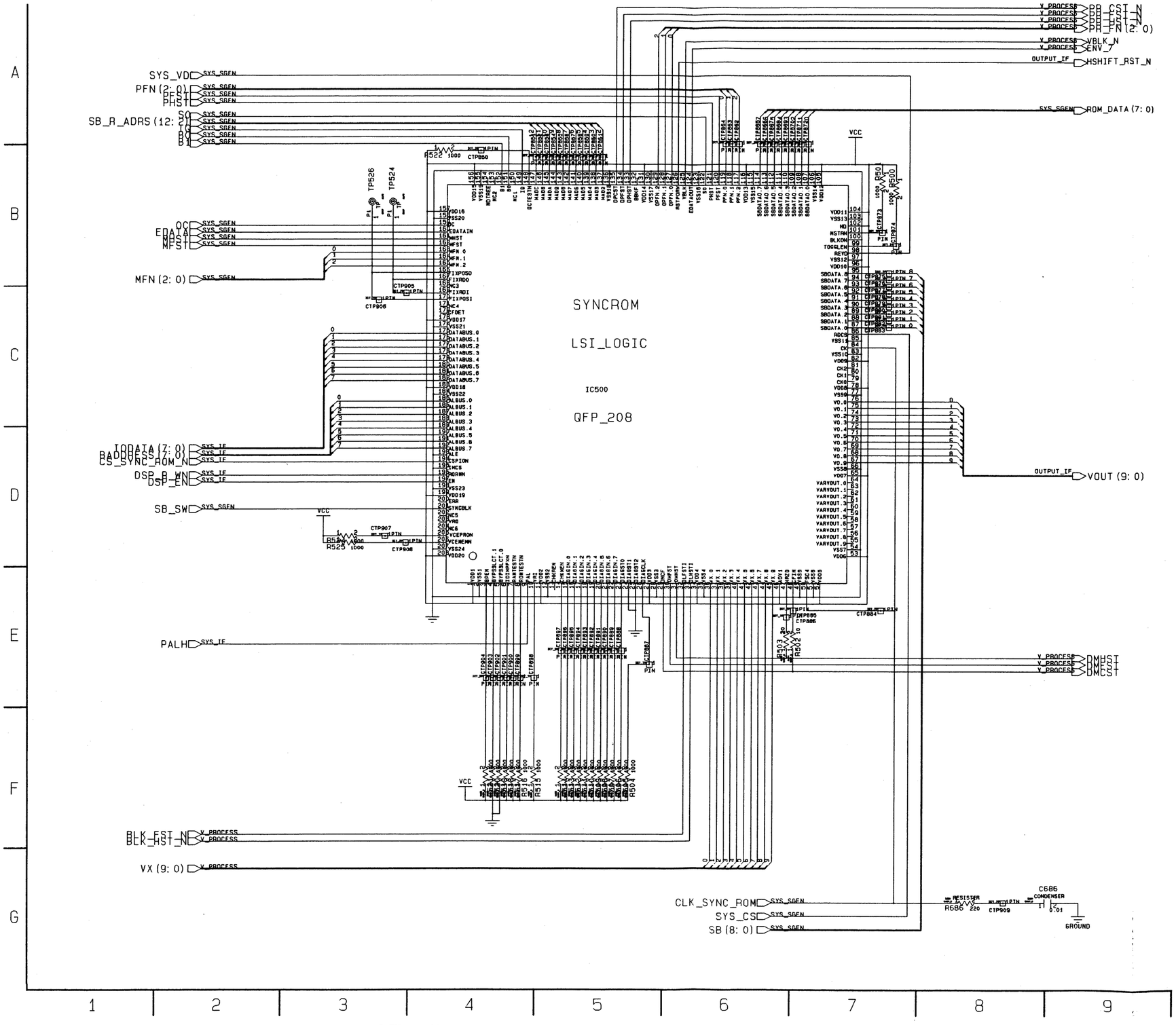

AV DSP (M 39/46) VIDEO PROCESS CONNECTION SCHEAMTIC DIAGRAM

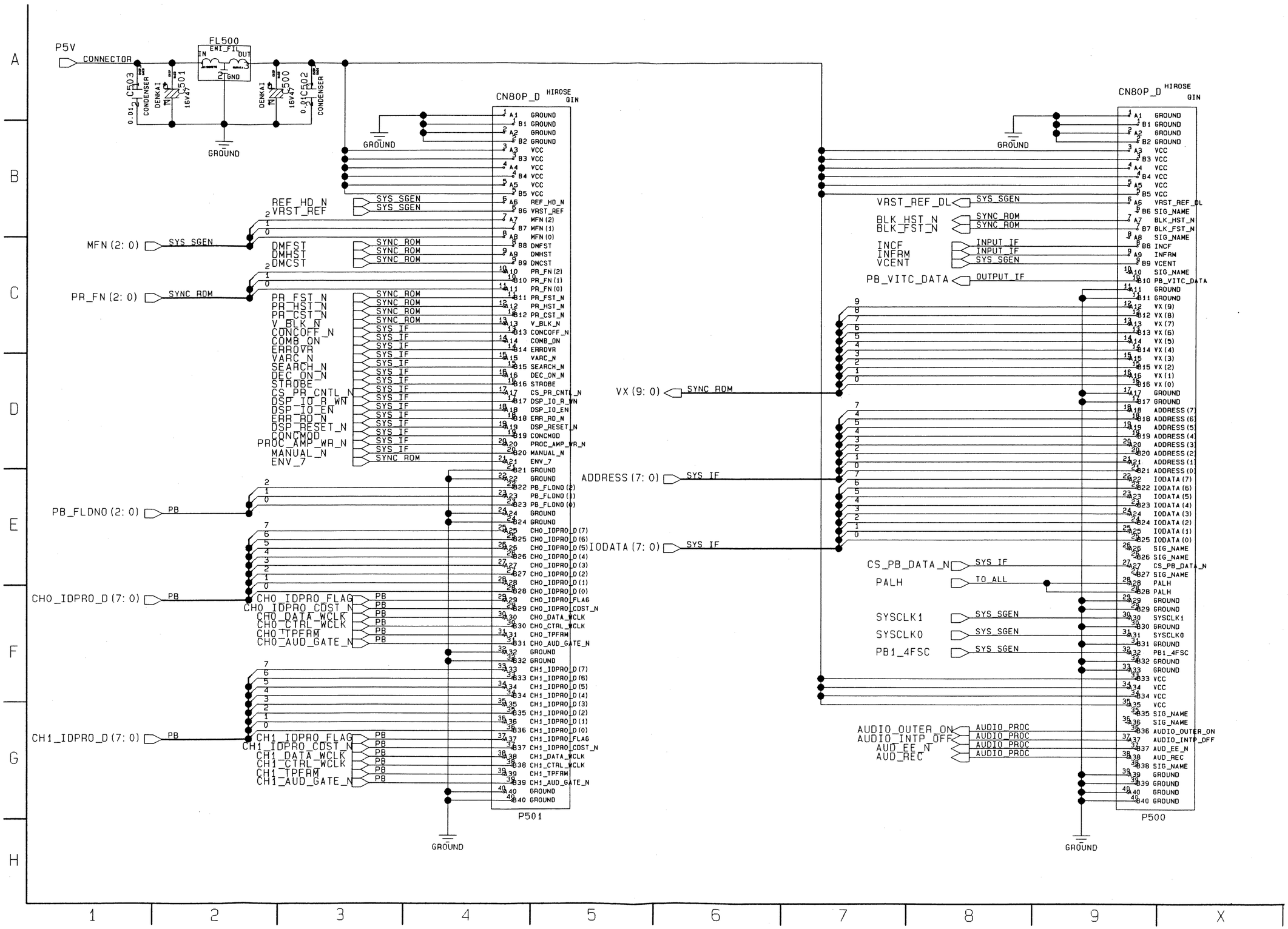

AV DSP (M 40/46) OUTPUT INTERFACE SCHEMATIC DIAGRAM

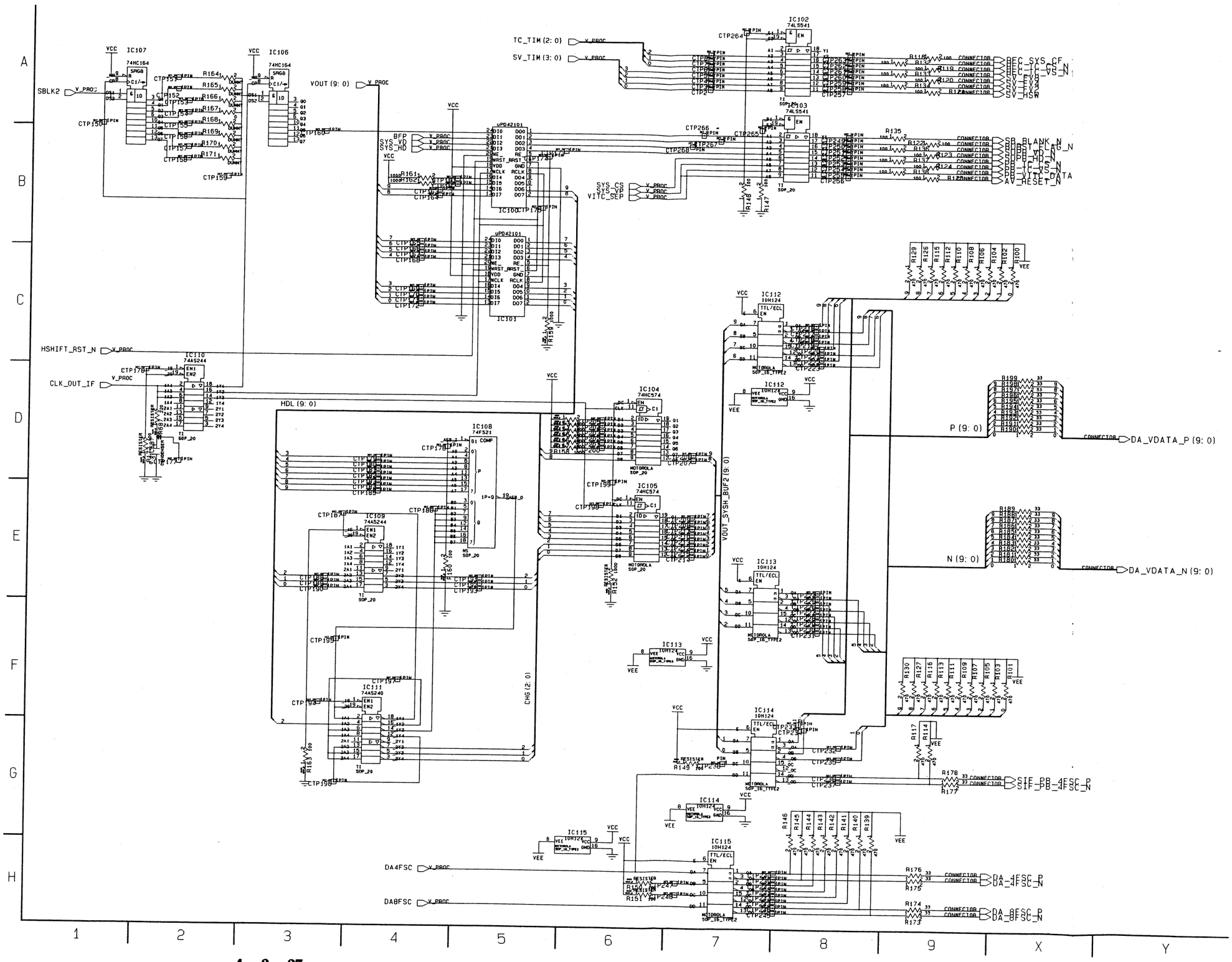

AV DSP (M 41/46) PASSCON SCHEMATIC DIAGRAM

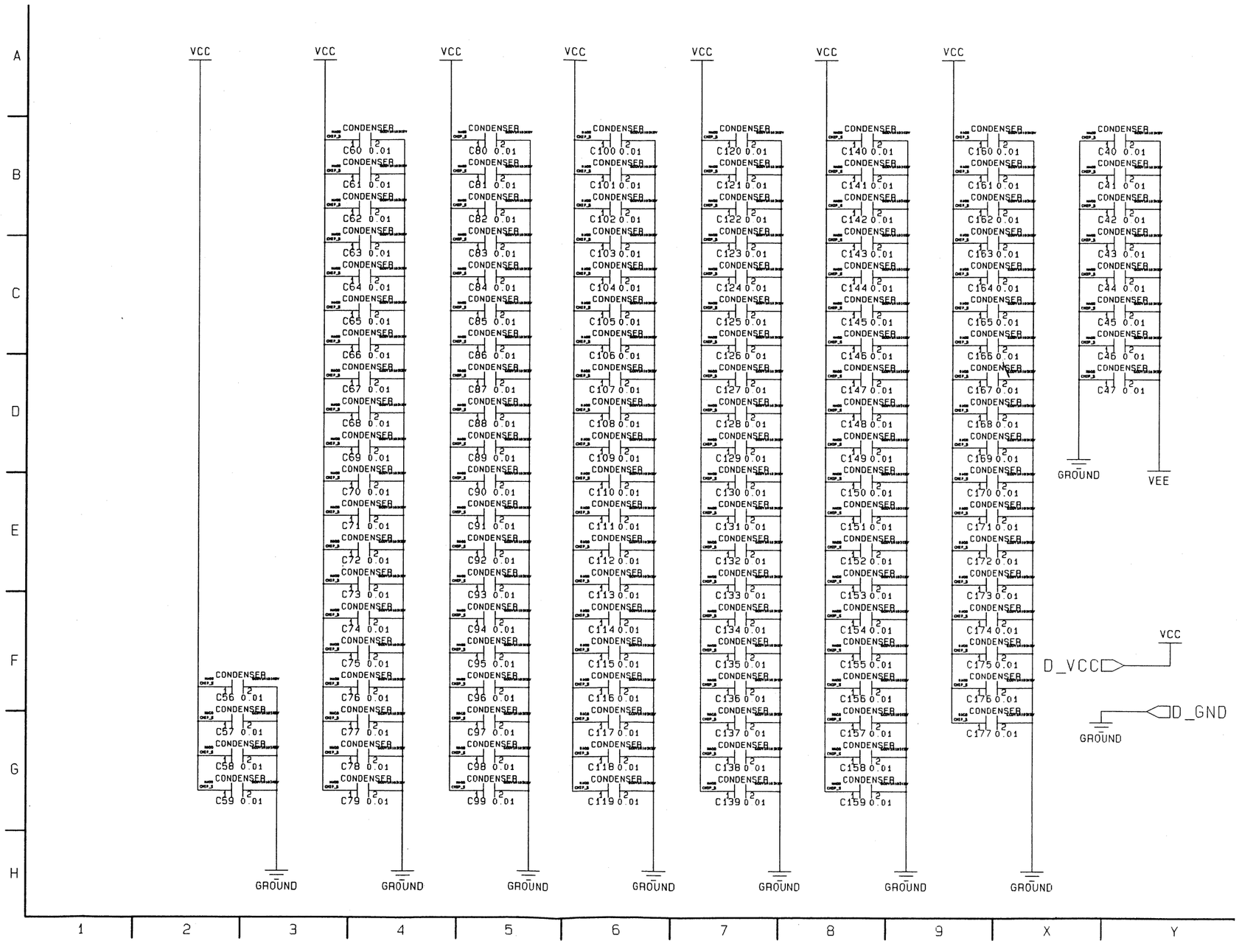

AV DSP (M 42/46) AV REC SCHEMATIC DIAGRAM

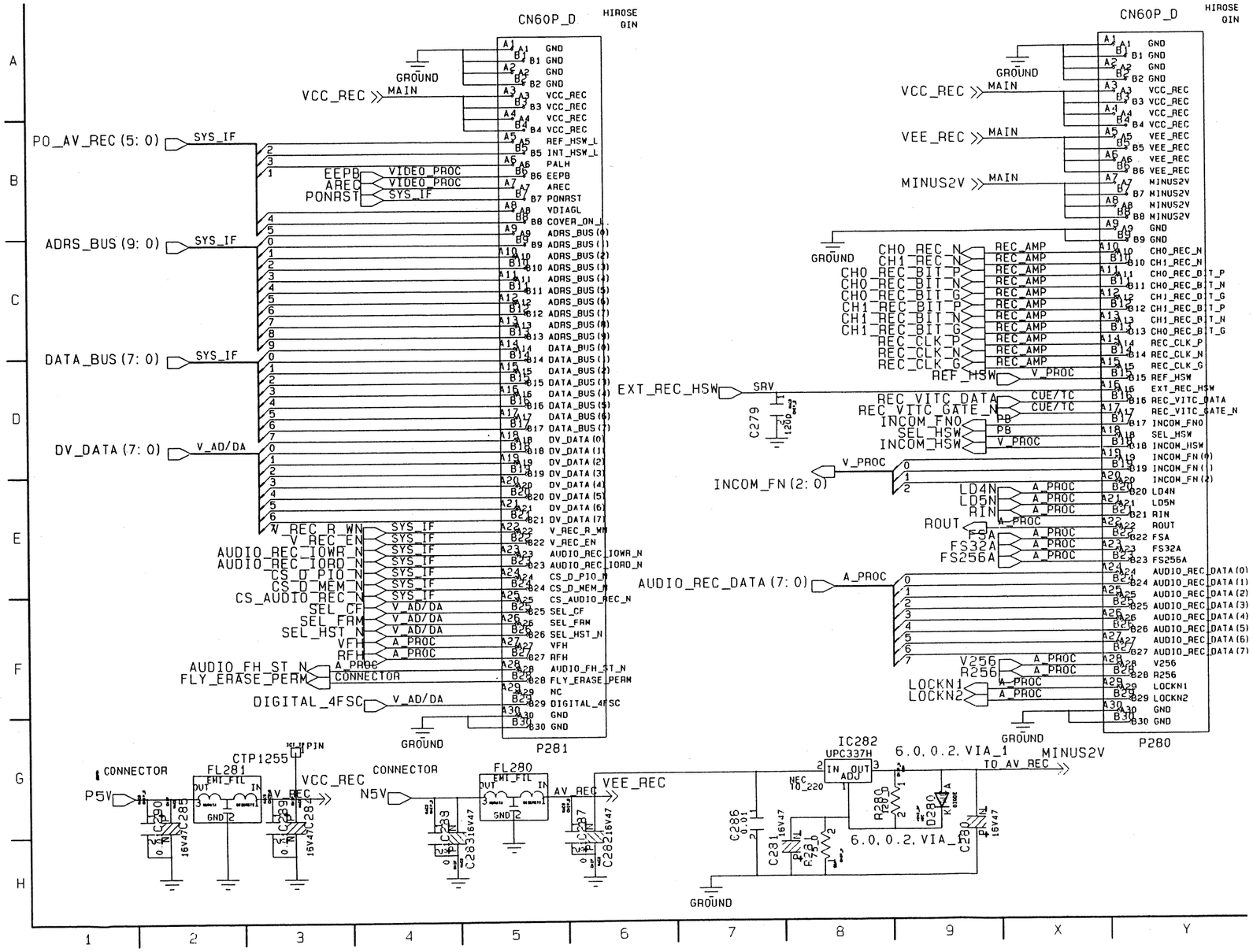

AV DSP (M 43/46) INPUT INTERFACE SCHEMATIC

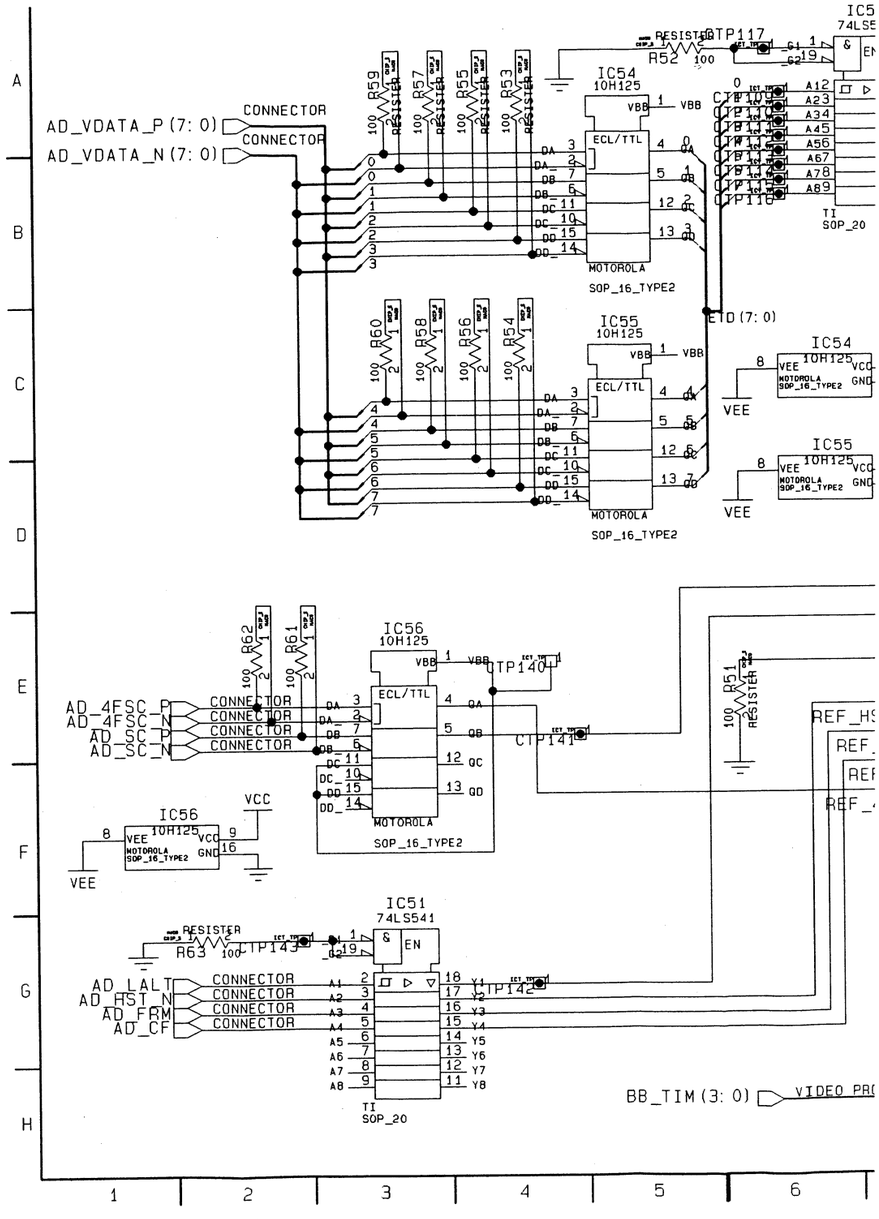

REVERSE SIDE

AV DSP (M 40/46, 41/46)

RFACE SCHEMATIC DIAGRAM

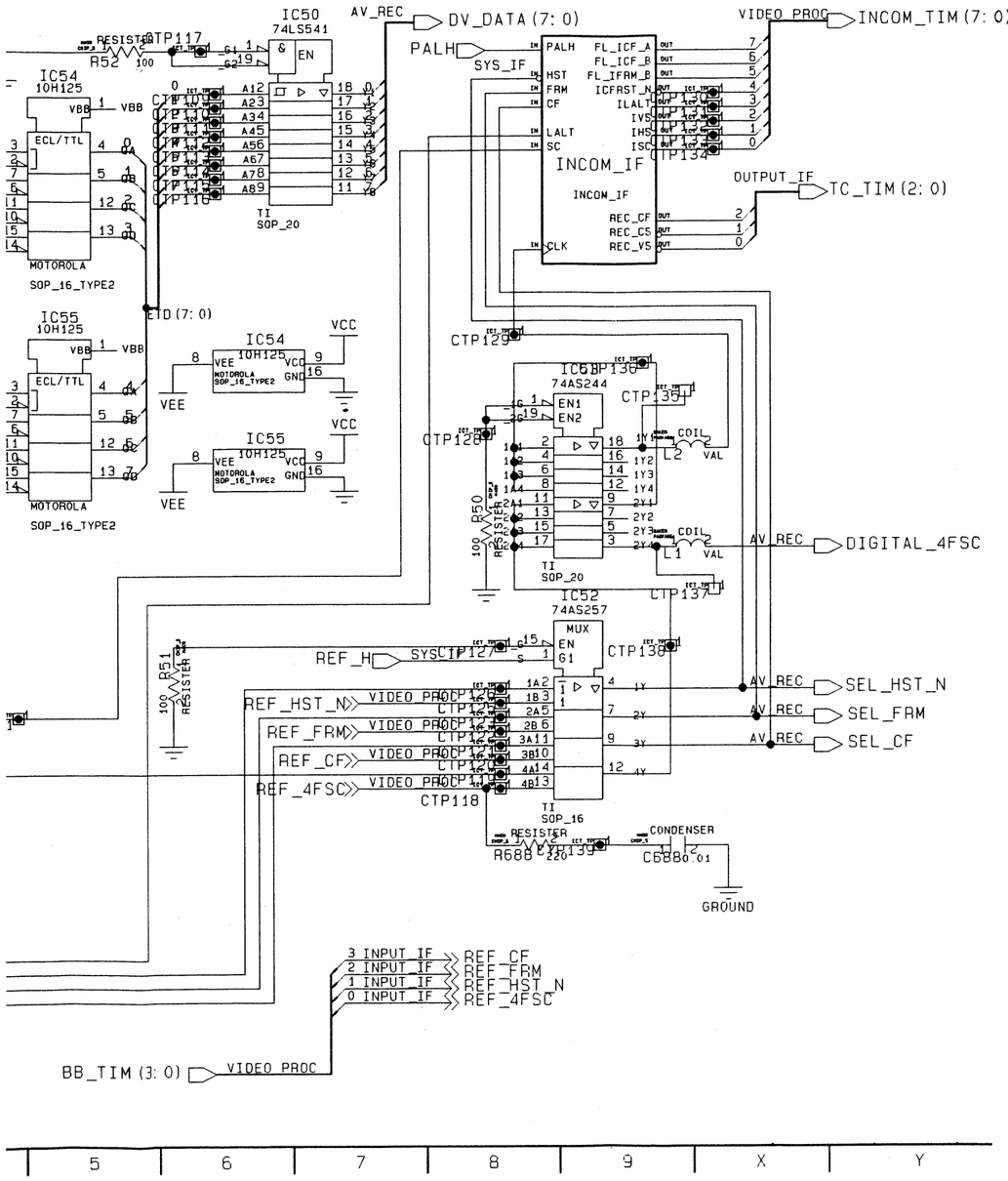

AV DSP (M 44/46) INPUT INTERFACE/INCOM INTERFACE SCHEMATIC DIAGRAM

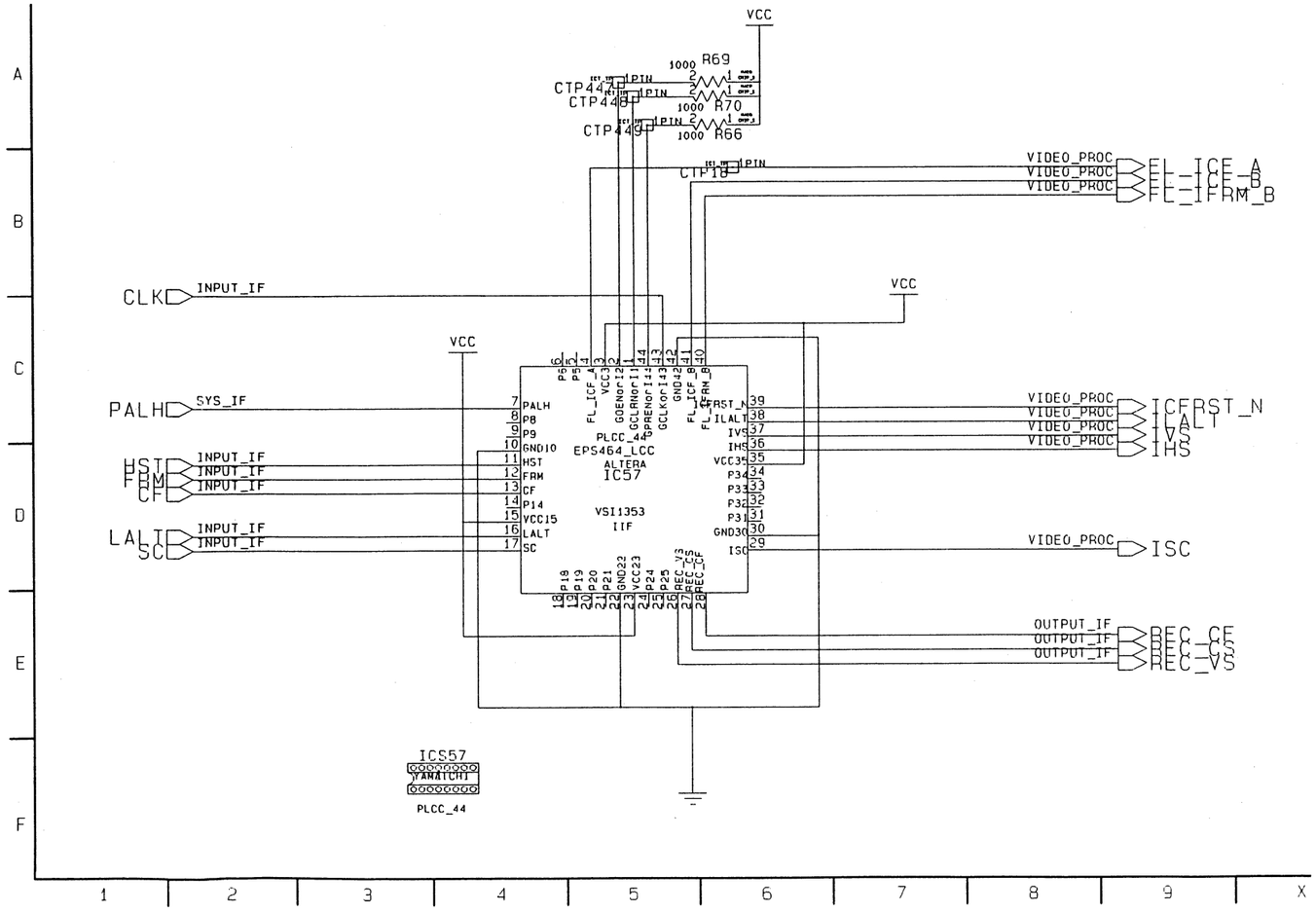

AV DSP (M 45/46) SYSTEM INTERFACE SCHEMATIC DIAGRAM

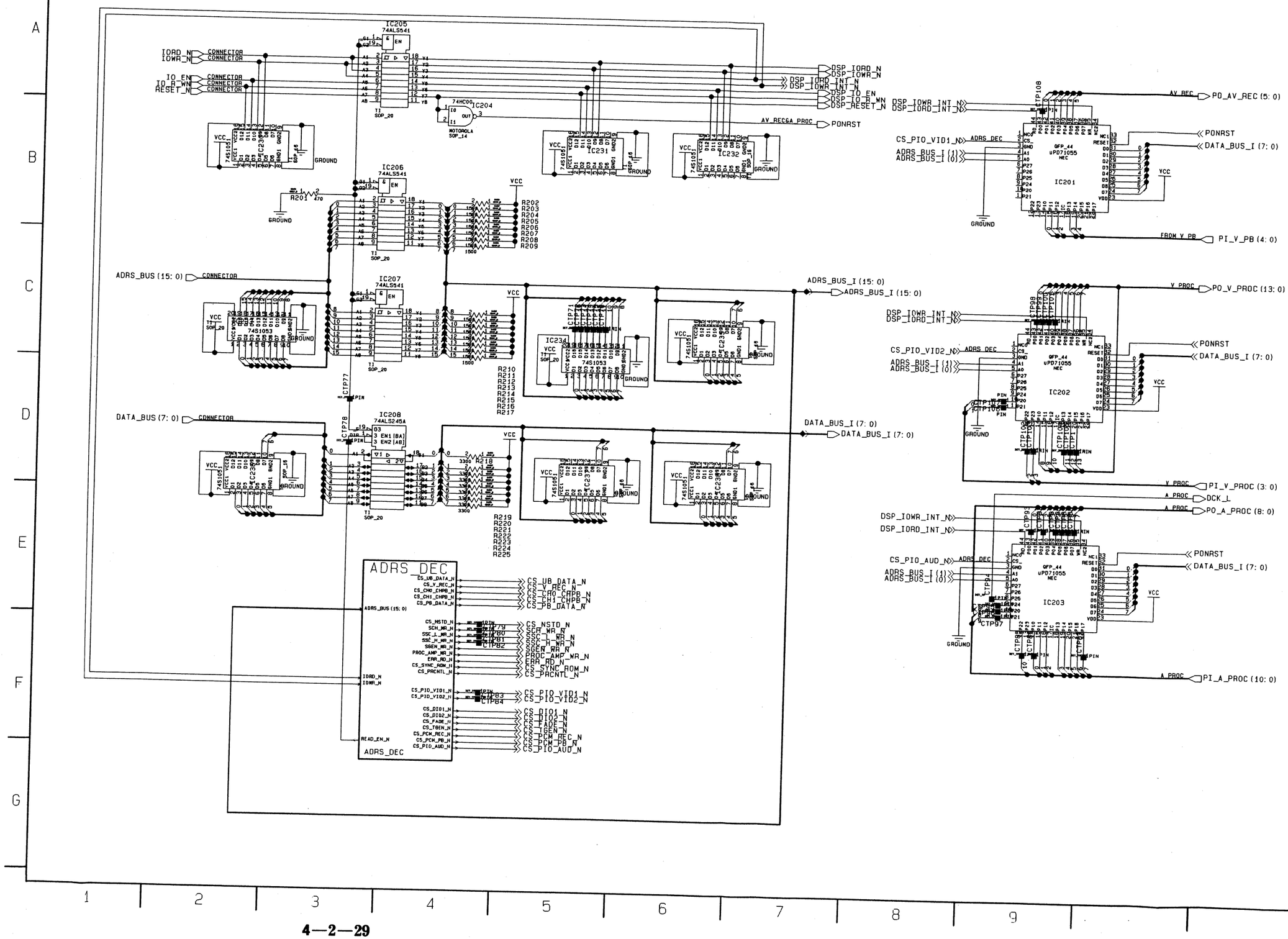

AV DSP (M 46/46) SYSTEM INTERFACE/ADDRESS DECODER SCHEMATIC DIAGRAM

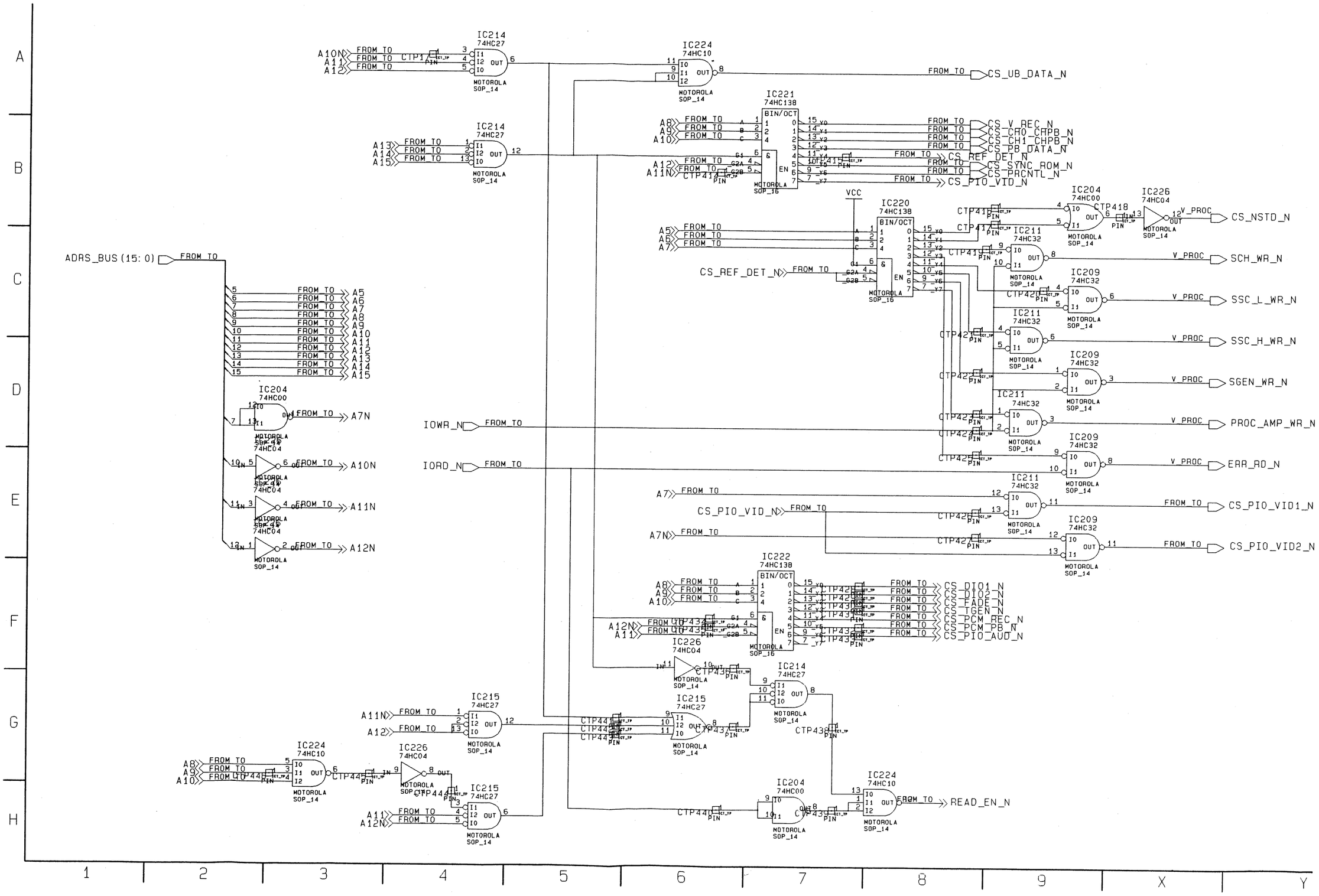

AV DSP SUB 1 (M SUB 1 1/12) OVERALL SCHEMATIC DIAGRAM

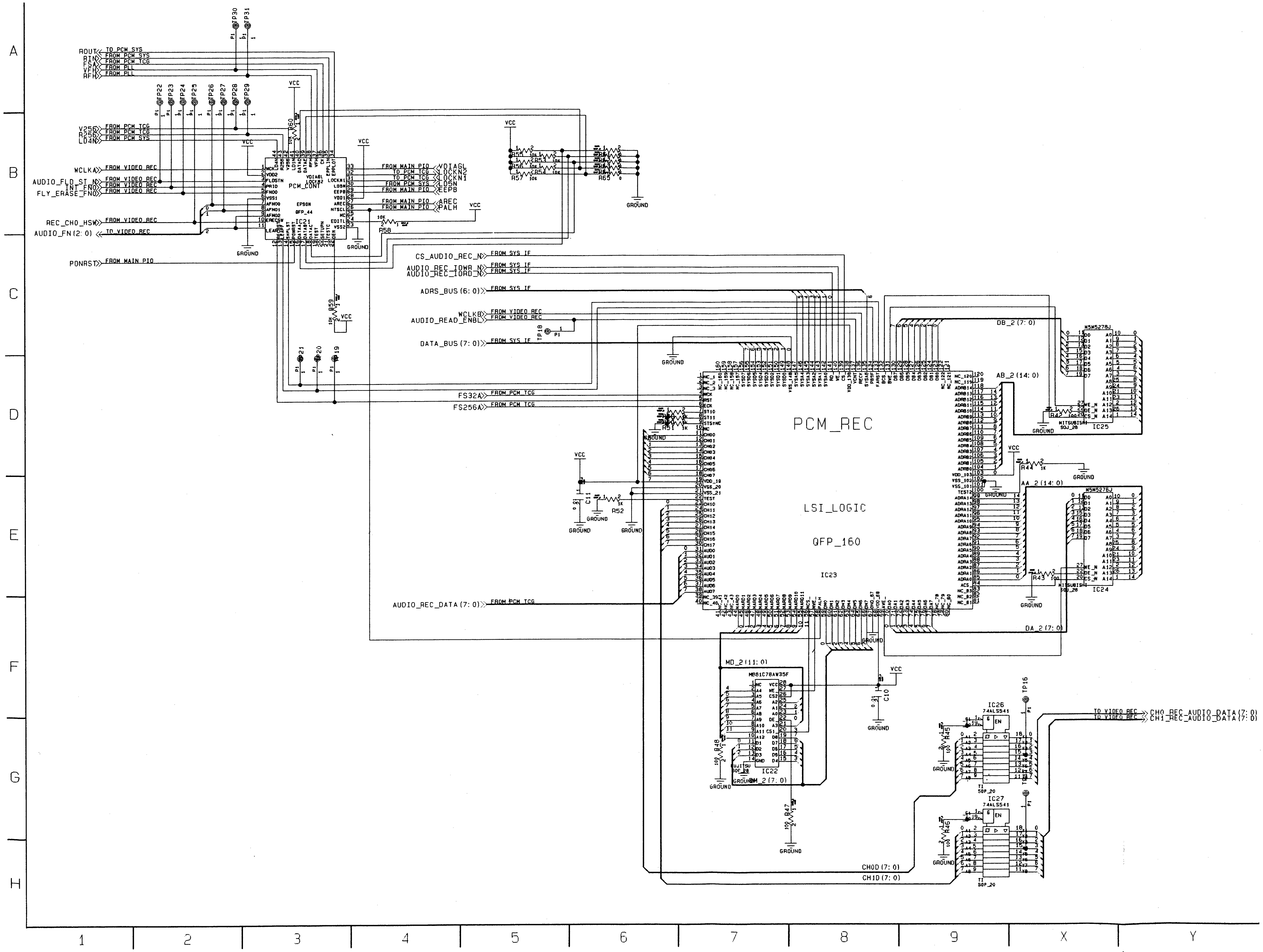

REVERSE SIDE

AV DSP (M 45/46, 46/46)

AV DSP SUB 1 (M SUB 1 2/12) PCM REC SCHEMATIC DIAGRAM

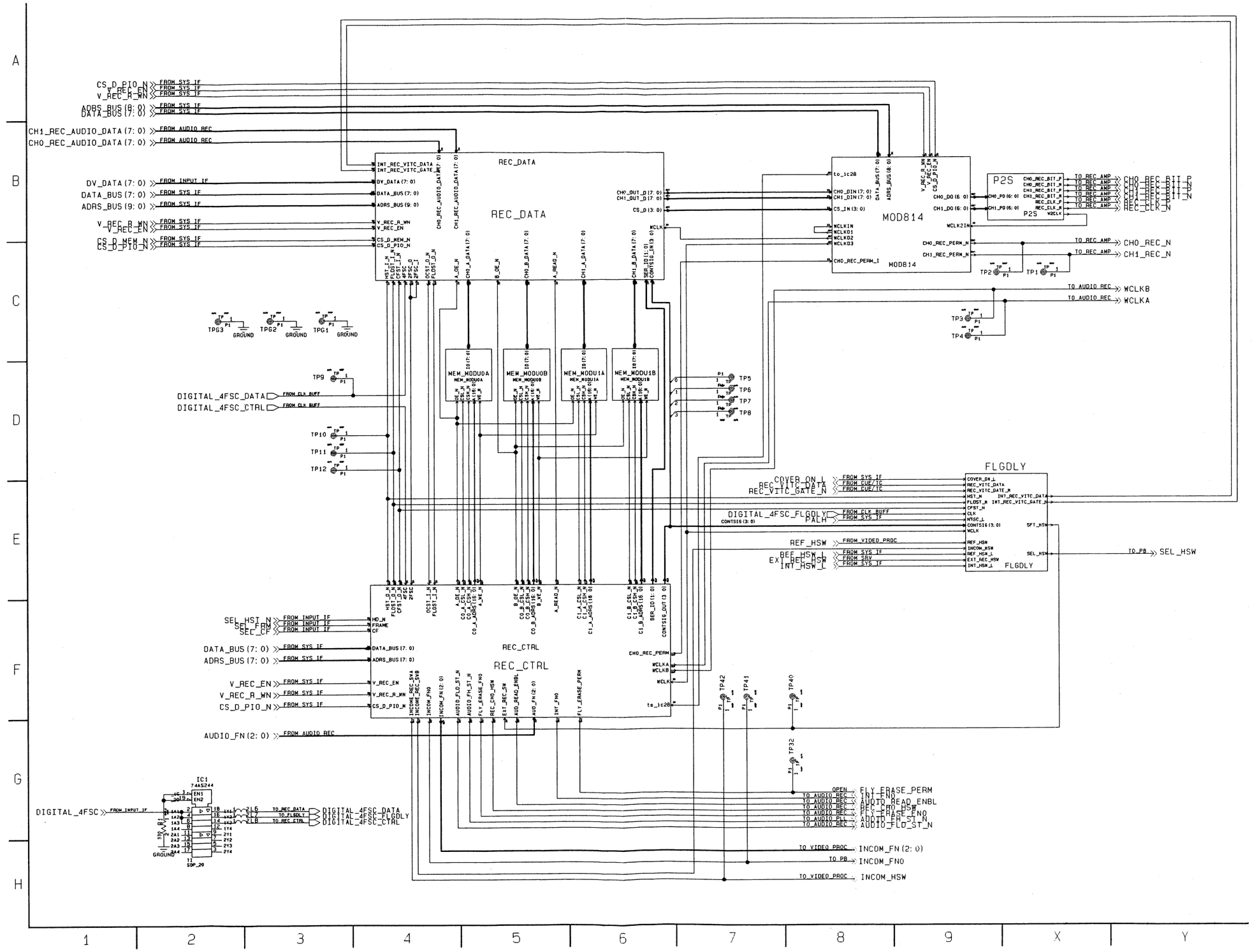

AV DSP SUB 1 (M SUB 1 3/12) CONNECTOR SCHEMATIC DIAGRAM

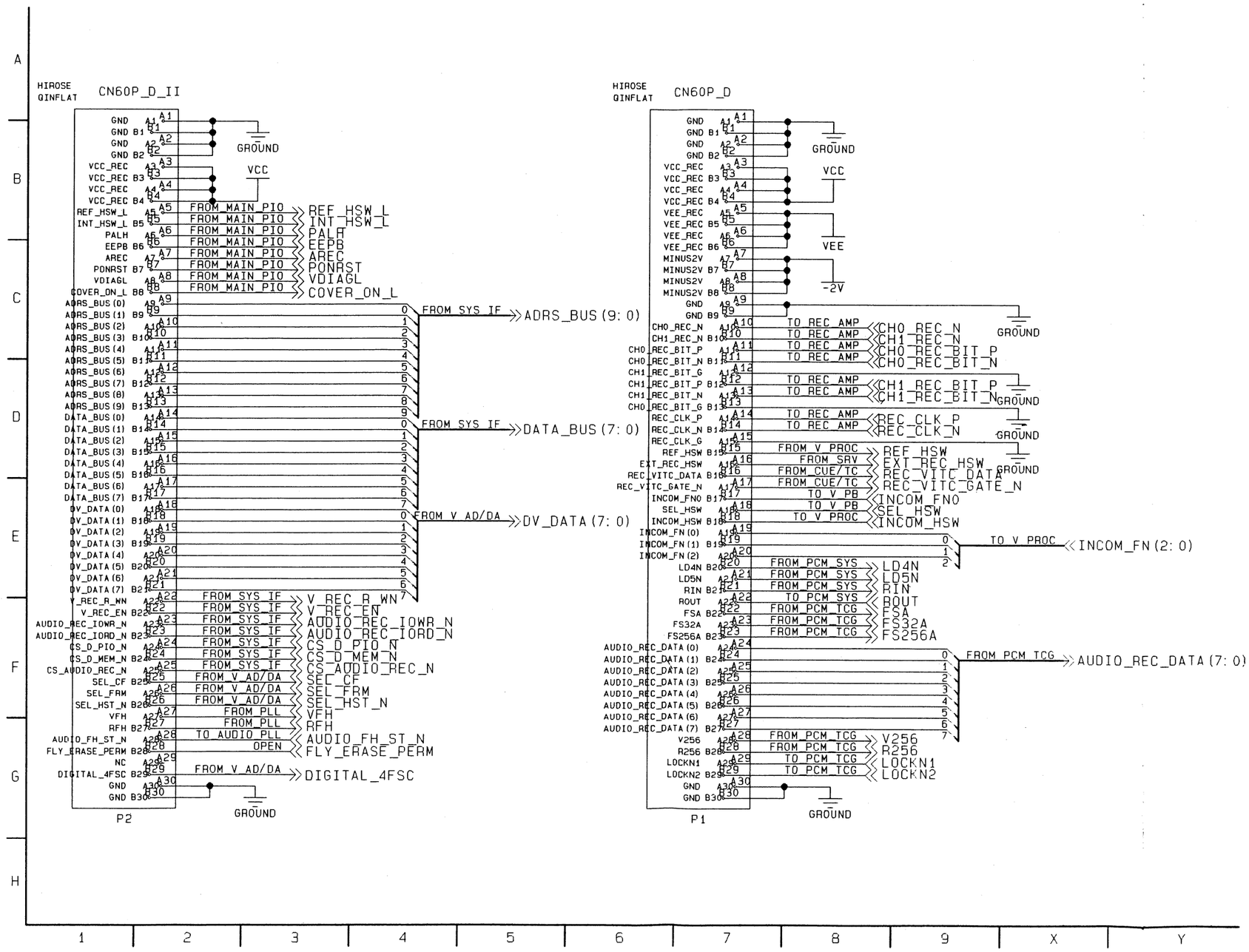

AV DSP SUB 1 (M SUB 1 4/12) REC CONTROL SCHEMATIC DIAGRAM

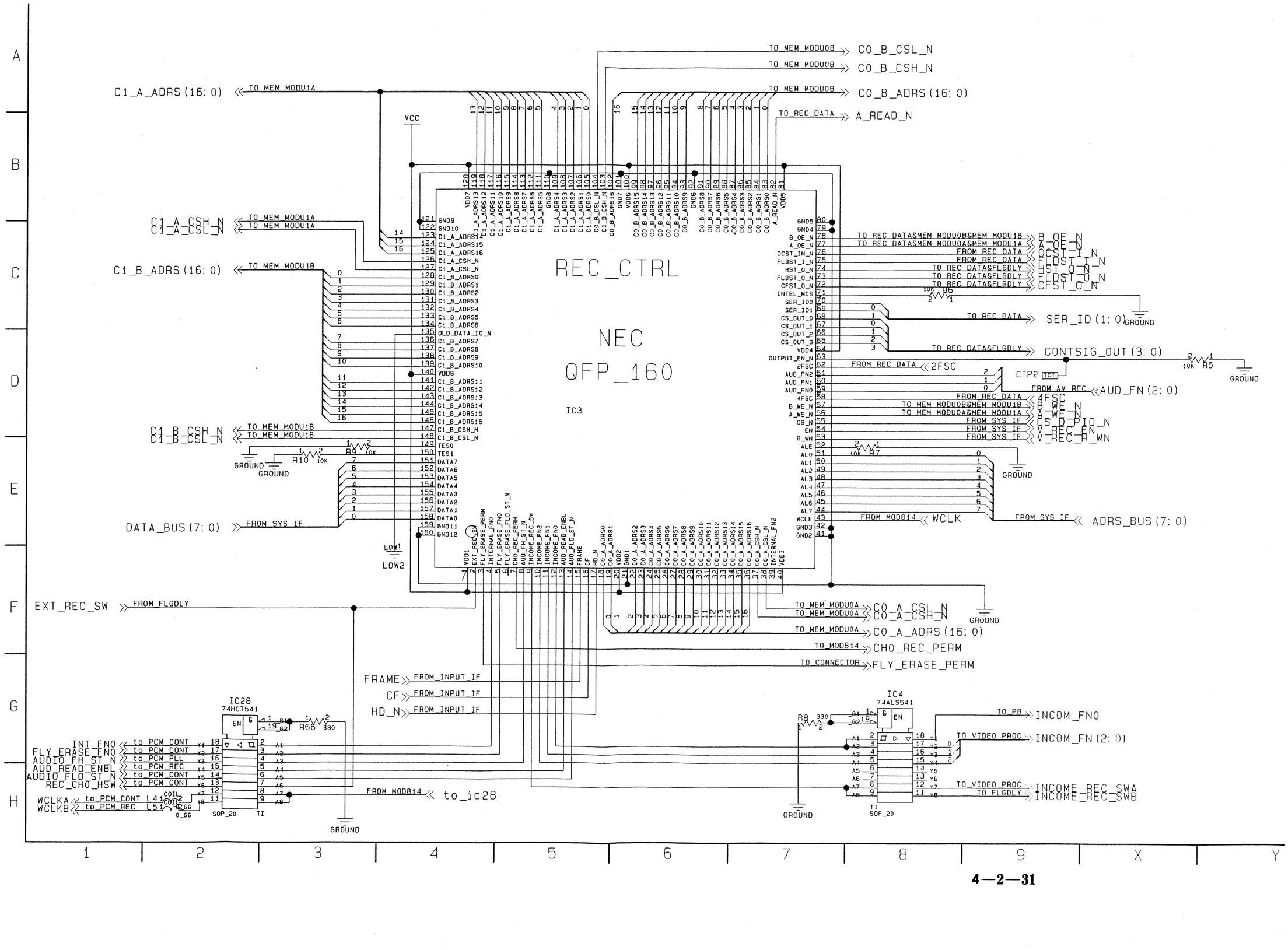

AV DSP SUB 1 (M SUB 1 5/12) REC DATA SCHMATIC DIAGRAM

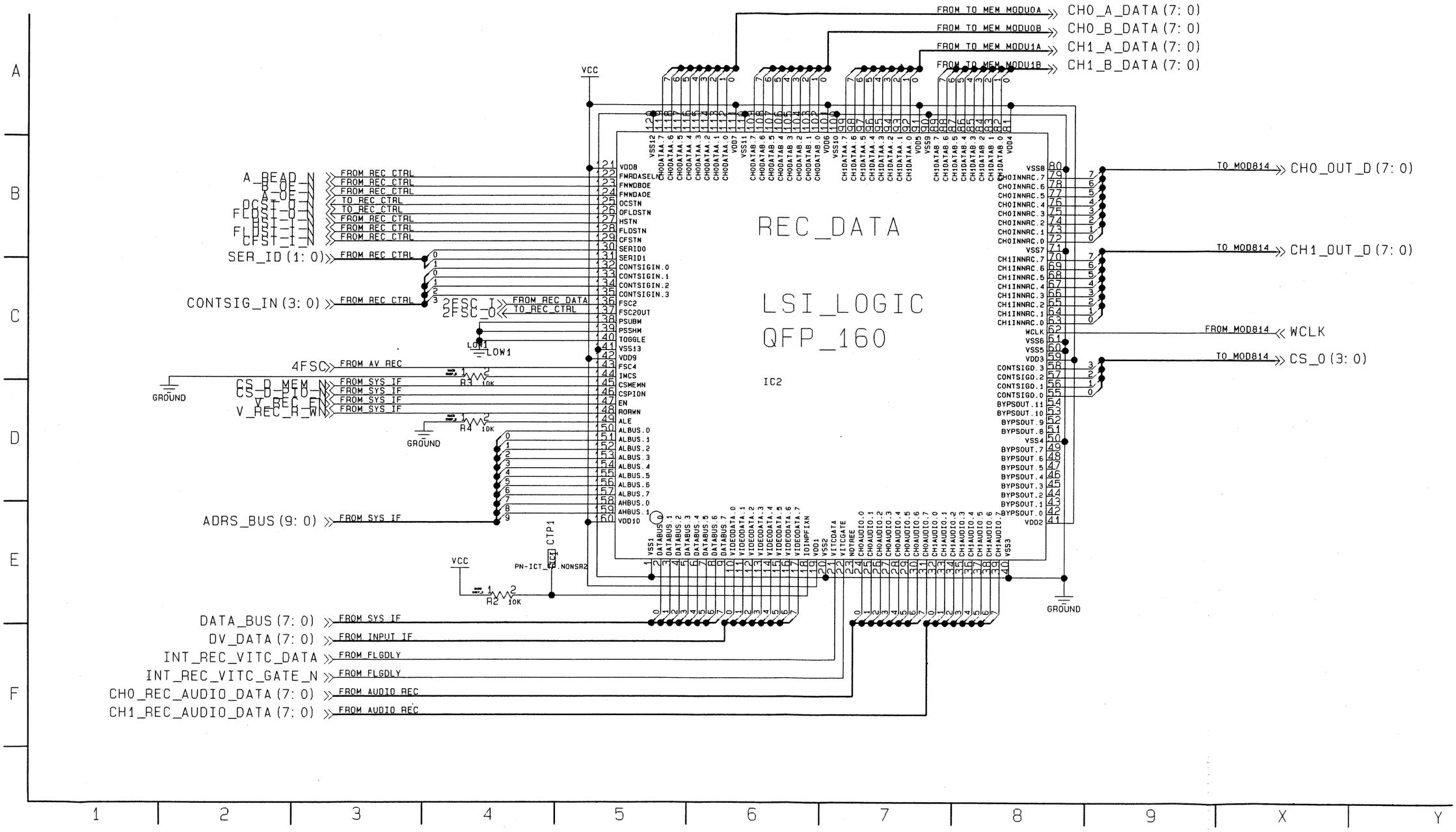

AV DSP SUB 1 (M SUB 1 6/12) MEMORY MODULATOR 0A SCHEMATIC DIAGRAM

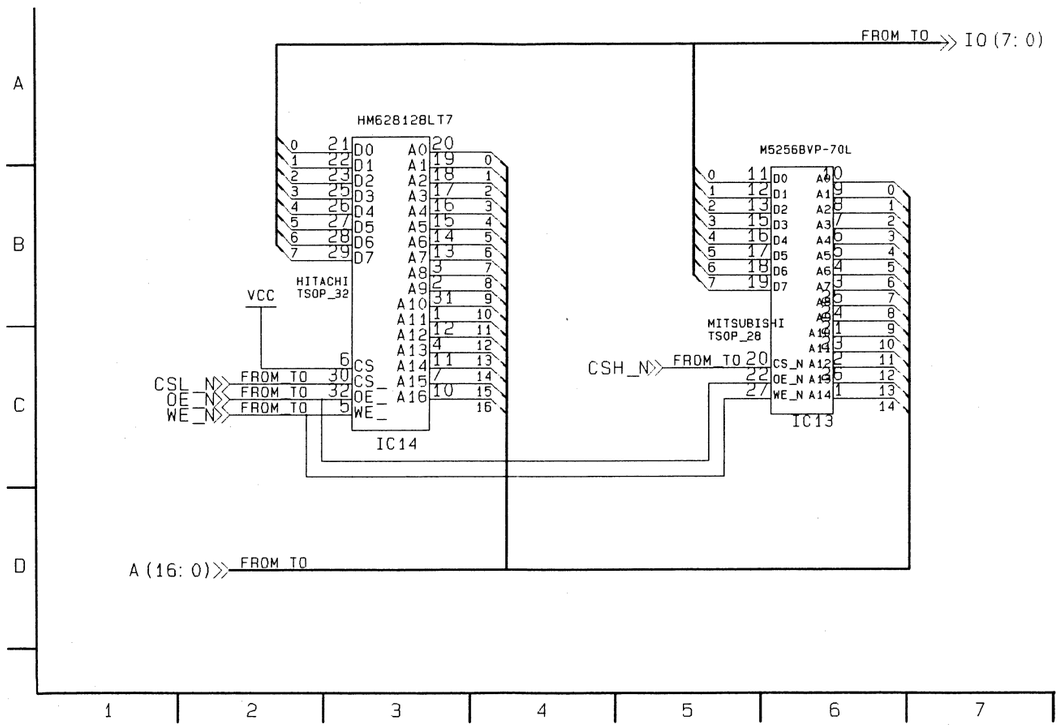

AV DSP SUB 1 (M SUB 1 7/12) MEMORY MODULATOR 0B SCHEMATIC DIAGRAM

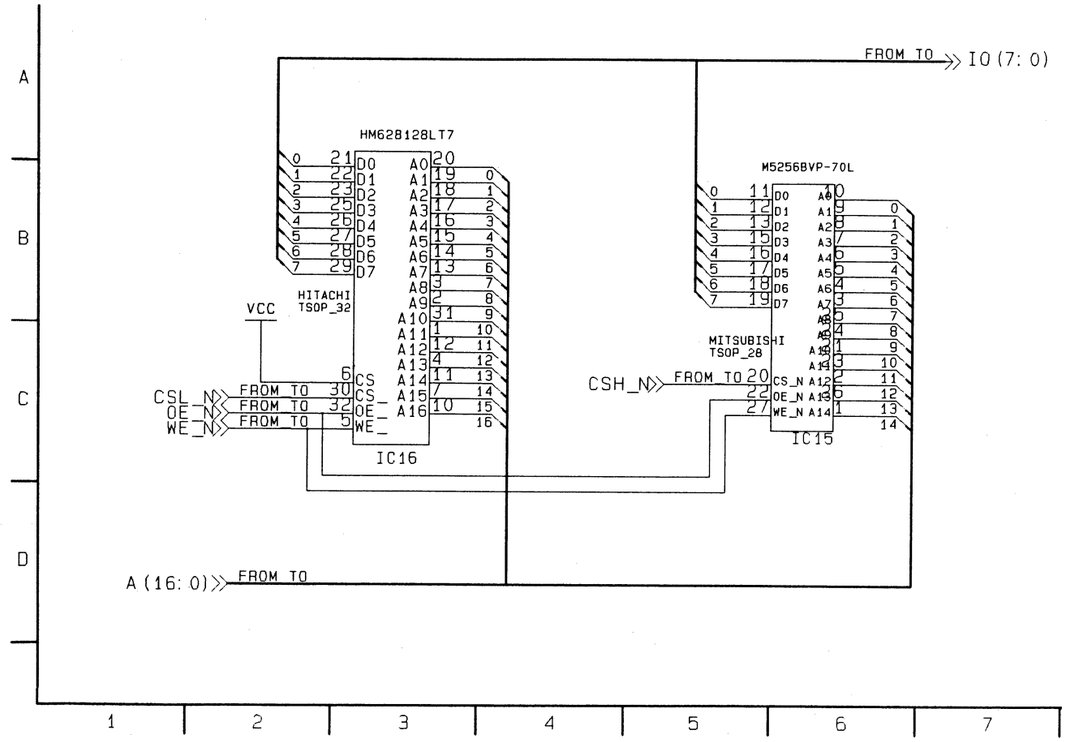

AV DSP SUB 1 (M SUB 1 8/12) MEMORY MODULATOR 1A SCHEMATIC DIAGRAM

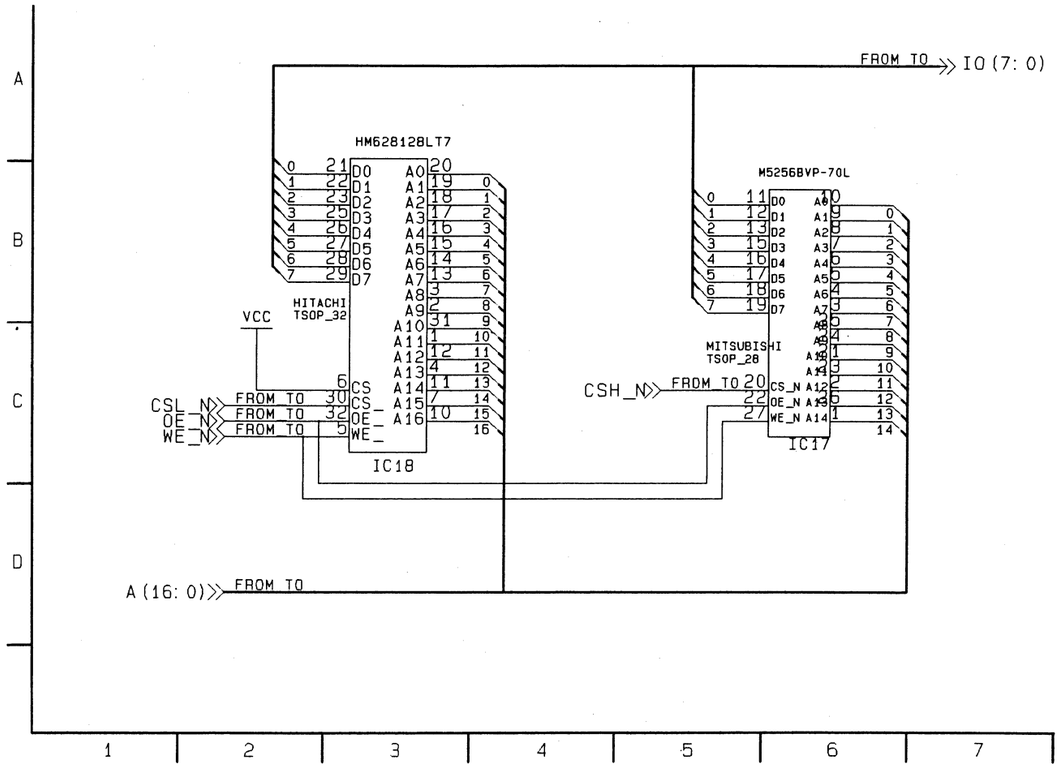

AV DSP SUB 1 (M SUB 1 9/12) MEMORY MODULATOR 1B SCHEMATIC DIAGRAM

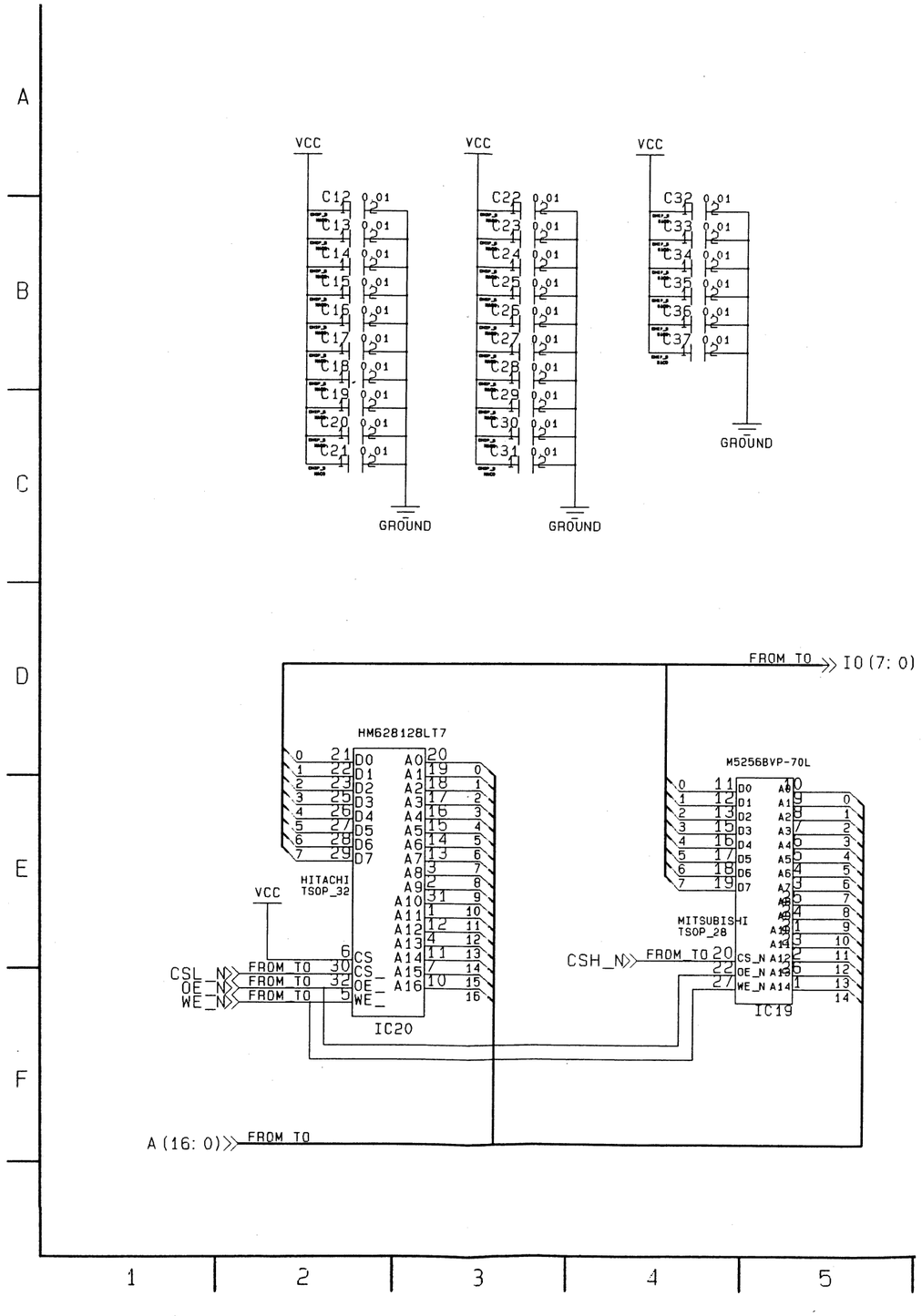

AV DSP SUB 1 (M SUB 1 10/12) FLING DELAY SCHEMATIC DIAGRAM

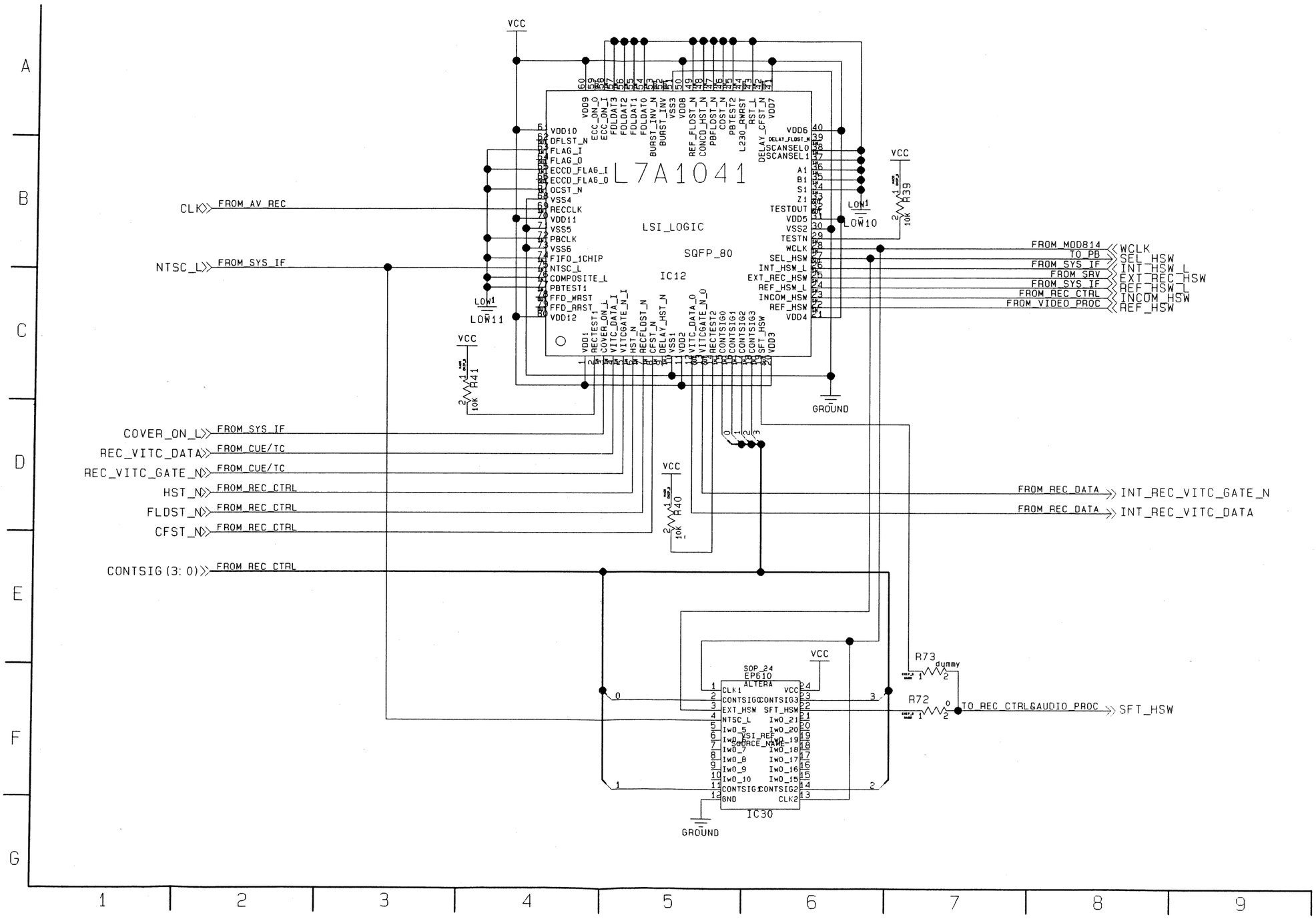

[0] IO(7:0)

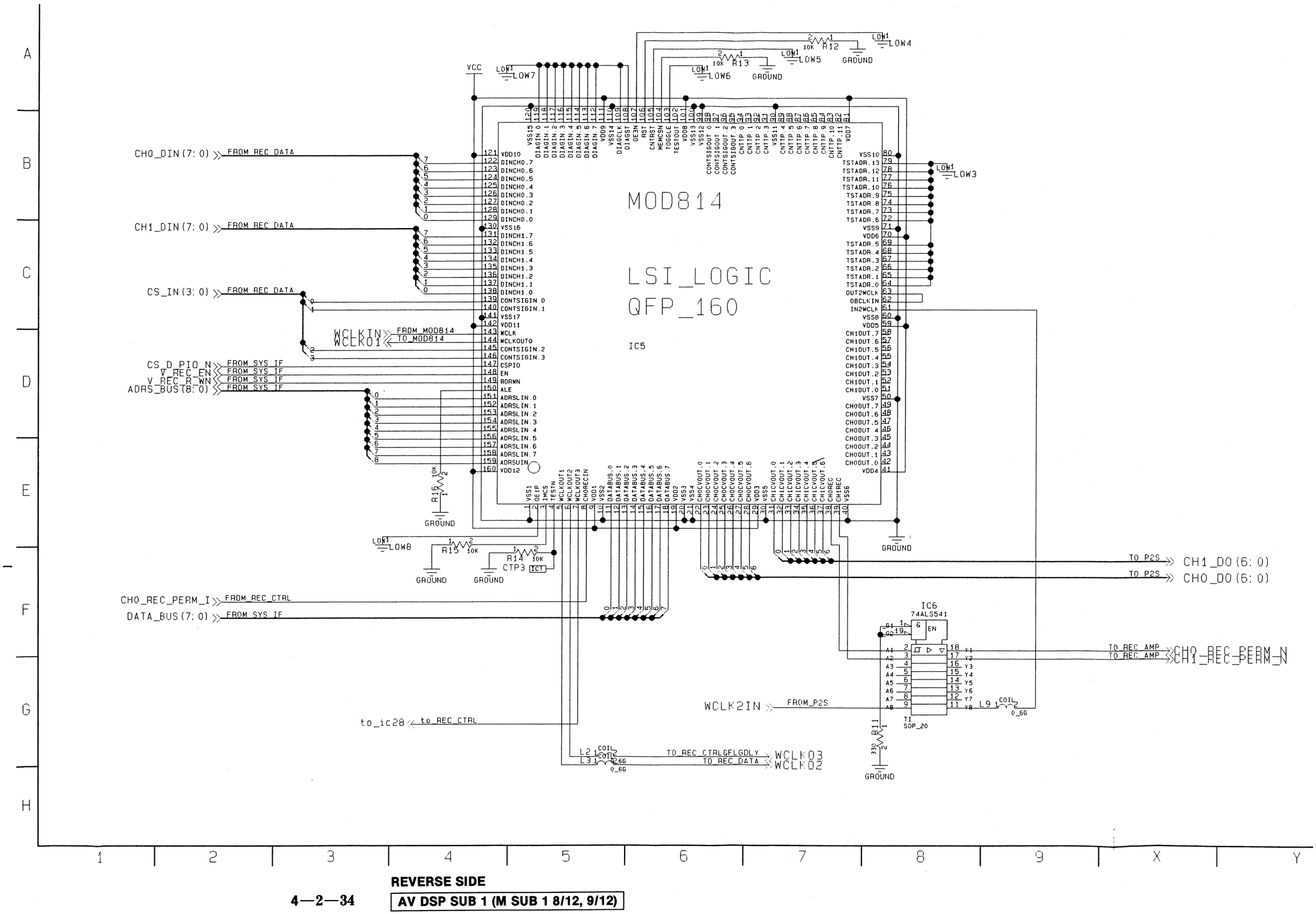
MOD814
LSI_LOGIC
QFP_160
IC5
VCC
LOW1
LOW7
LOW4
LOW5
LOW6
LOW3
LOW8
R12 10K
R13 10K
R14 10K
R15 10K
R16 10K
GROUND
CTP3 1CT
CH0_DIN(7:0) FROM REC DATA
CH1_DIN(7:0) FROM REC DATA
CS_IN(3:0) FROM REC DATA
WCLKIN FROM MOD814
WCLKO1 TO MOD814
CS_D_PIO_N FROM SYS IF
V_REC_EN FROM SYS IF
V_REC_R_WN FROM SYS IF
ADRS_BUS(8:0) FROM SYS IF
CH0_REC_PERM_I FROM REC CTRL
DATA_BUS(7:0) FROM SYS IF
to_ic28 to REC CTRL
TO P2S CH1_DO(6:0)
TO P2S CH0_DO(6:0)
TO REC AMP CH0_REC_PERM_N
TO REC AMP CH1_REC_PERM_N
WCLK2IN FROM P2S
TO REC CTRL&FLGDLY WCLK03
TO REC DATA WCLK02
IC6
74ALS541
TI
SOP_20
L21 COIL 0_6G
L31 COIL 0_6G
L91 COIL 0_6G
R11 330

AV DSP SUB 1 (M SUB 1 12/12) P2S SCHEMATIC DIAGRAM

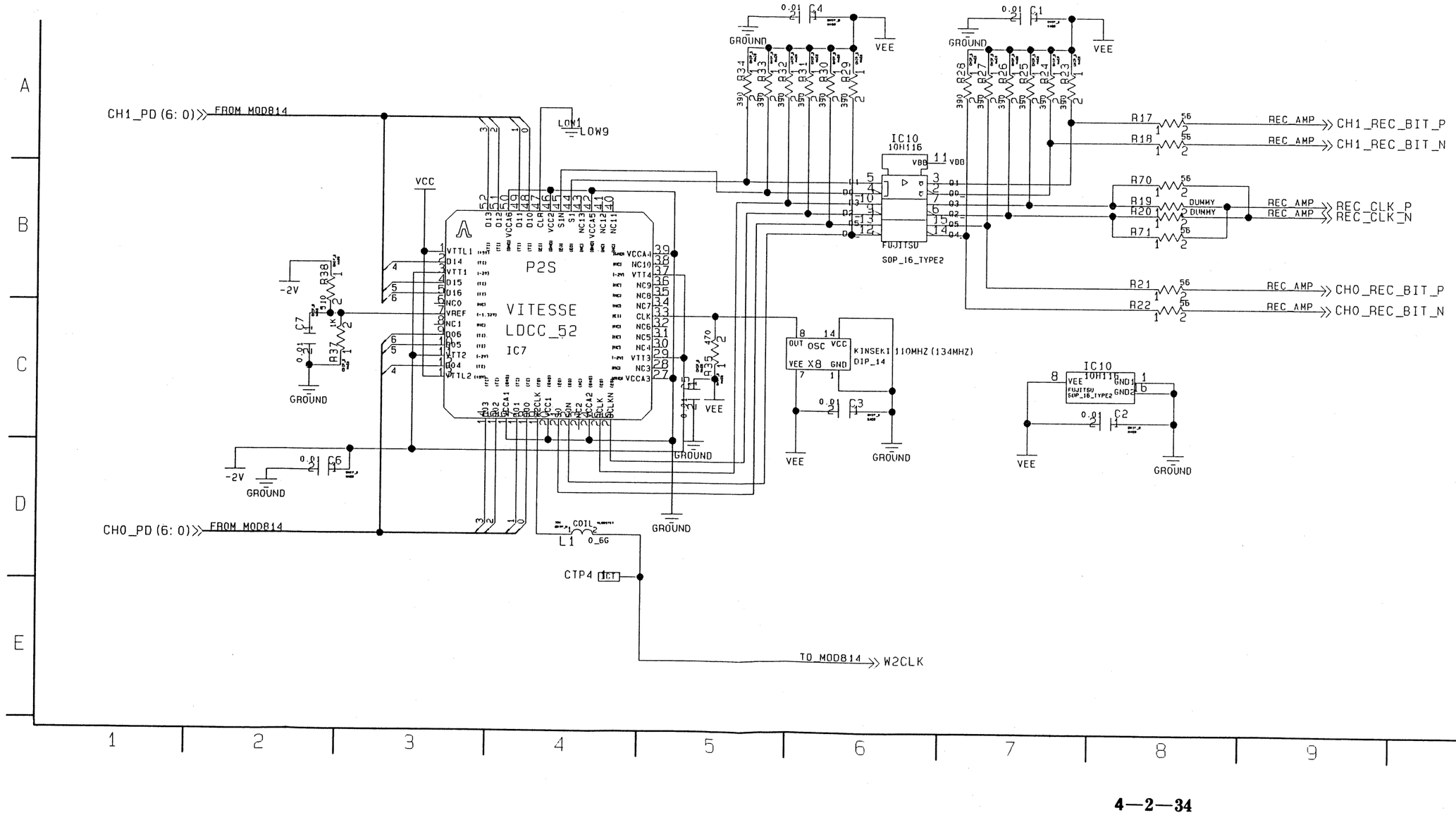

VIDEO PROCESS (M SUB 2 1/19) OVERALL SCHEMATIC DIAGRAM

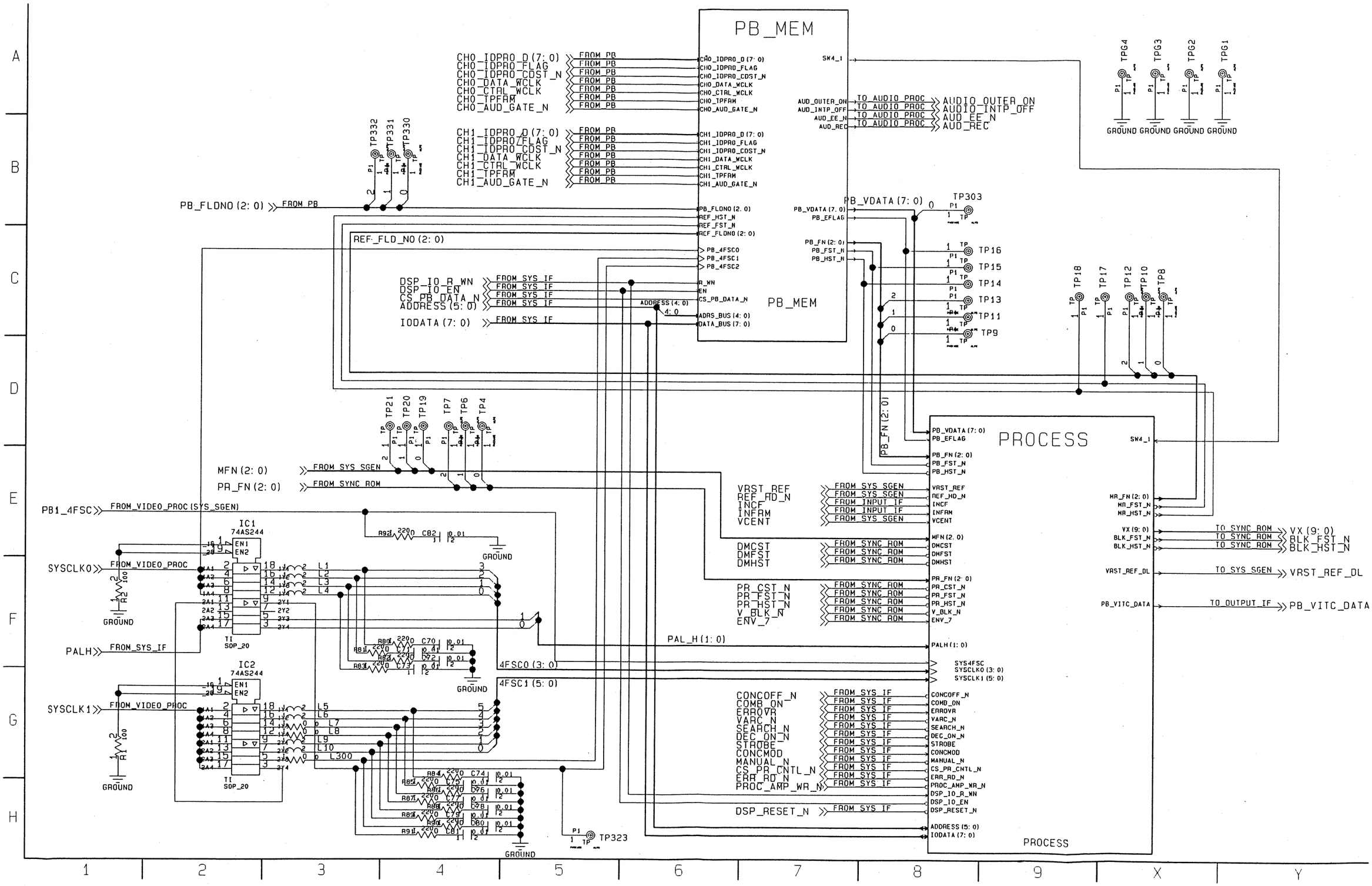

VIDEO PROCESS (M SUB 2 2/19) CONNECTOR/PASSCON SCHEMATIC DIAGRAM

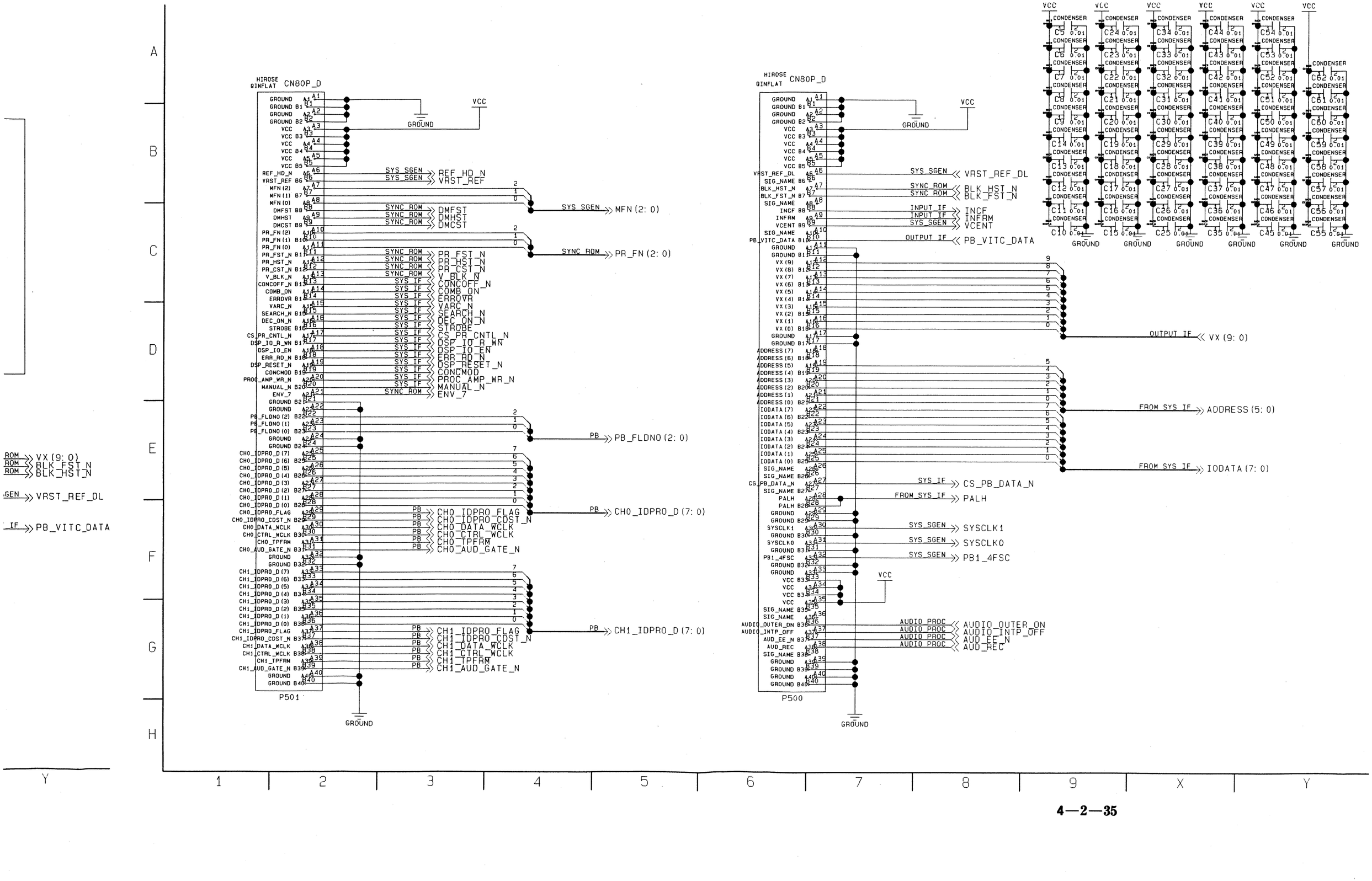

VIDEO PROCESS (M SUB 2 3/19) PB MEMORY OVERALL SCHEMATIC DIAGRAM

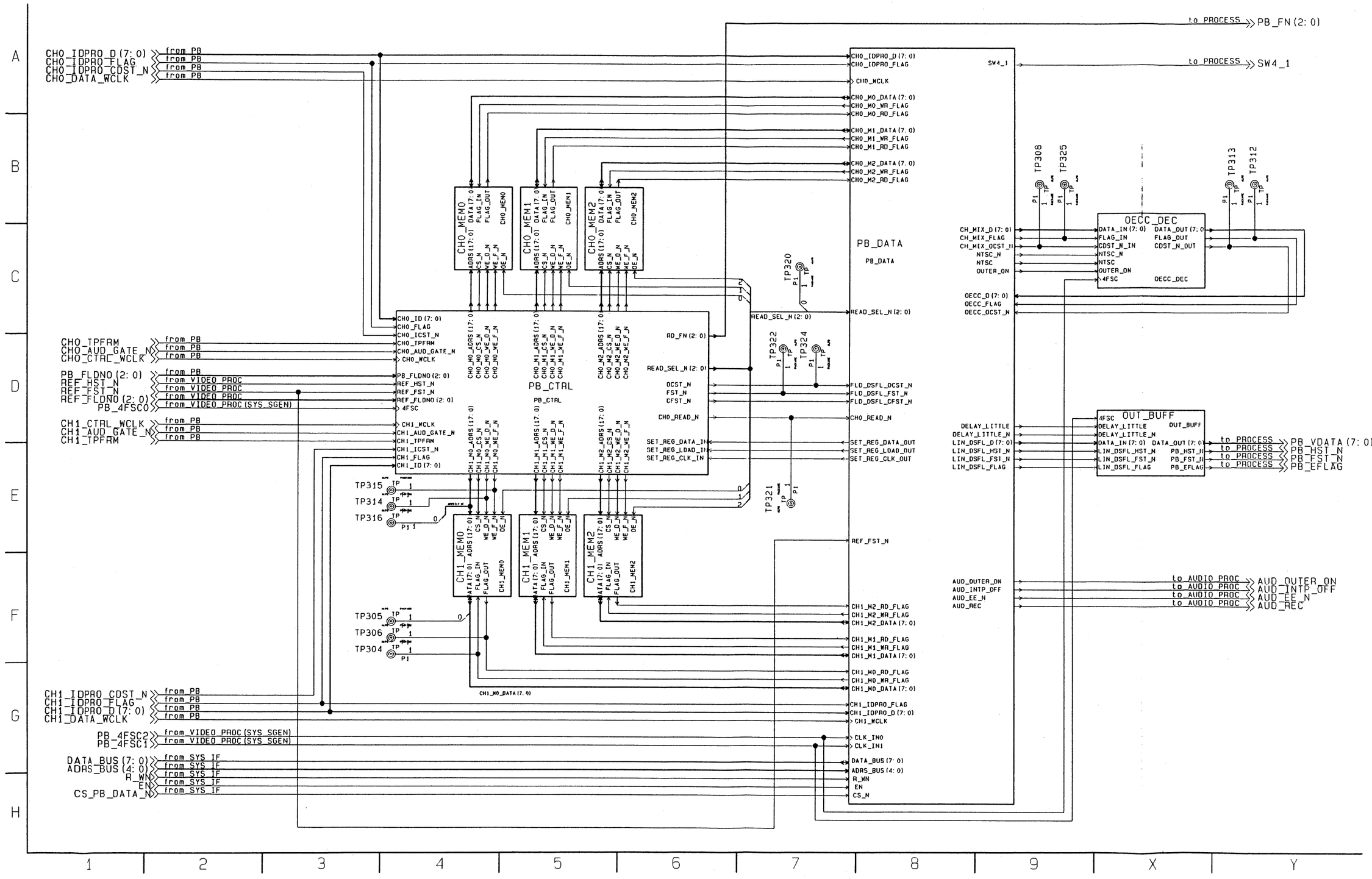

REVERSE SIDE

VIDEO PROCESS (M SUB 2 4/19) PB MEMORY/PLAYBACK CONTROL SCHEMATIC DIAGRAM

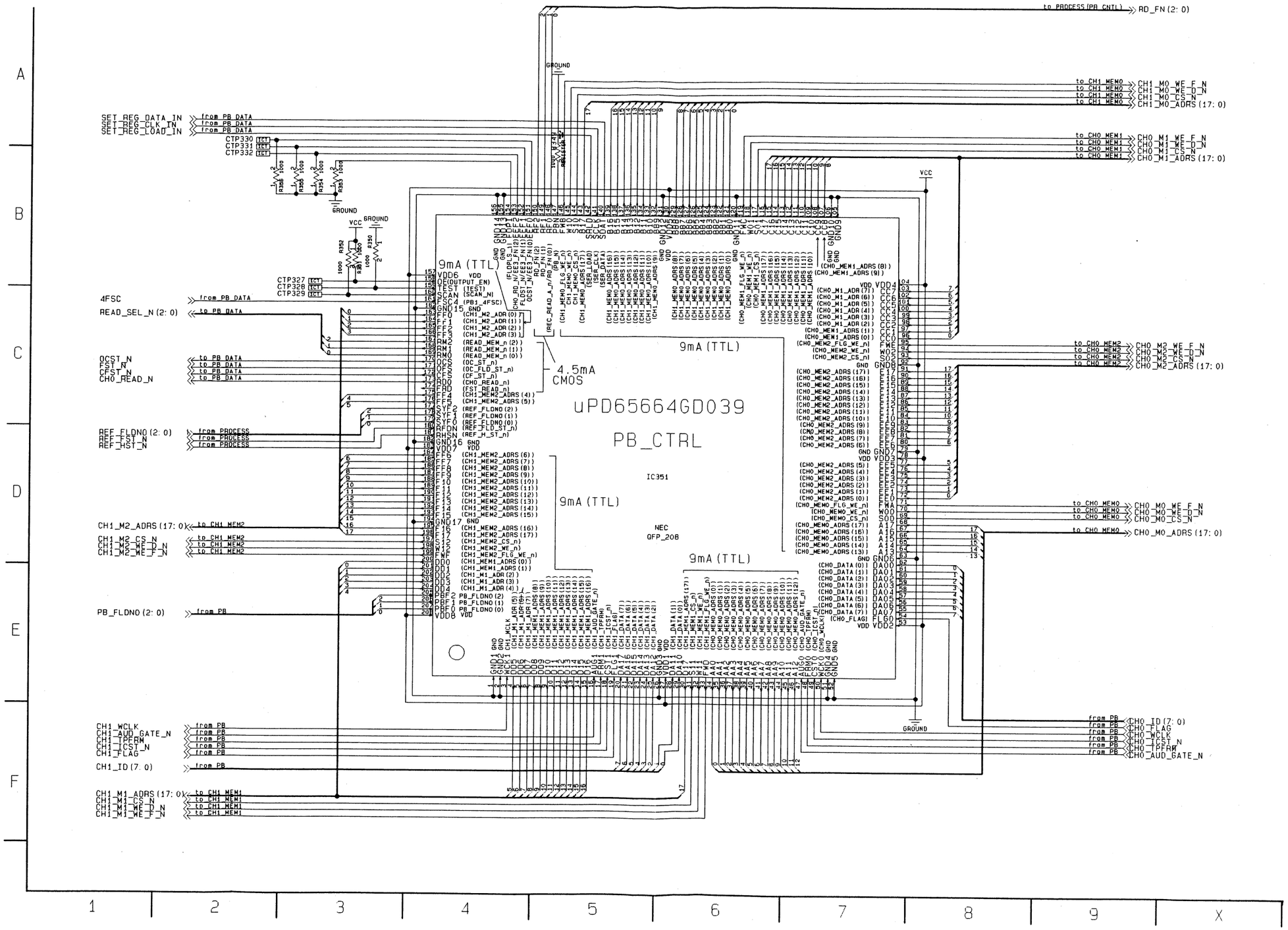

VIDEO PROCESS (M SUB 2 5/19) PB MEMORY/CH0 MEMORY 0 SCHEMATIC DIAGRAM

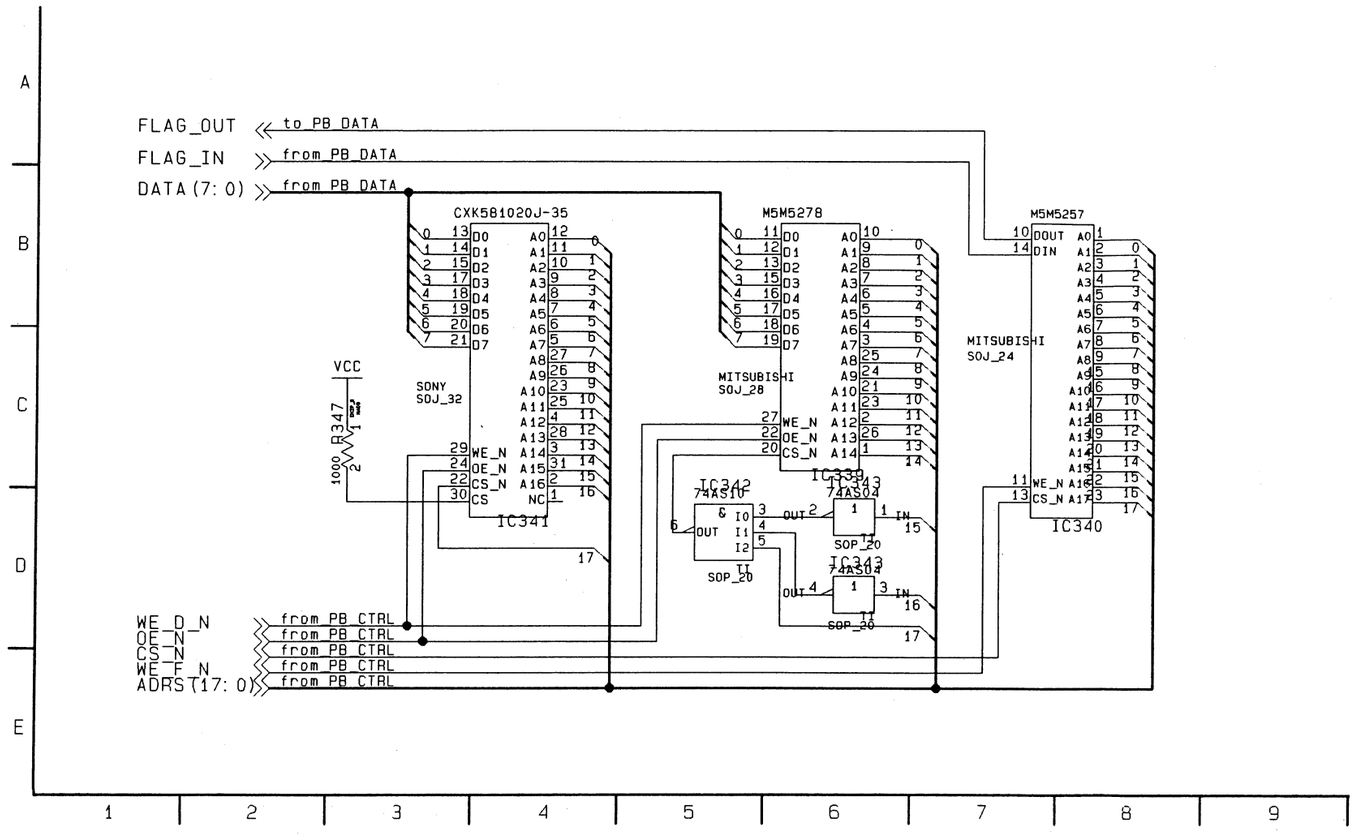

VIDEO PROCESS (M SUB 2 6/19) PB MEMORY/ SCHEMATIC DIAGRAM

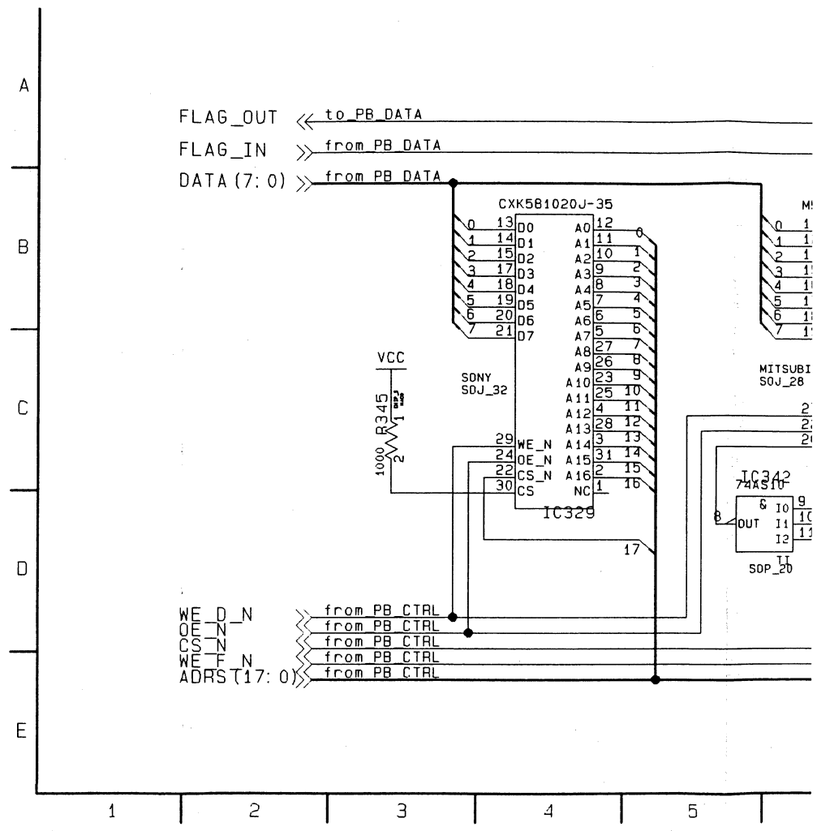

6/19) PB MEMORY/CH0 MEMORY 1

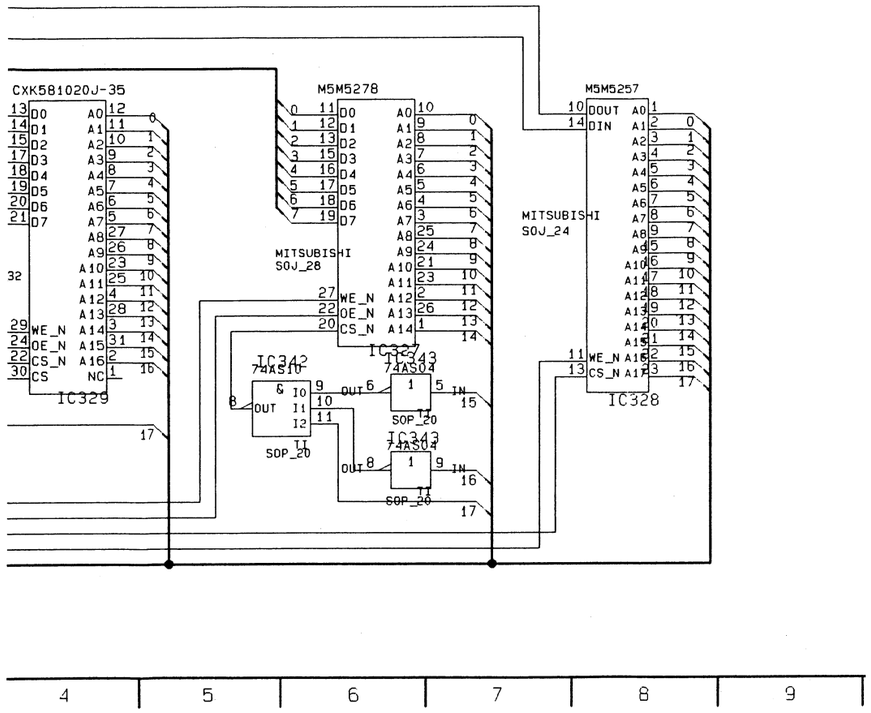

VIDEO PROCESS (M SUB 2 7/19) PB MEMORY/CH0 MEMORY 2 SCHEMATIC DIAGRAM

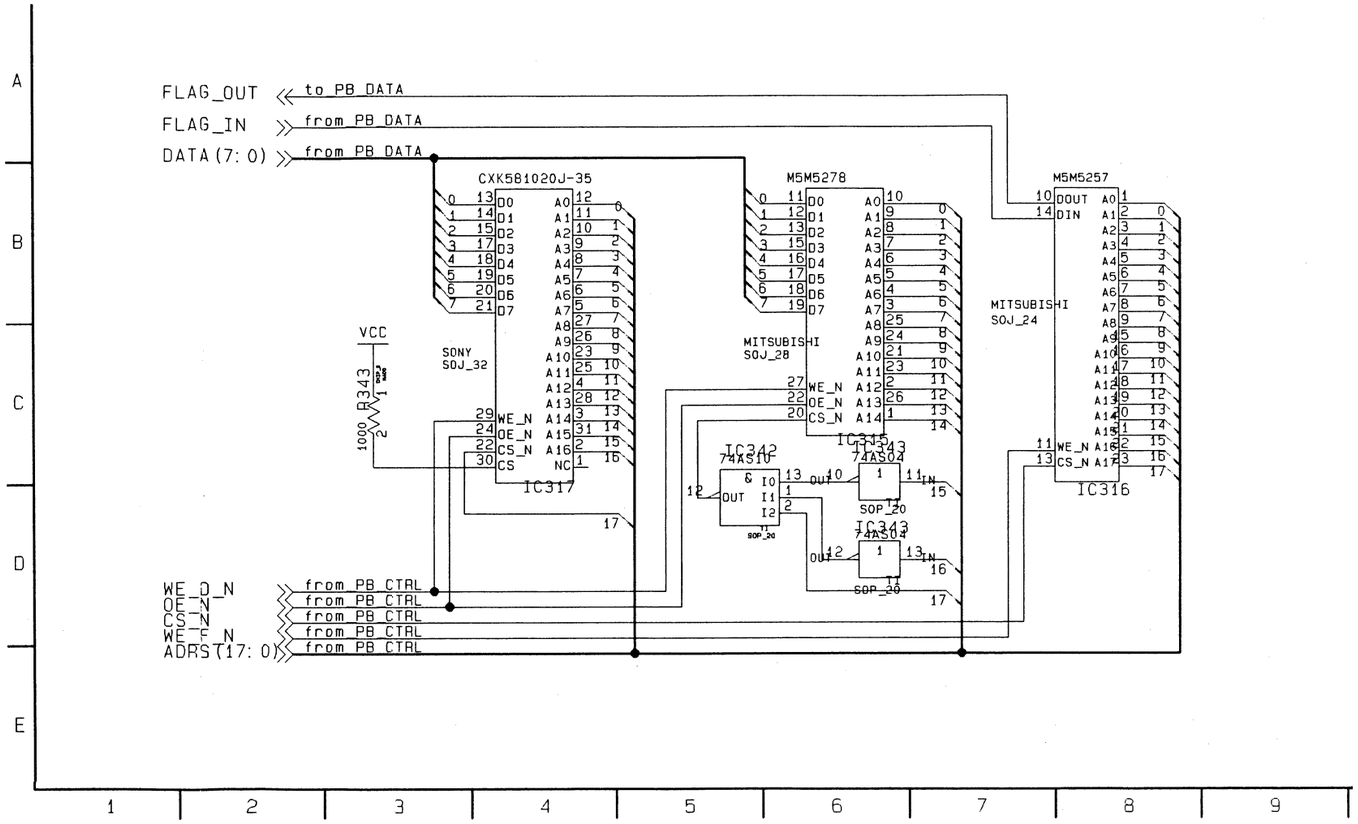

VIDEO PROCESS (M SUB 2 8/19) PB MEMORY/CH1 MEMORY 0 SCHEMATIC DIAGRAM

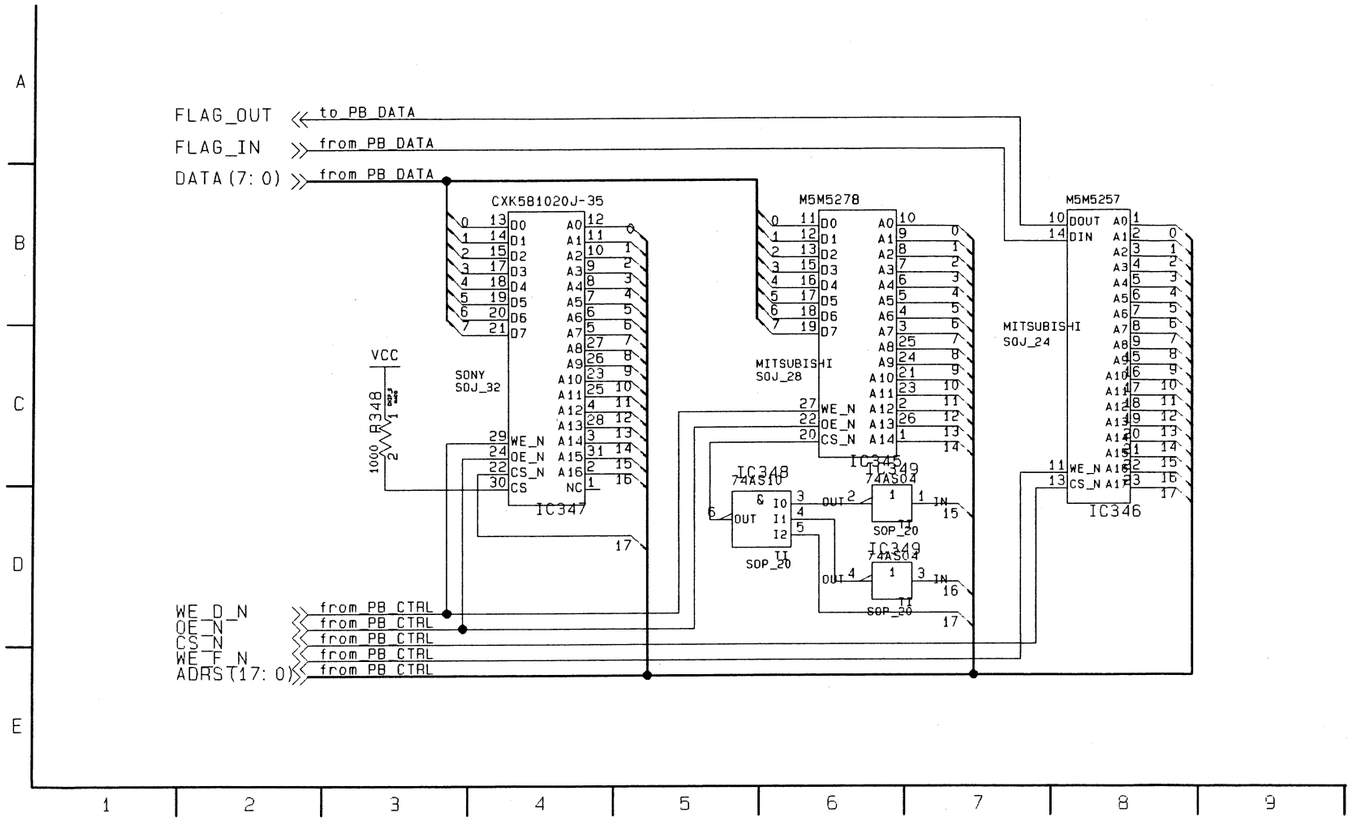

VIDEO PROCESS (M SUB 2 9/19) PB MEMORY/CH1 SCHEMATIC DIAGRAM

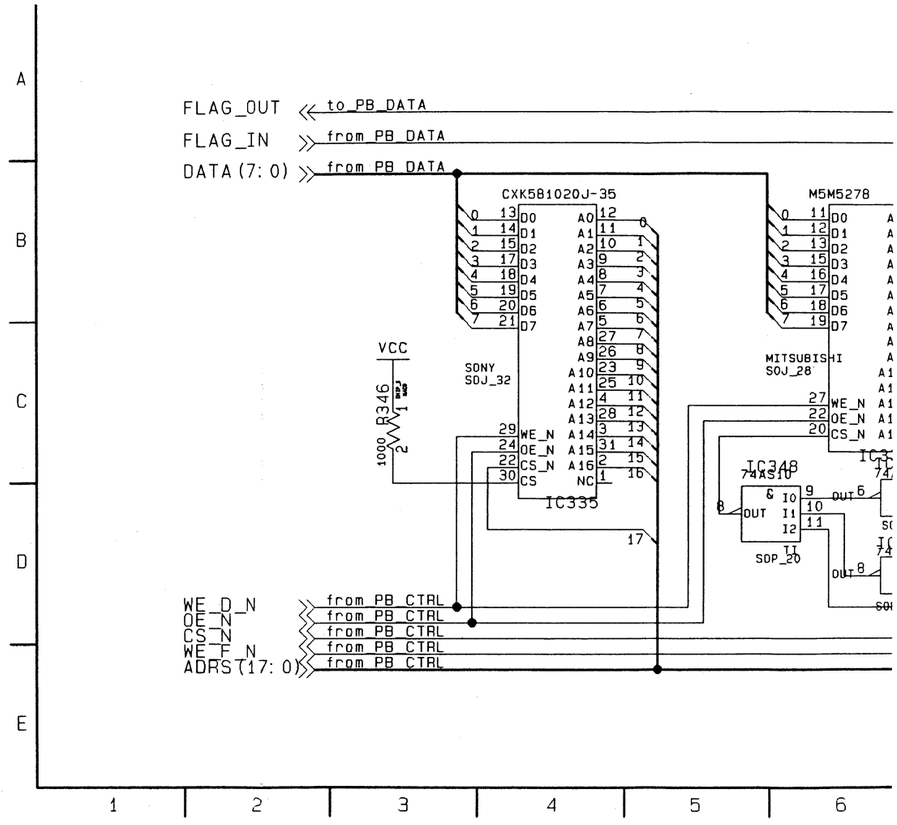

REVERSE SIDE

'B MEMORY/CH1 MEMORY 1

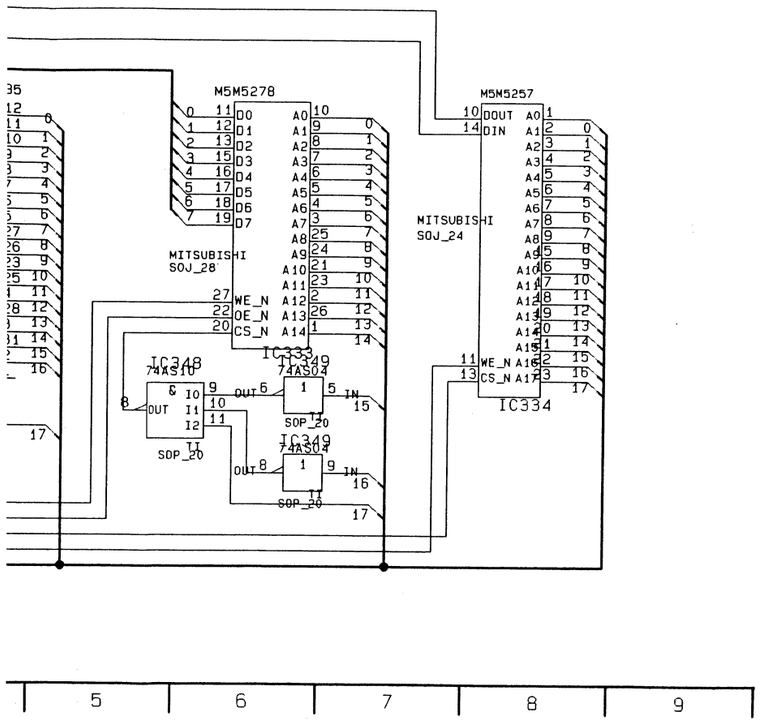

VIDEO PROCESS (M SUB 2 10/19) PB MEMORY/CH1 MEMORY 2 SCHEMATIC DIAGRAM

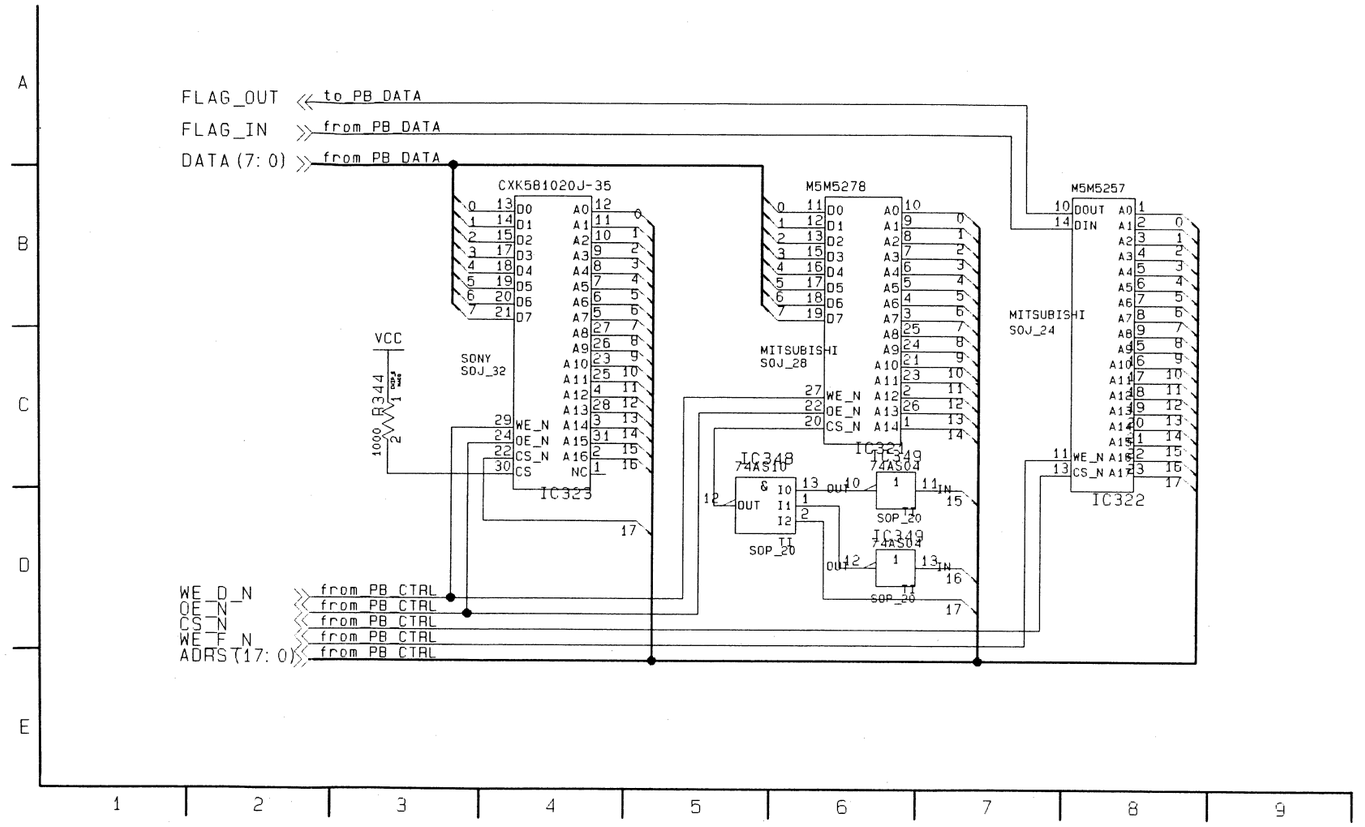

VIDEO PROCESS (M SUB 2 11/19) PB MEMORY/PB DATA SCHEMATIC DIAGRAM

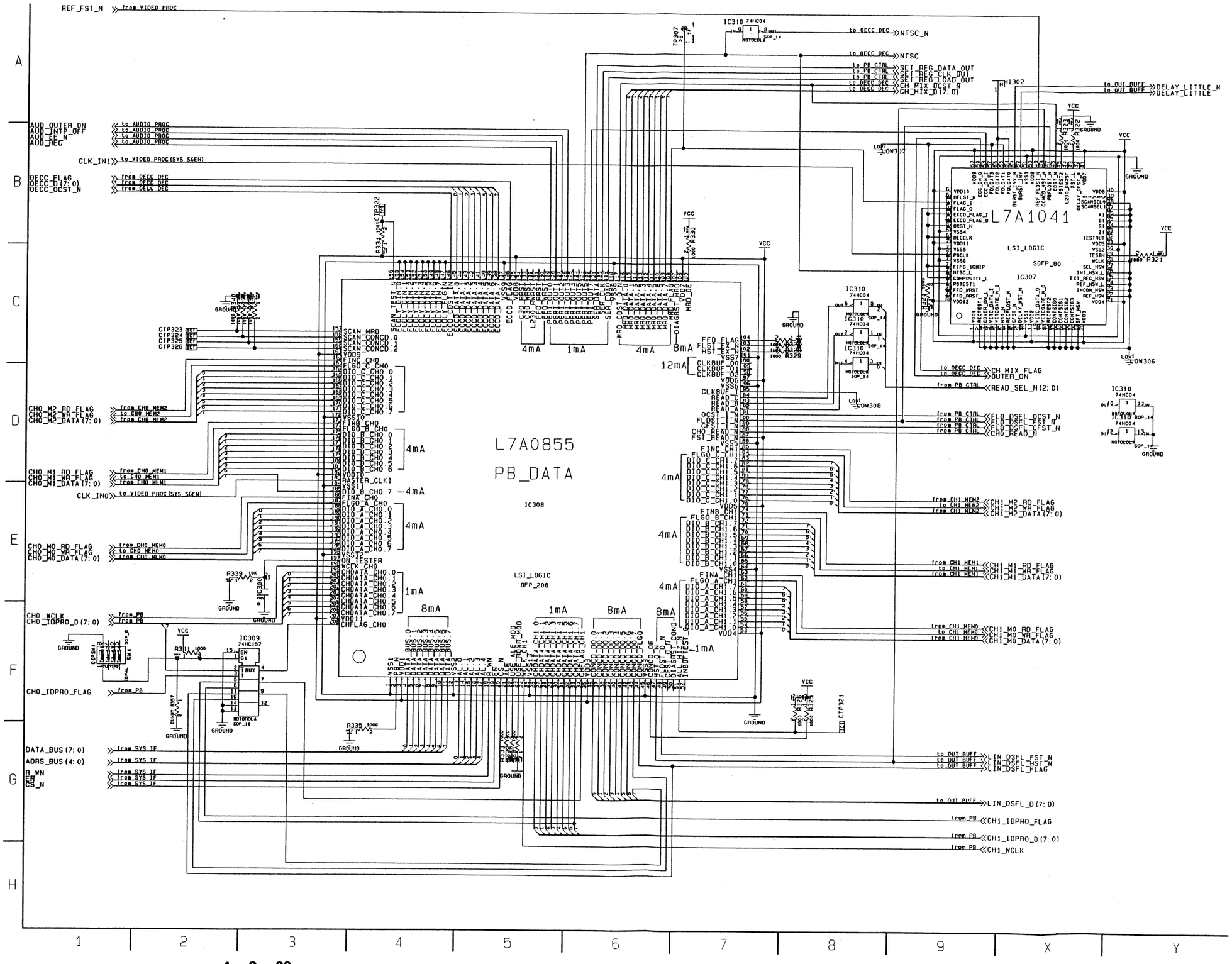

VIDEO PROCESS (M SUB 2 12/19) PB MEMORY/OECC DECODER SCHEMATIC DIAGRAM

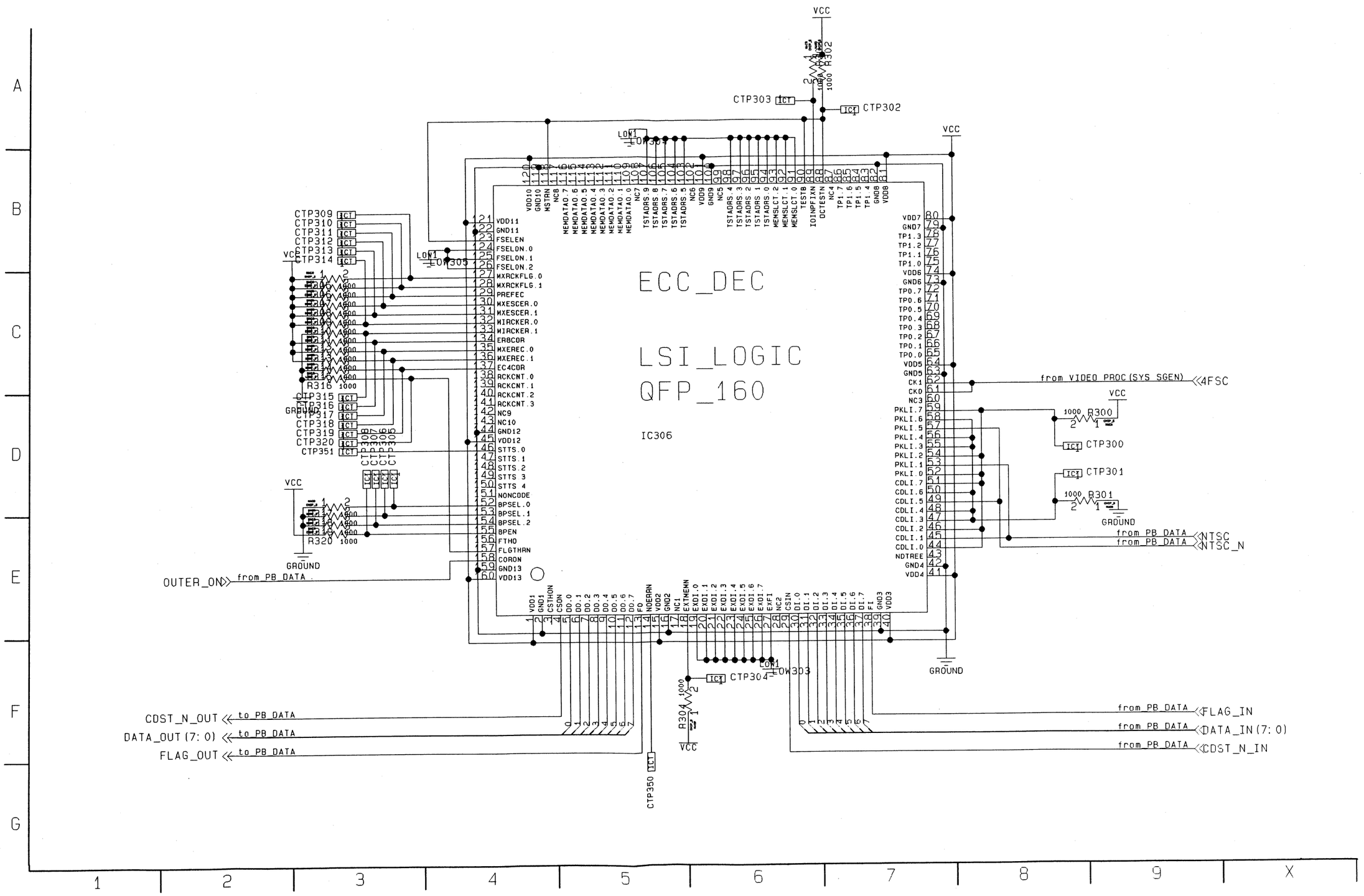

VIDEO PROCESS (M SUB 2 13/19) OUTPUT BUFFER SCHEMATIC DIAGRAM

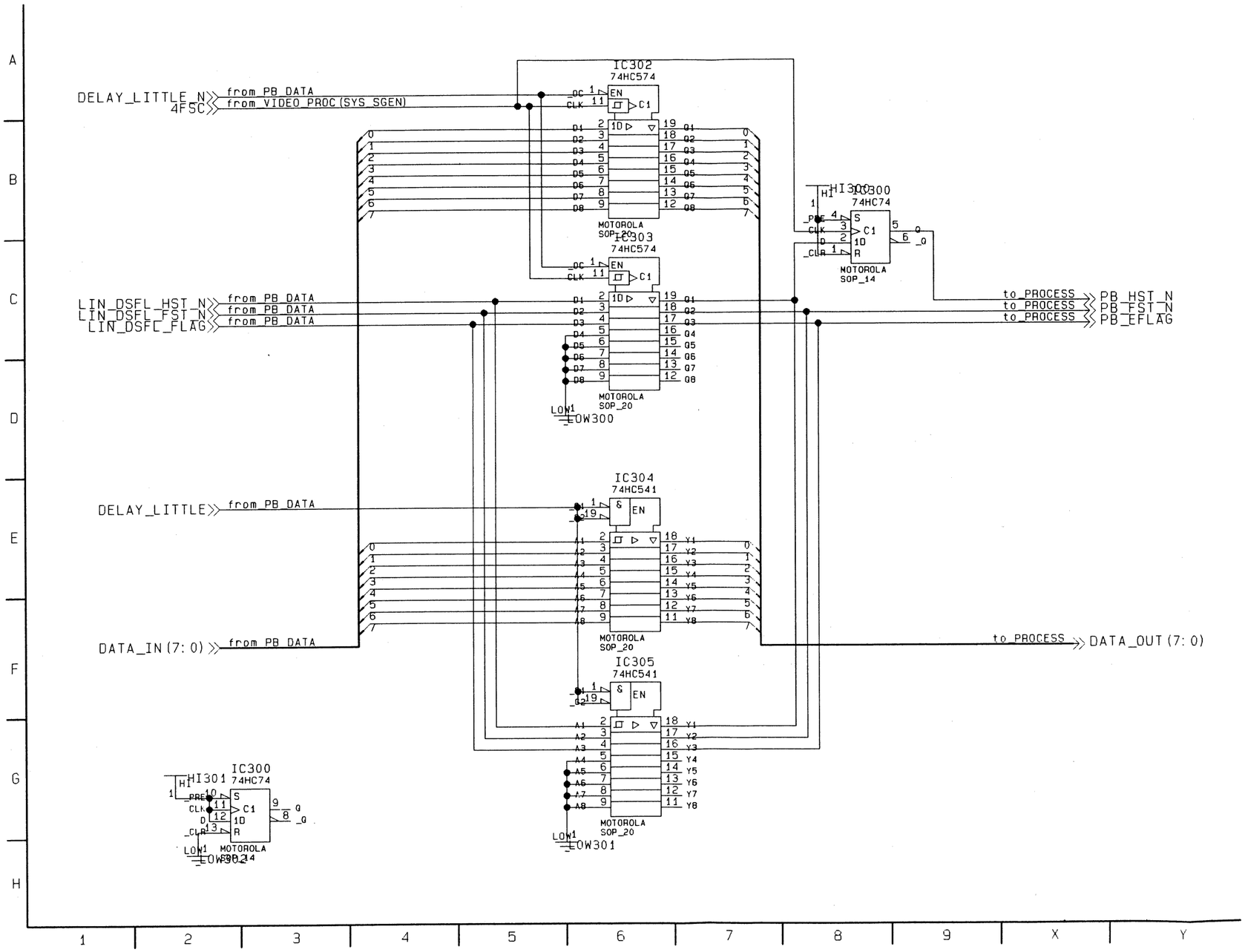

REVERSE SIDE

VIDEO PROCESS (M SUB 2 14/19) PROCESS OVERALL SCHEMATIC DIAGRAM

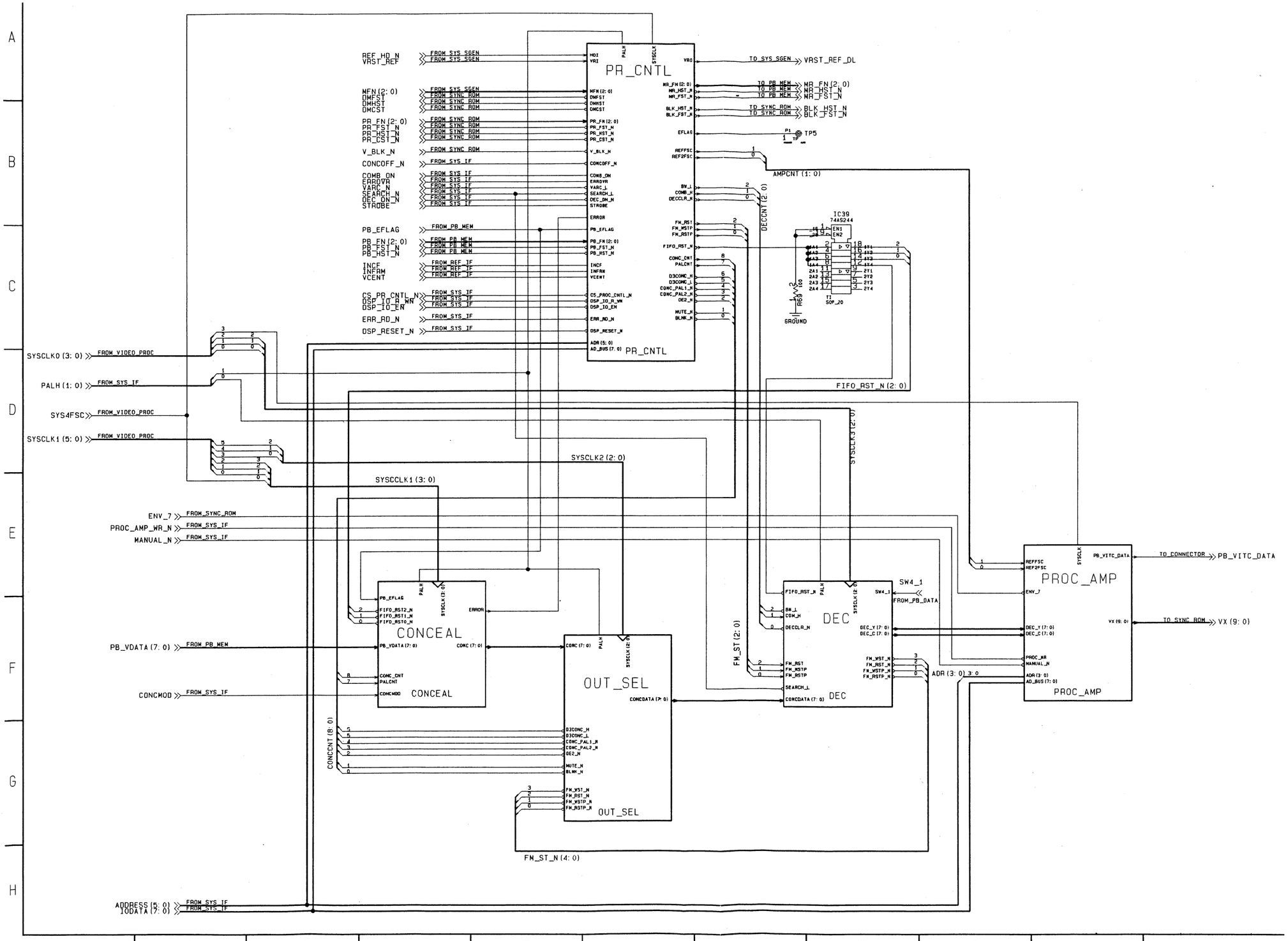

VIDEO PROCESS (M SUB 2 15/19) PROCESS/PROCESS CONTROL SCHEMATIC DIAGRAM

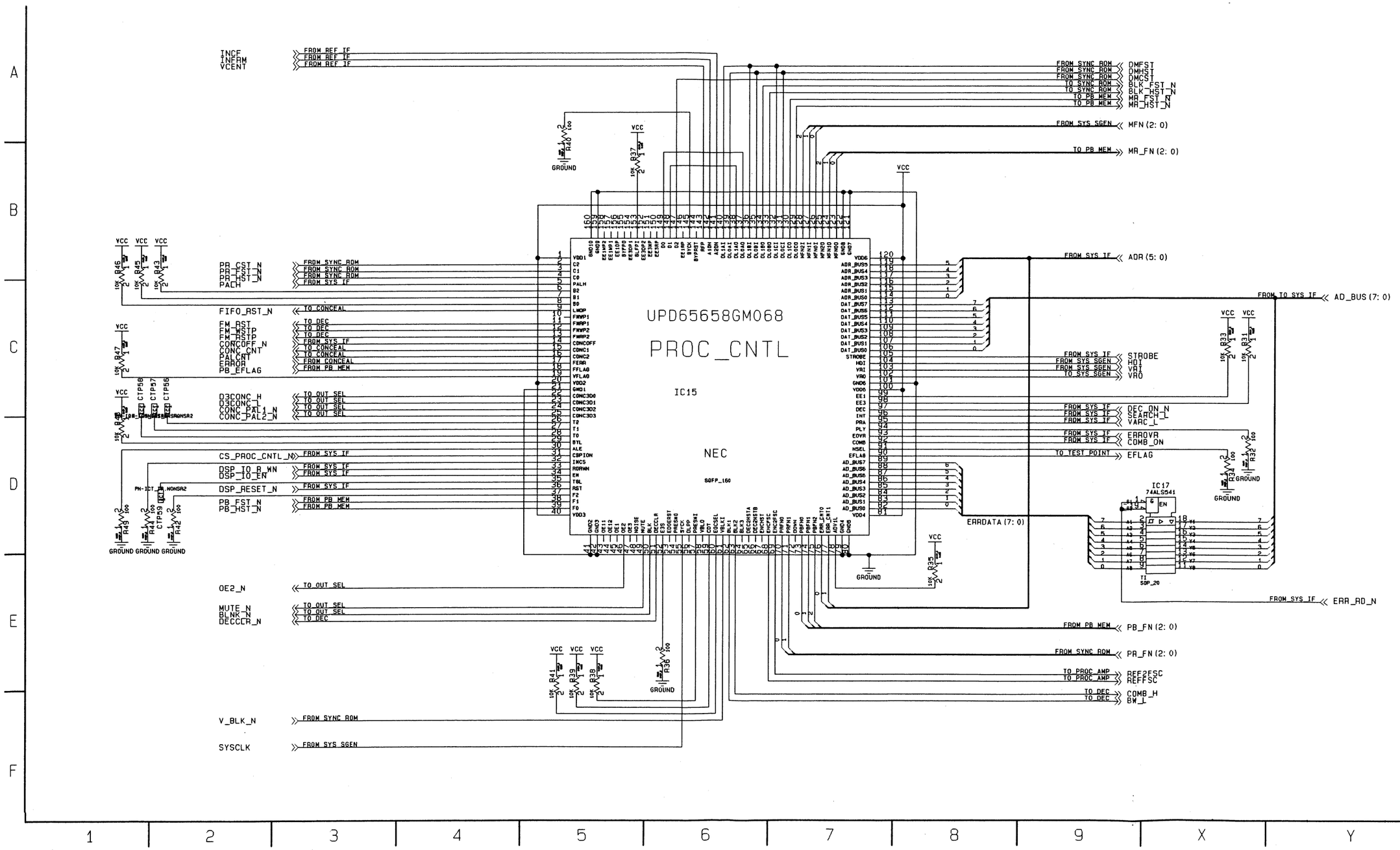

VIDEO PROCESS (M SUB 2 16/19) PROCESS/CONCEAL SCHEMATIC DIAGRAM

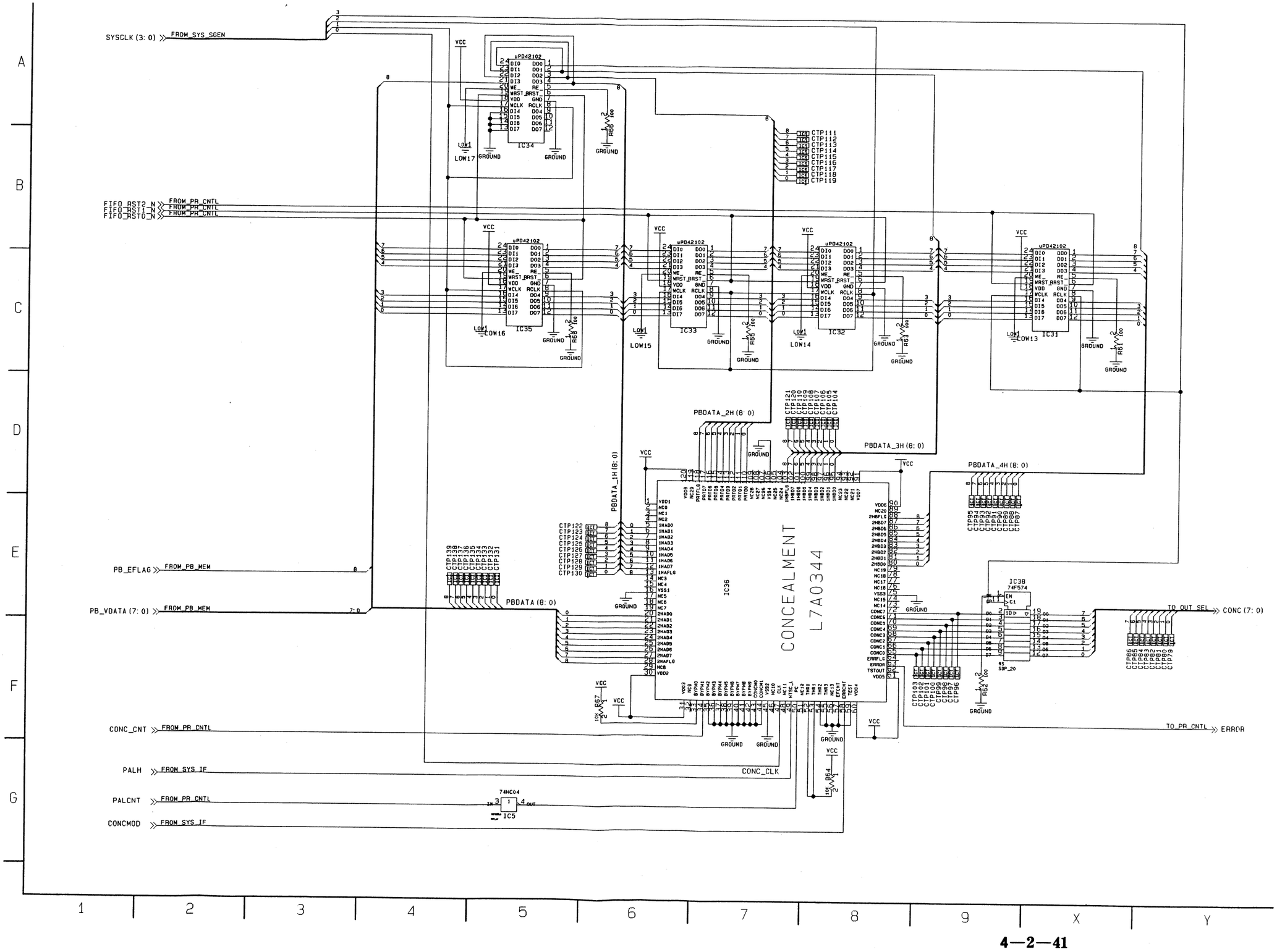

VIDEO PROCESS (M SUB 2 17/19) PROCESS/OUTPUT SELECTOR SCHEMATIC DIAGRAM

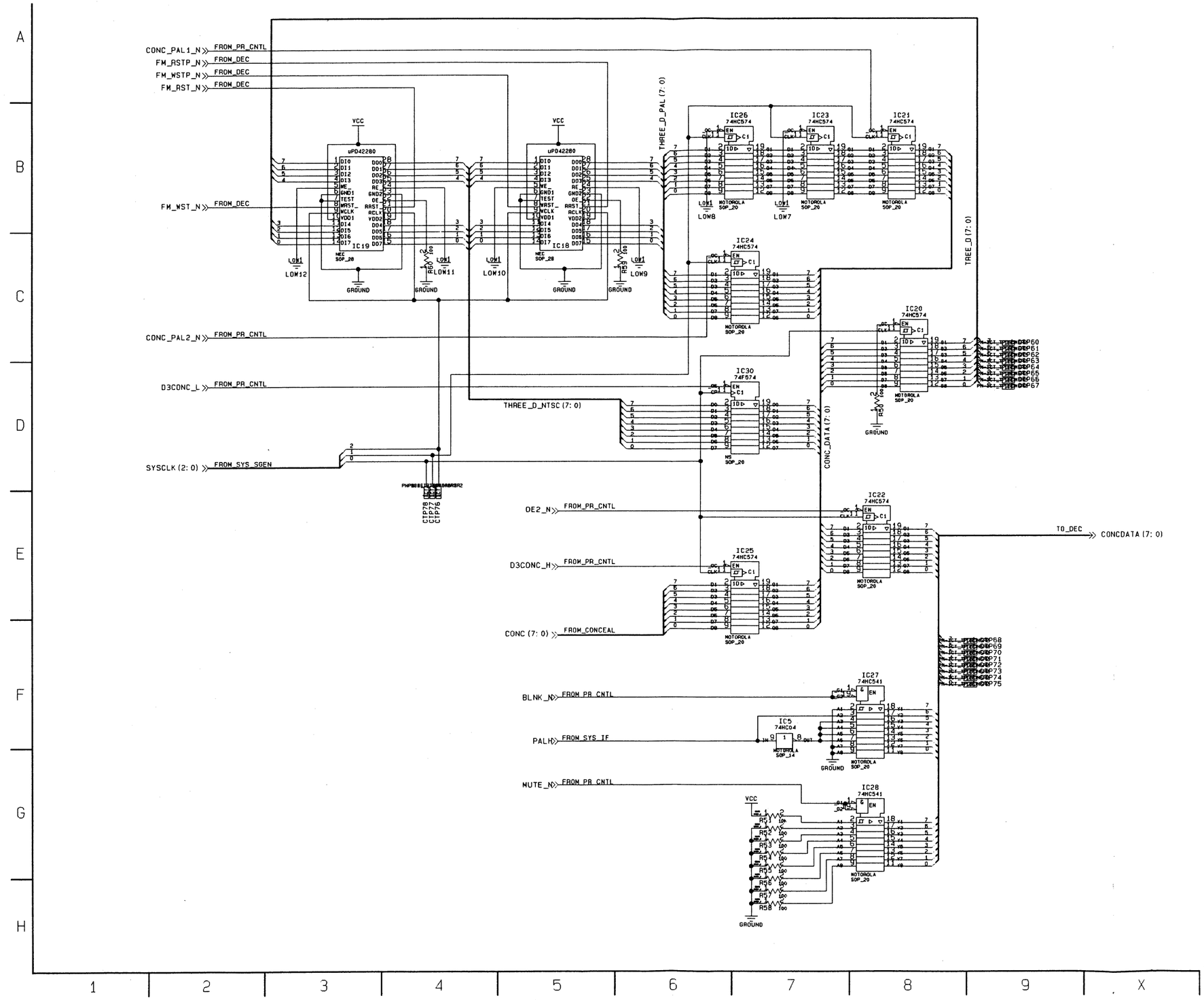

REVERSE SIDE

VIDEO PROCESS (M SUB 2 18/19) PROCESS/DECODER SCHEMATIC DIAGRAM

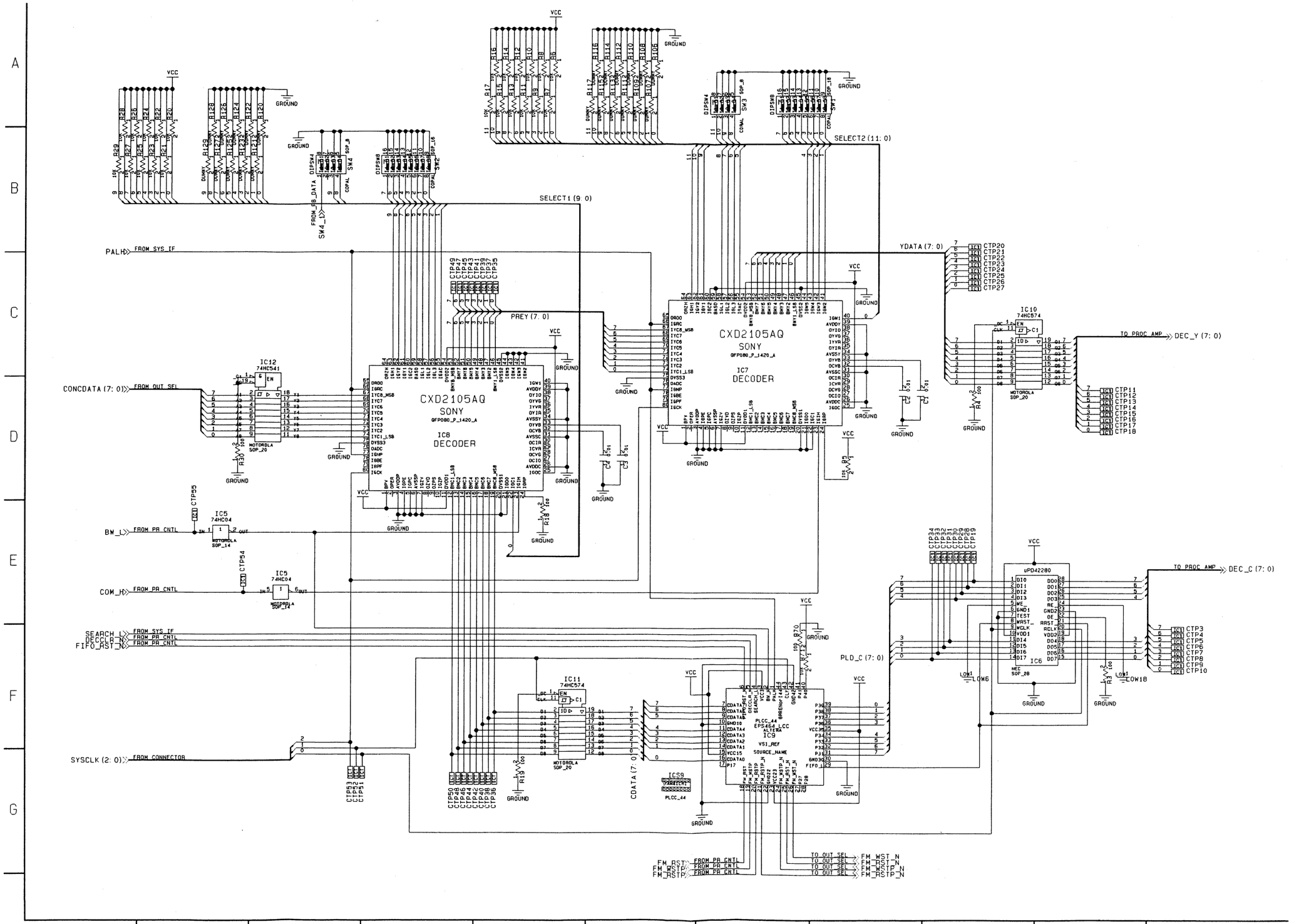

VIDEO PROCESS (M SUB 2 19/19) PROCESS/PROCESS AMP SCHEMATIC DIAGRAM

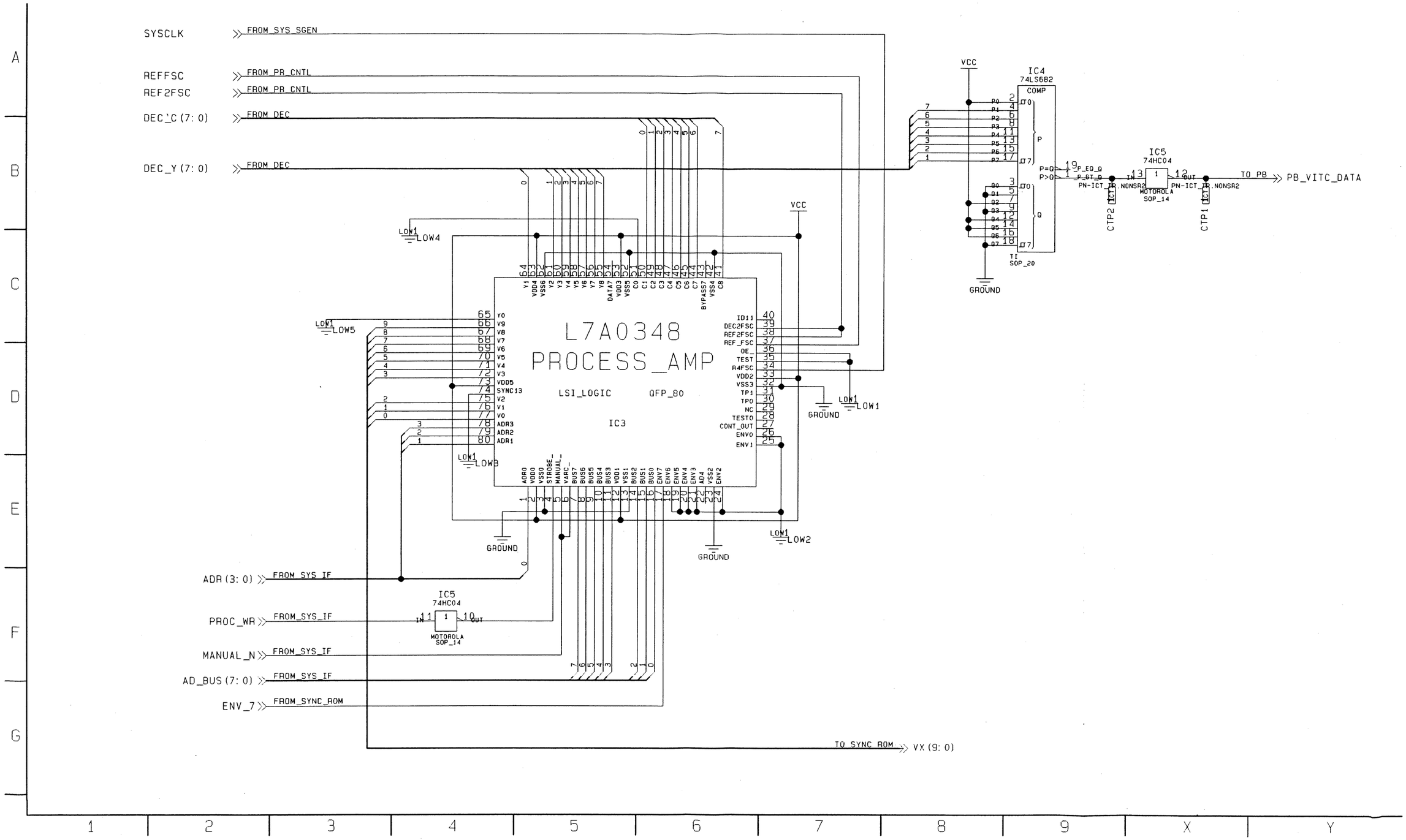

4—2—43

DRIVE (S0 1/11) CONNECTOR SCHEMATIC DIAGRAM

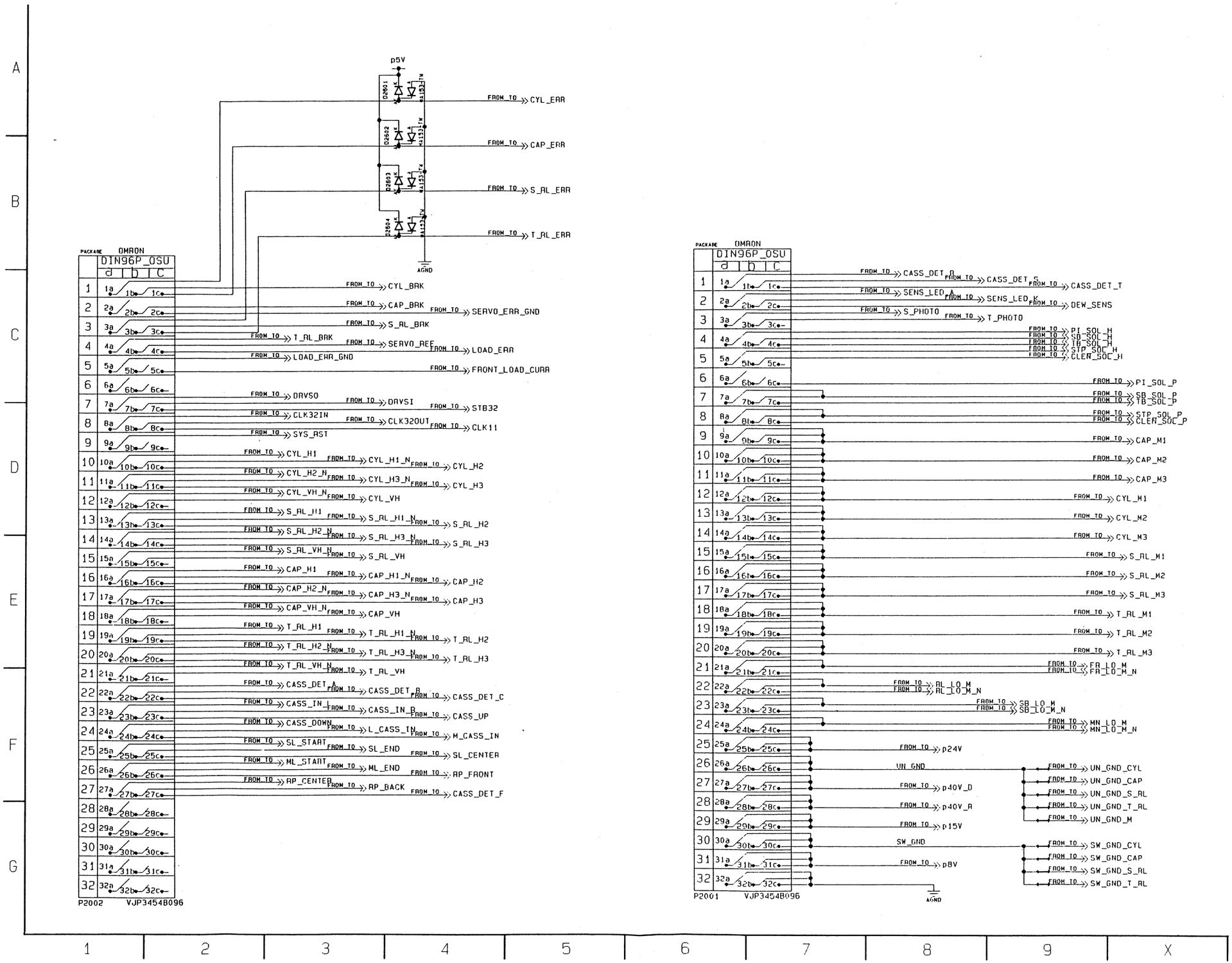

DRIVE (S0 2/11) SOLENOID DRIVE SCHEMATIC DIAGRAM

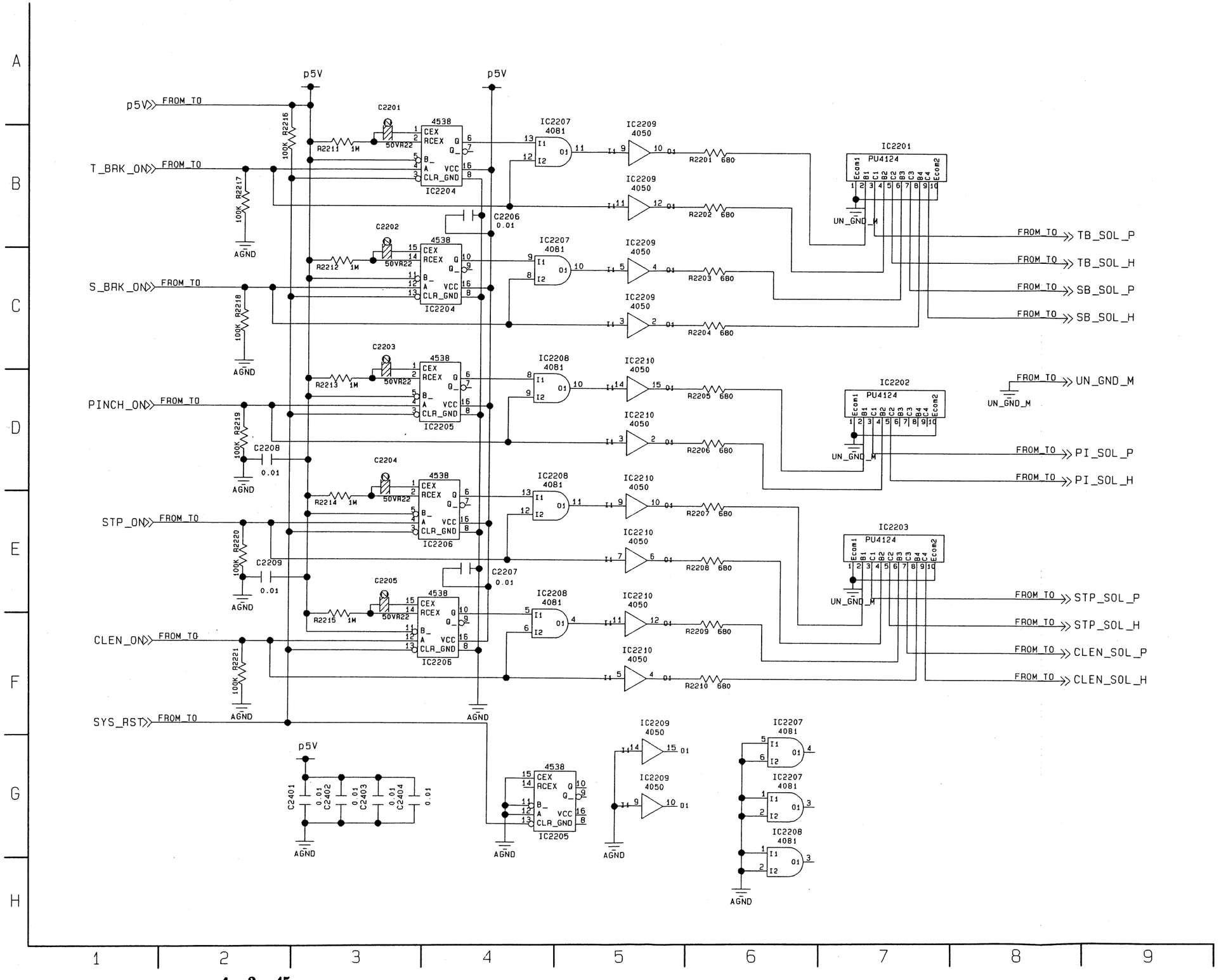

DRIVE (S0 3/11) CAPSTAN DRIVE SCHEMATIC DIAGRAM

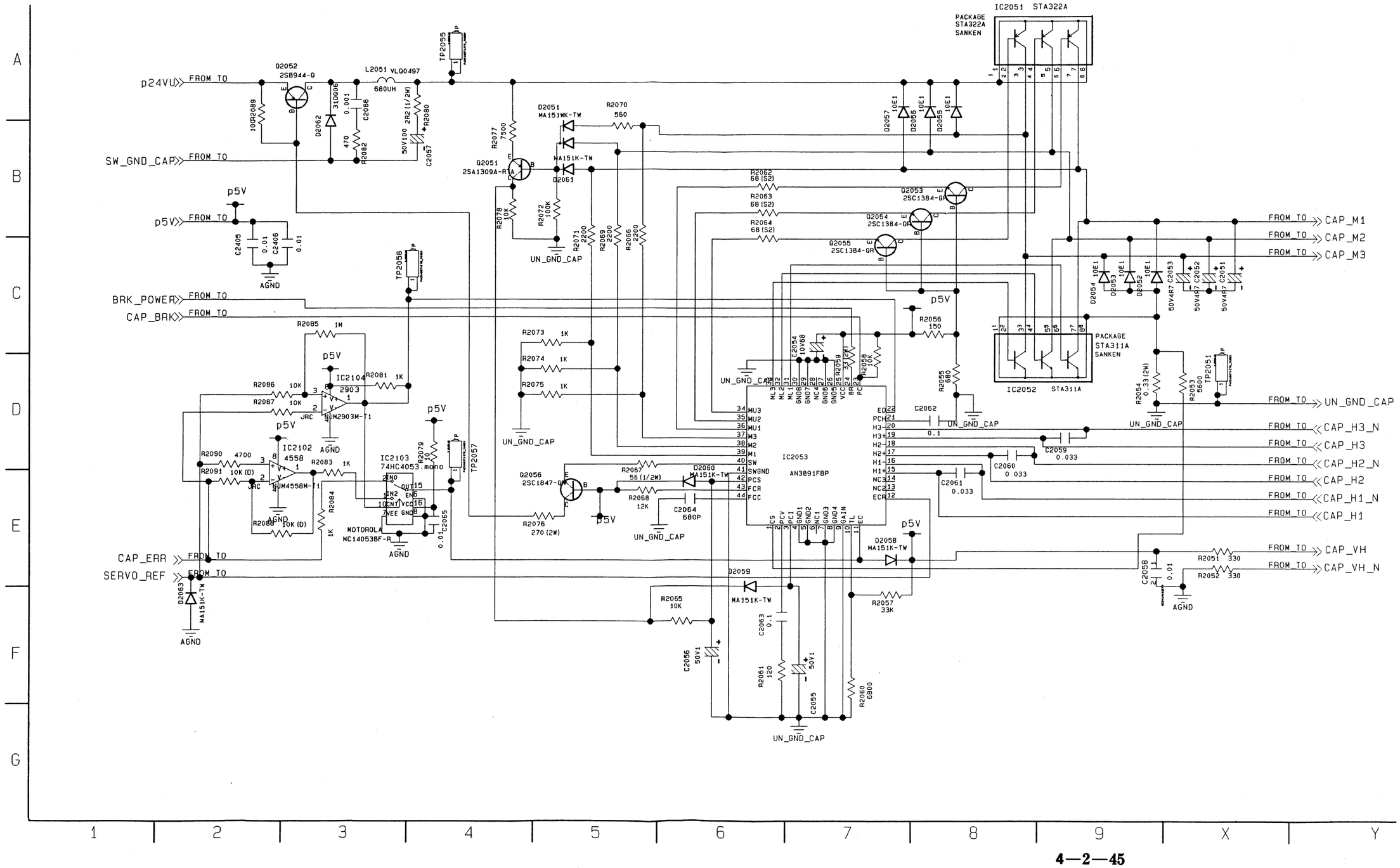

DRIVE (S0 4/11) DRUM DRIVE SCHEMATIC DIAGRAM

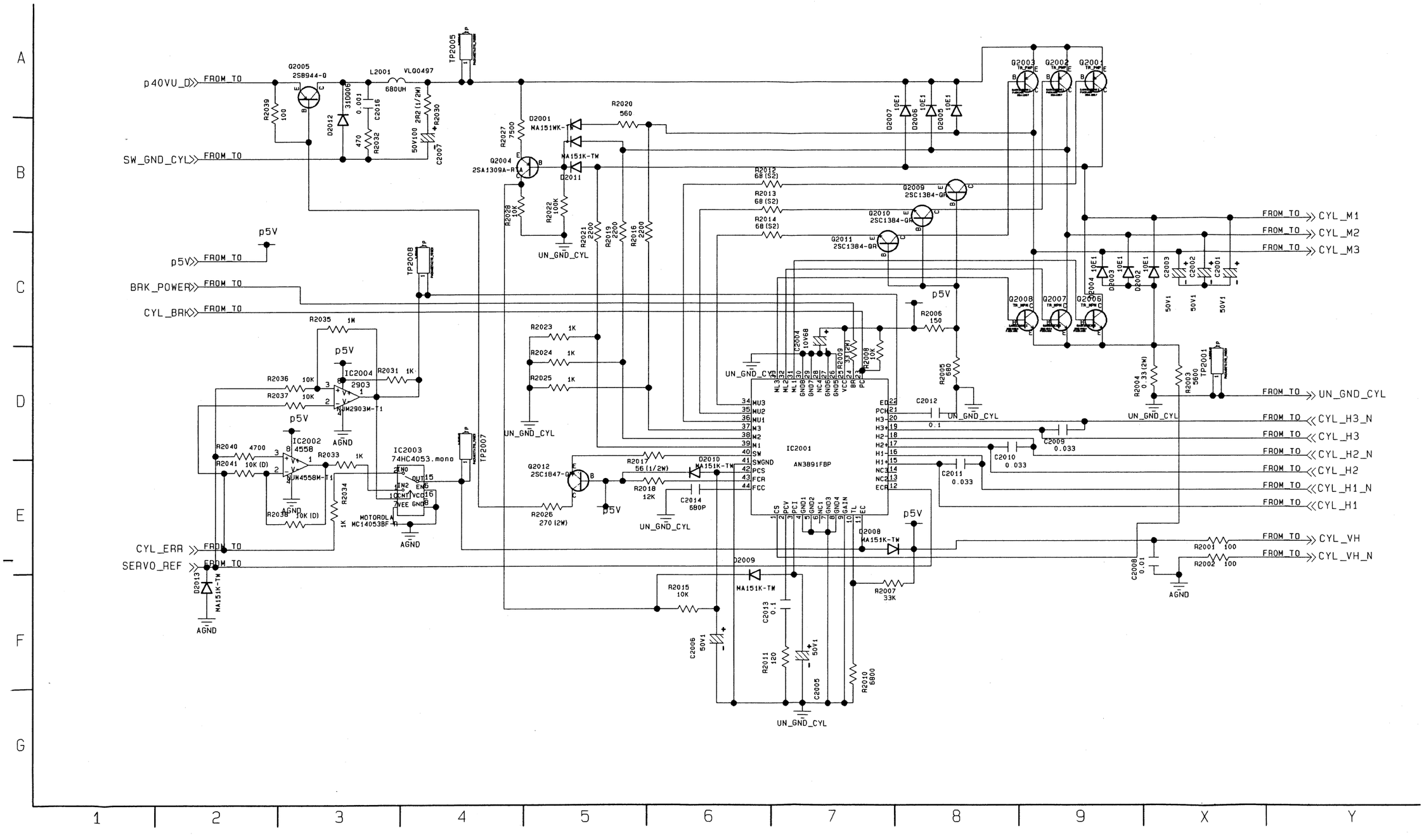

REVERSE SIDE

DRIVE (S0 2/11, 3/11)

DRIVE (S0 5/11) S REEL DRIVE SCHEMATIC DIAGRAM

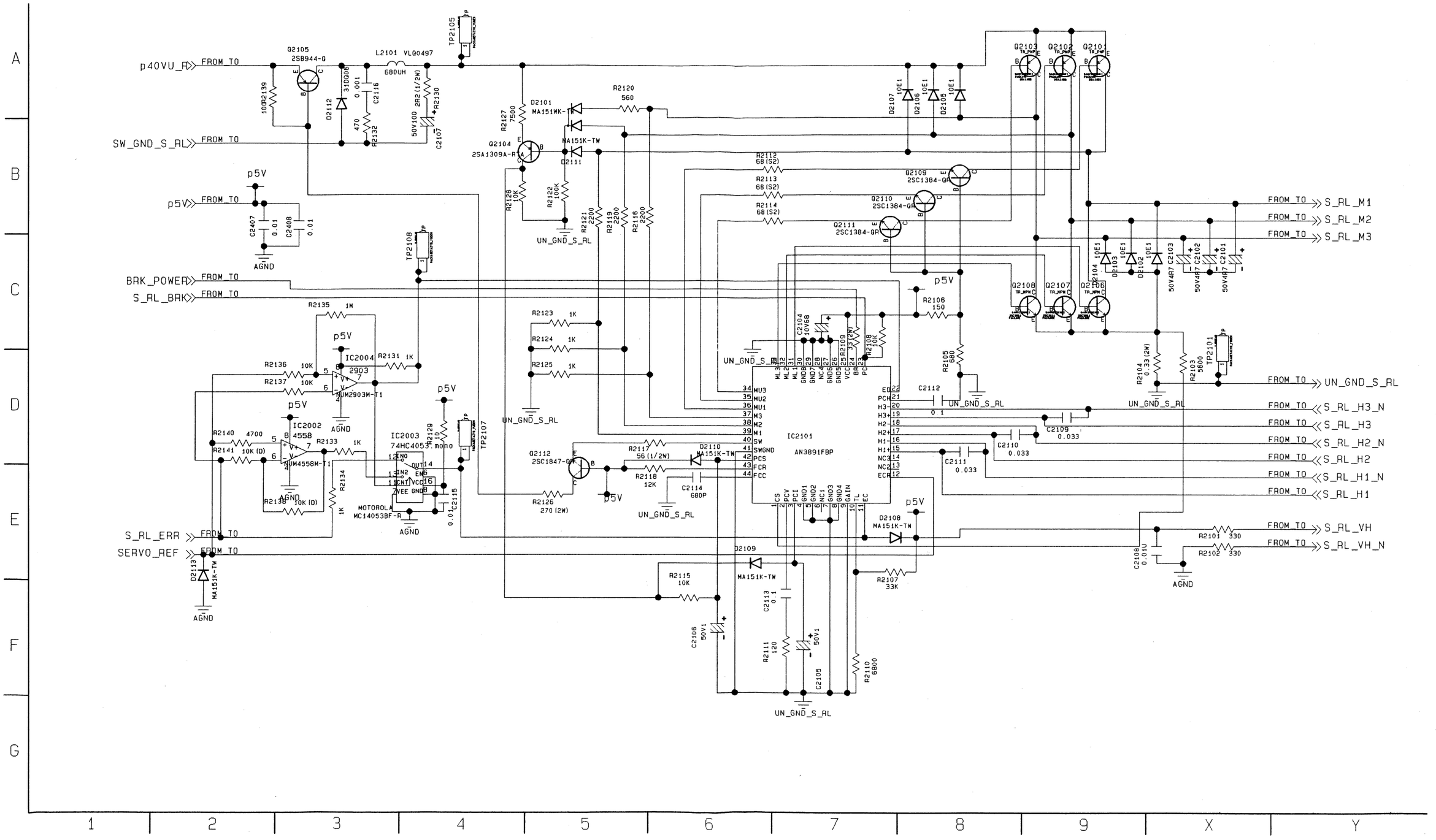

DRIVE (S0 6/11) T REEL DRIVE SCHEMATIC DIAGRAM

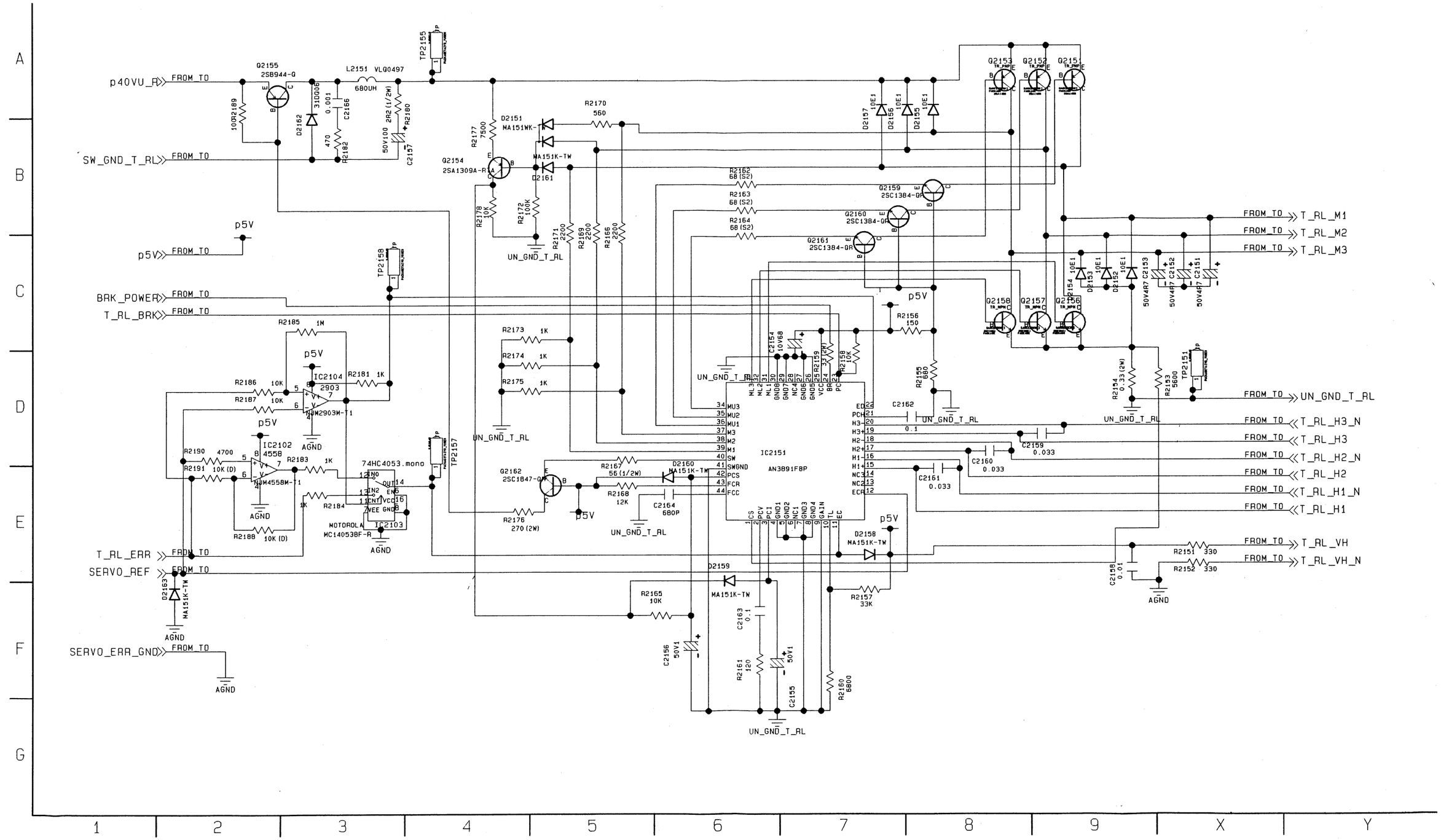

DRIVE (S0 7/11) MAIN SUB DRIVE SCHEMATIC DIAGRAM

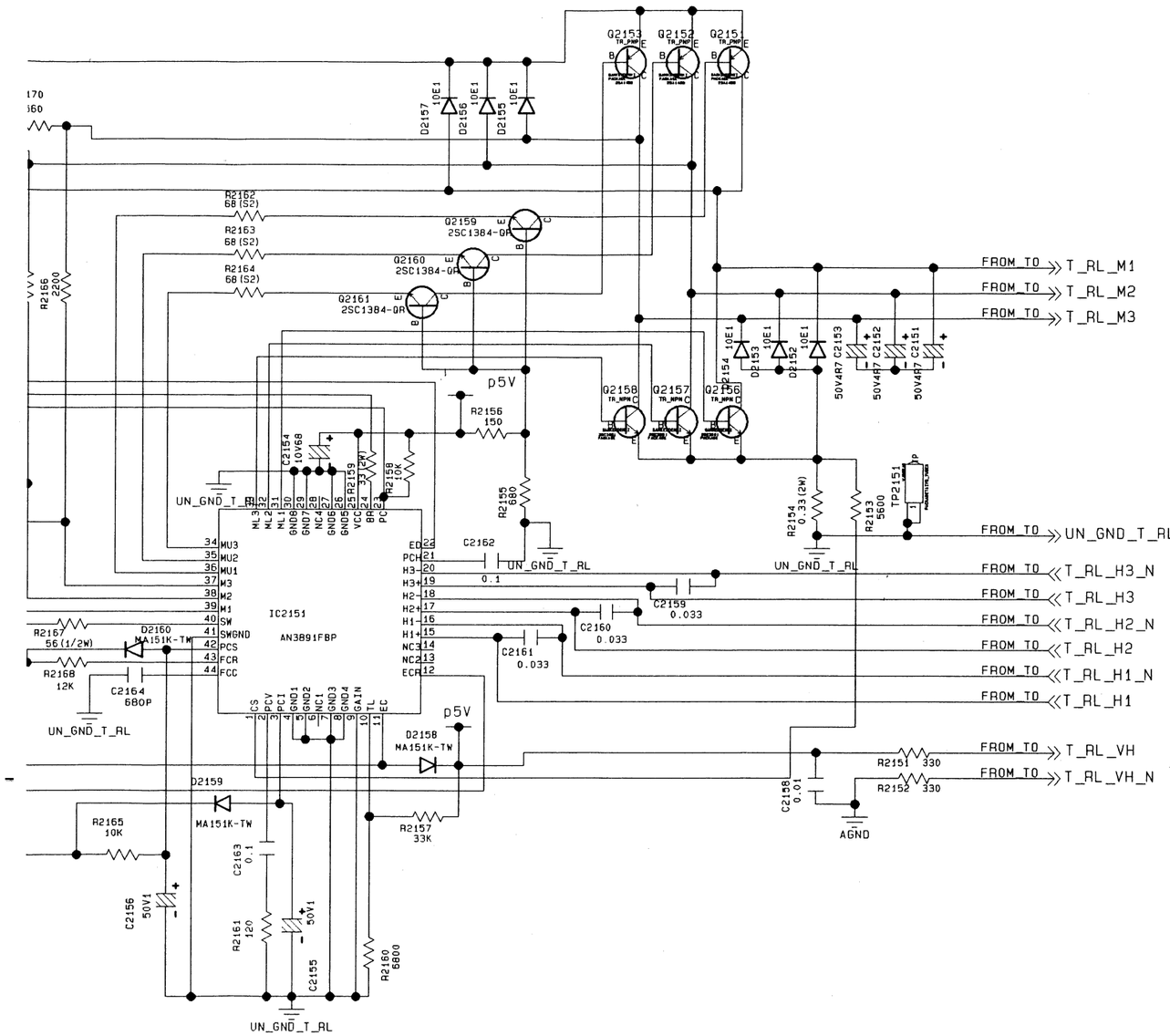

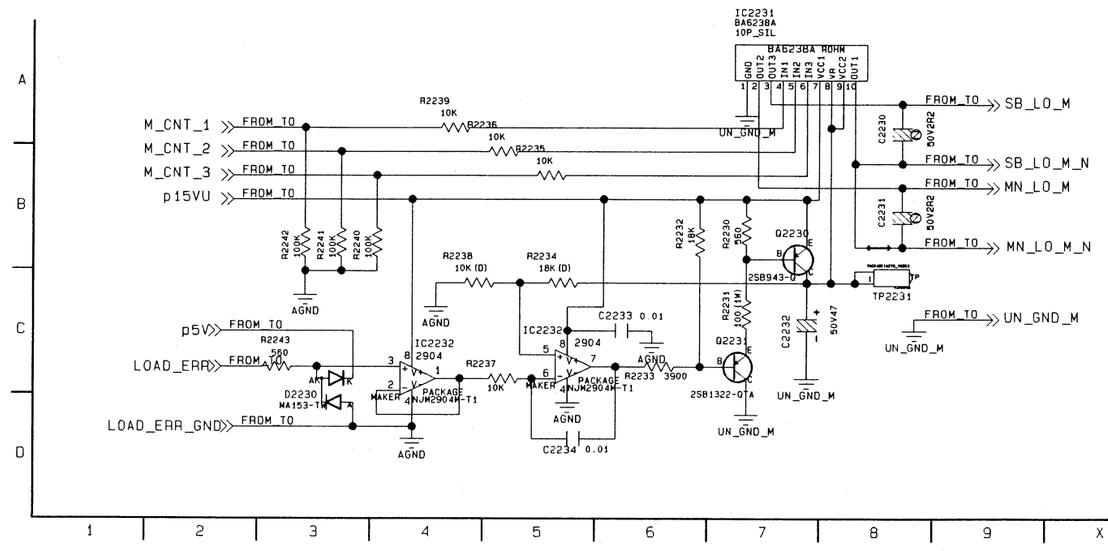

REVERSE SIDE

DRIVE (S0 8/11, 9/11)

DRIVE (S0 8/11) GARAGE DRIVE SCHEMATIC DIAGRAM

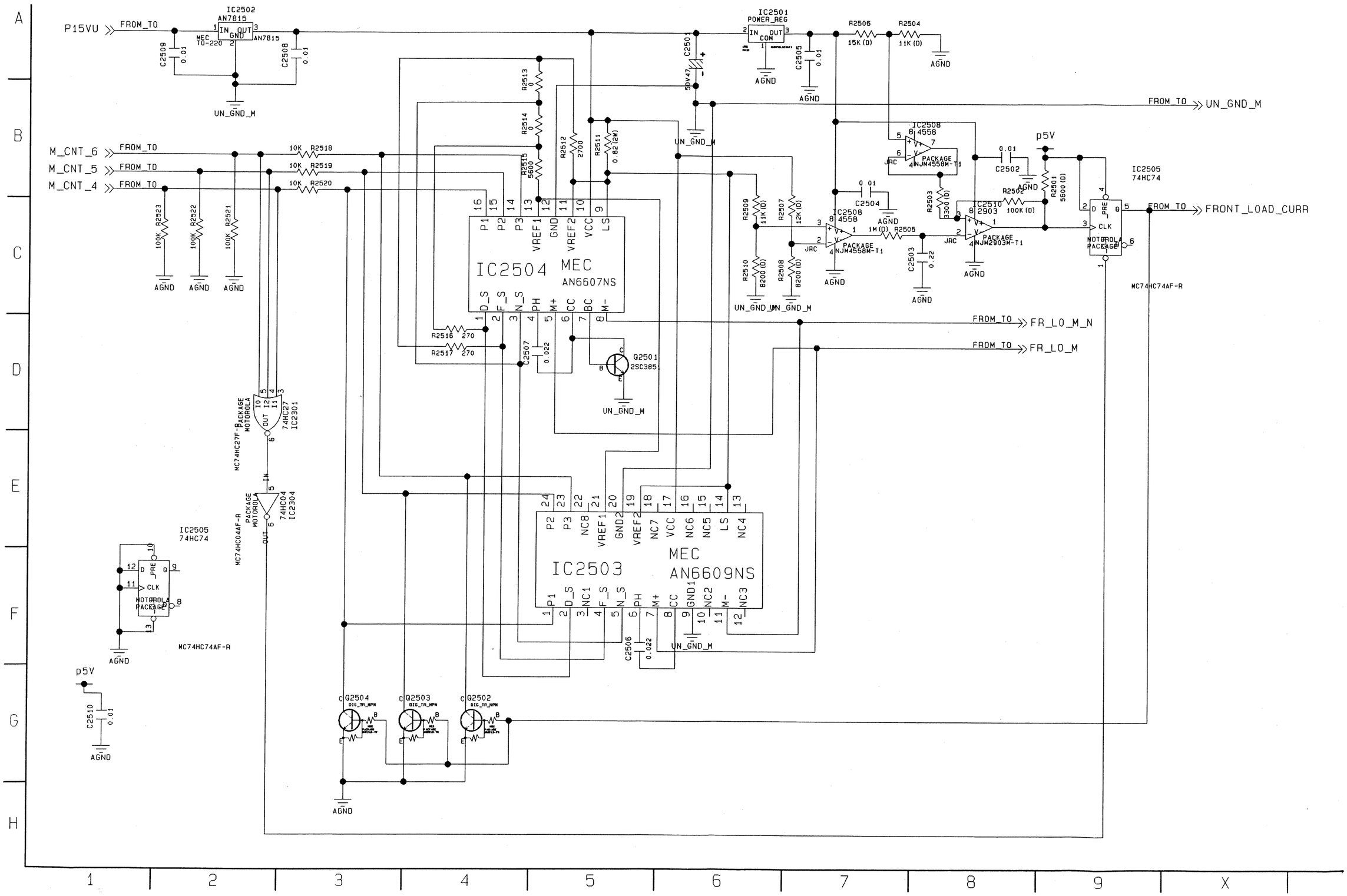

DRIVE (S0 9/11) MECHANISM DRIVE SCHEMATIC DIAGRAM

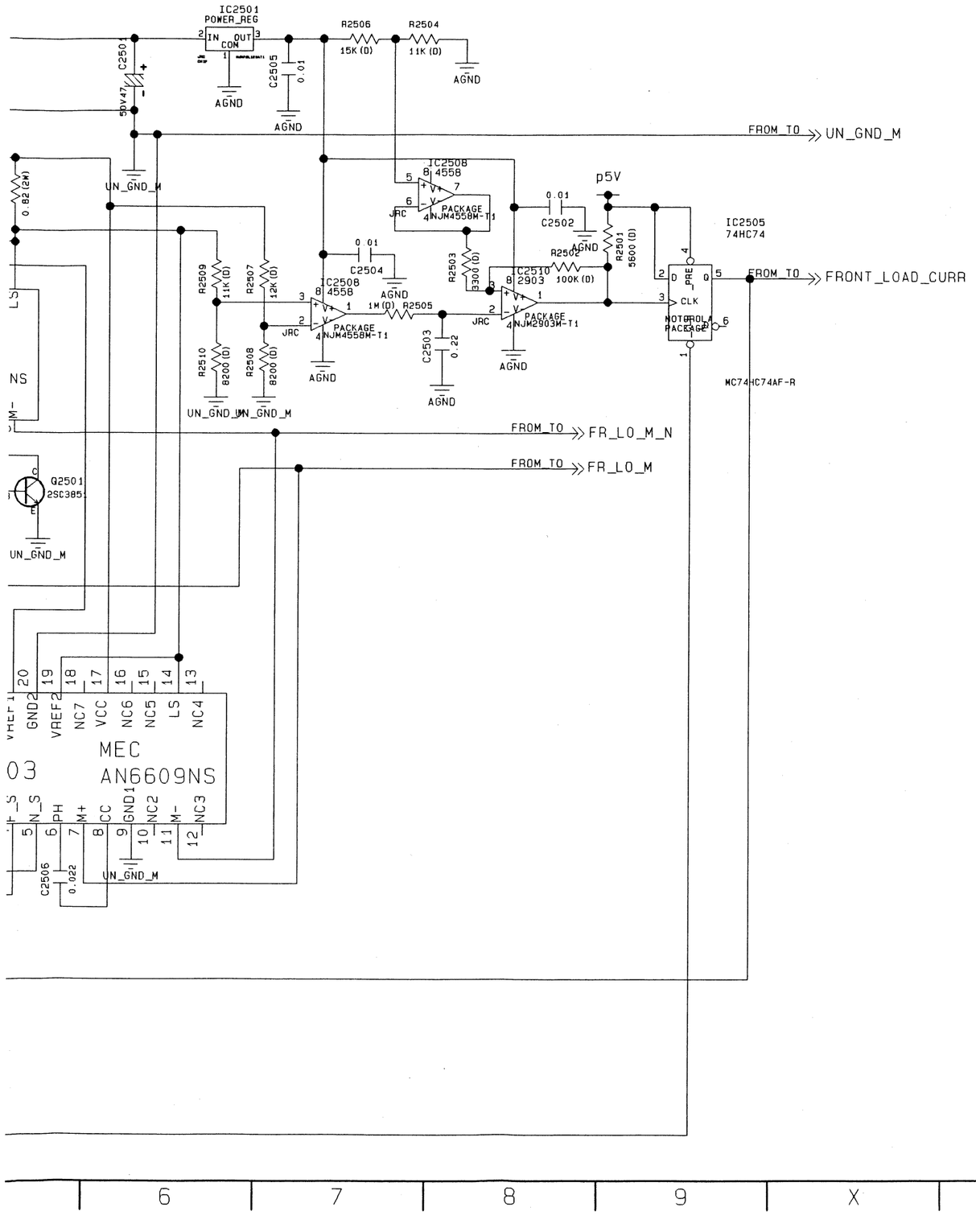

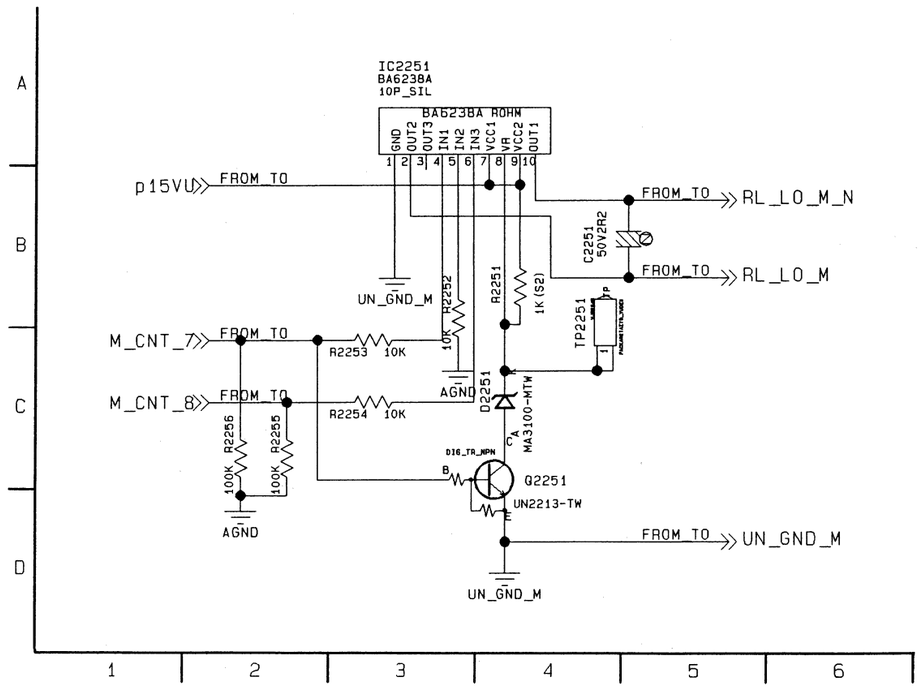

DRIVE (S0 10/11) MECHANISM CONRTOL SCHEMATIC DIAGRAM

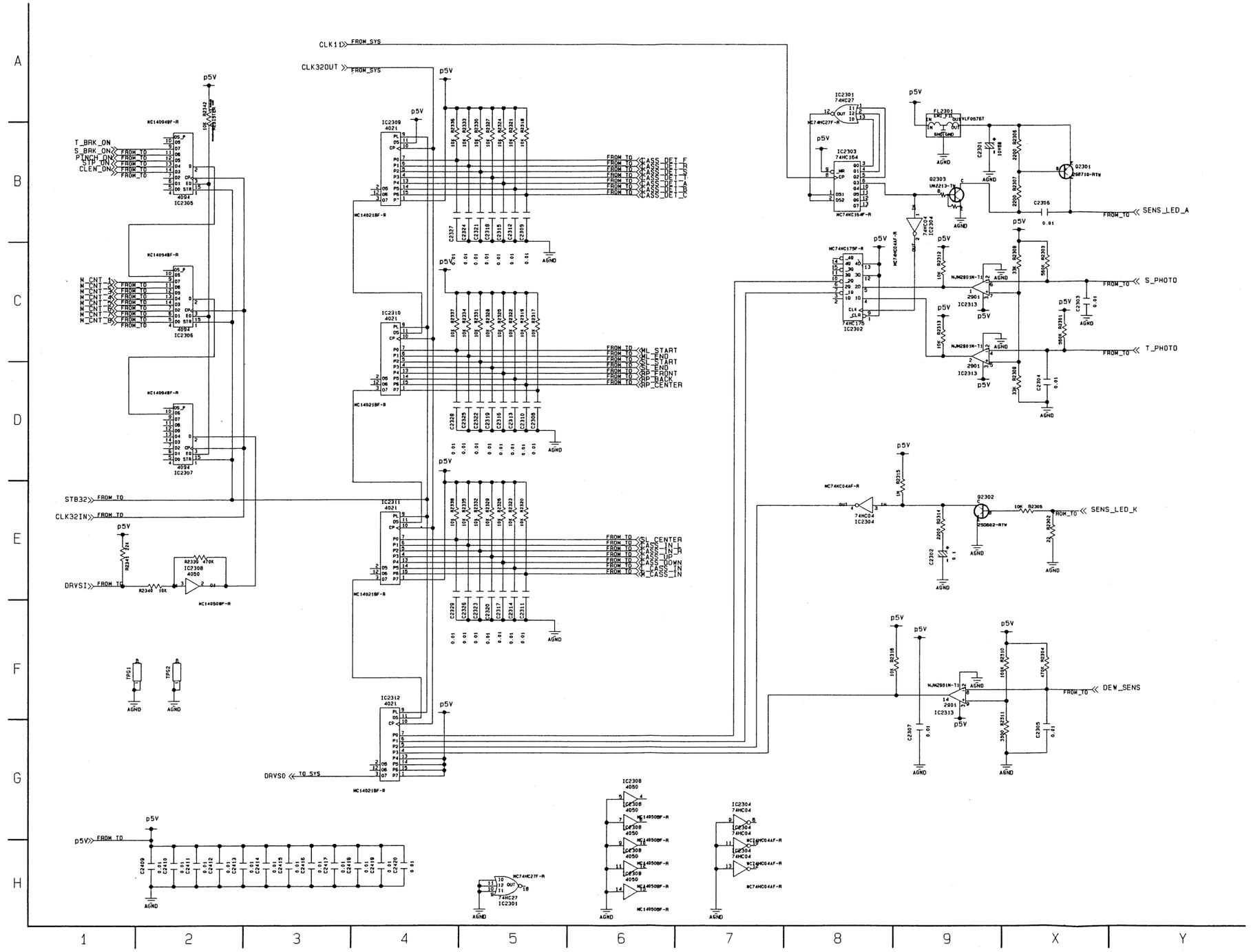

DRIVE (S0 11/11) POWER REGULATOR SCHEMATIC DIAGRAM

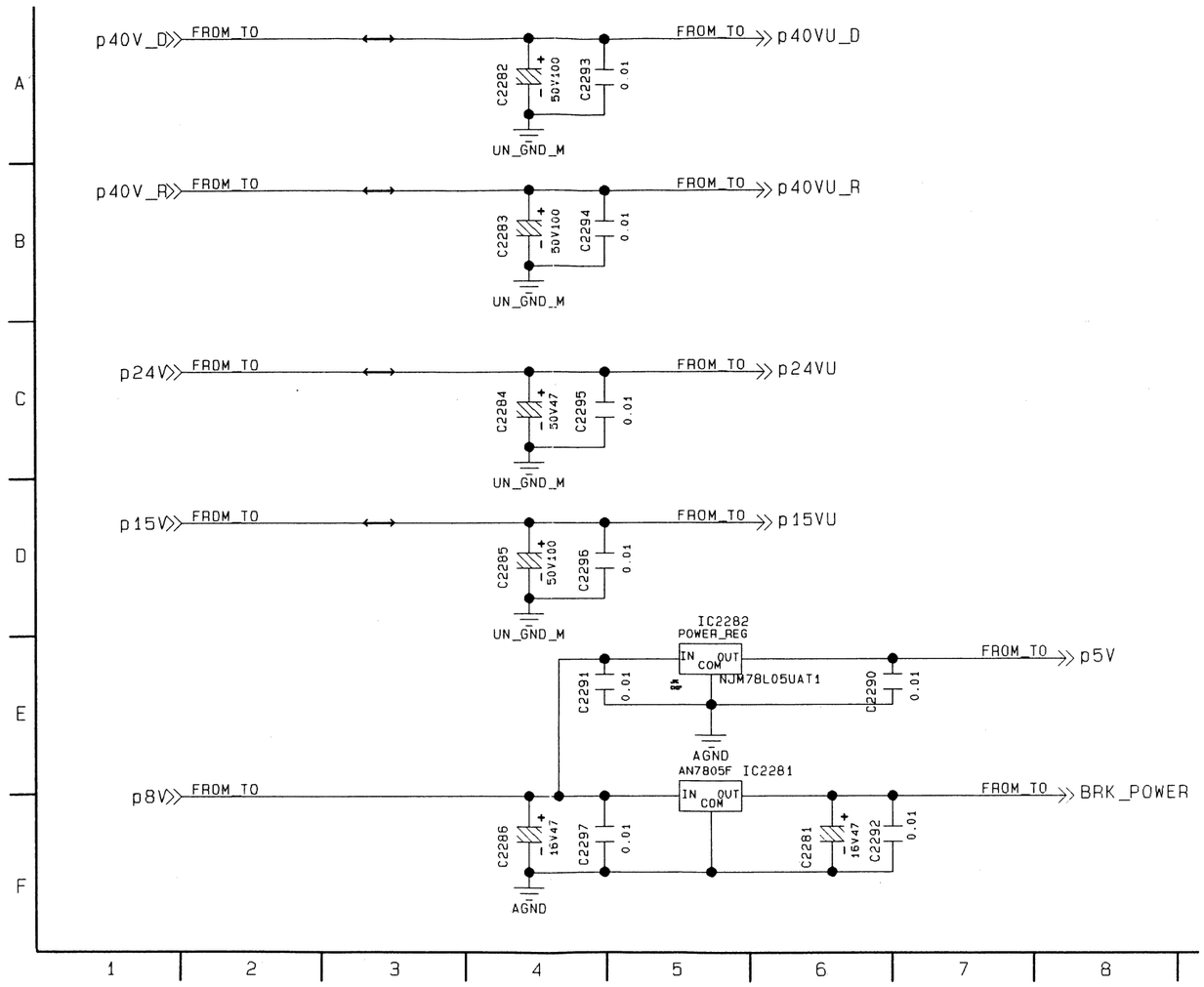

EQ1 (S1 1/5) INTEGRAL, FIX, FL, GAIN CONTROL SCHEMATIC DIAGRAM

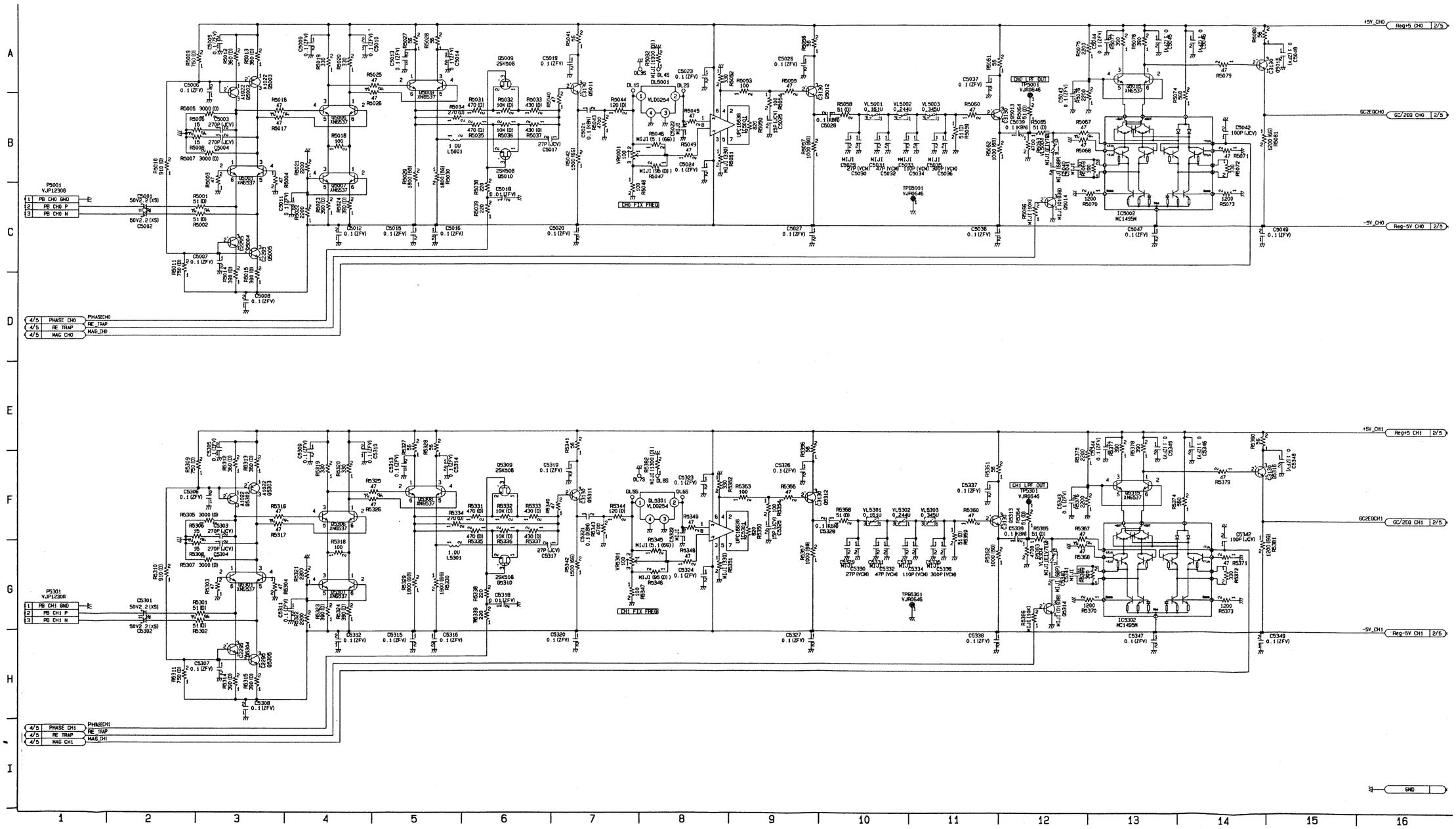

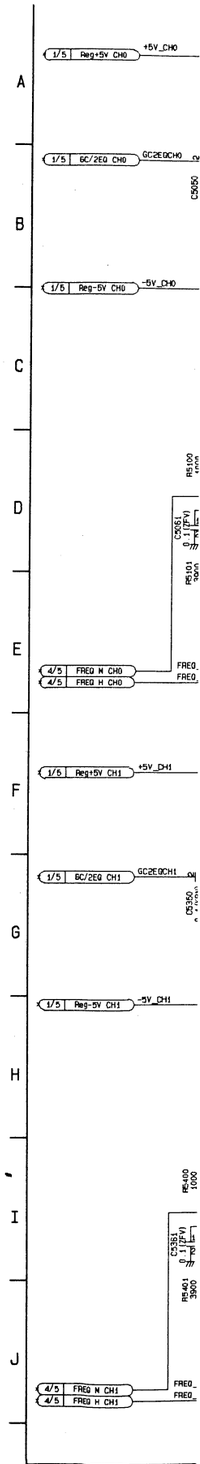

REVERSE SIDE

DRIVE (S0 10/11, 11/11)

EQ1 (S1 2/5) 2ND EQ, ENV DETECTOR, QUANTIZATION SCHEMATIC DIAGRAM

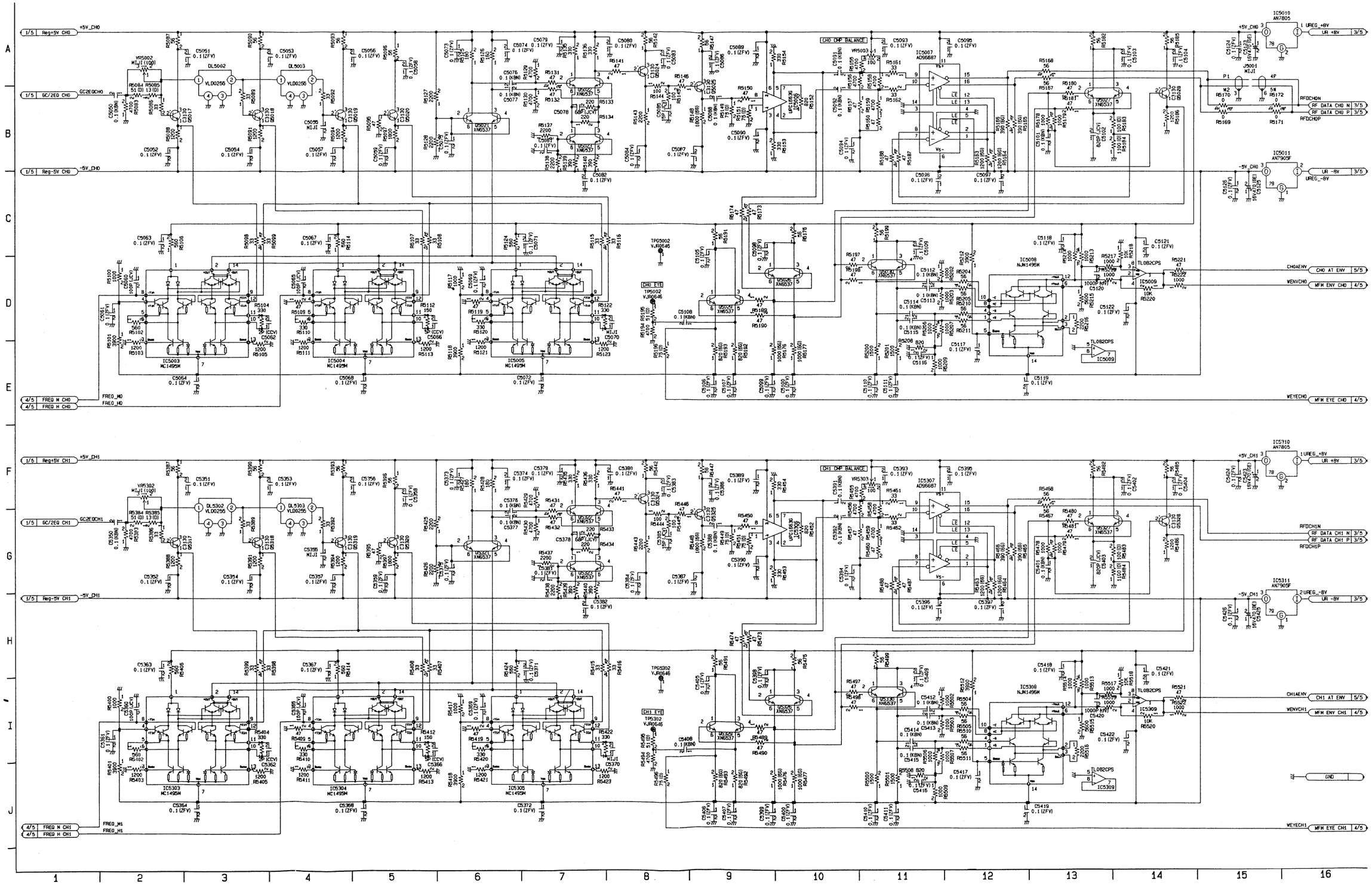

EQ1 (S1 3/5) DISCRIMINATOR, PLL SCHEMATIC DIAGRAM

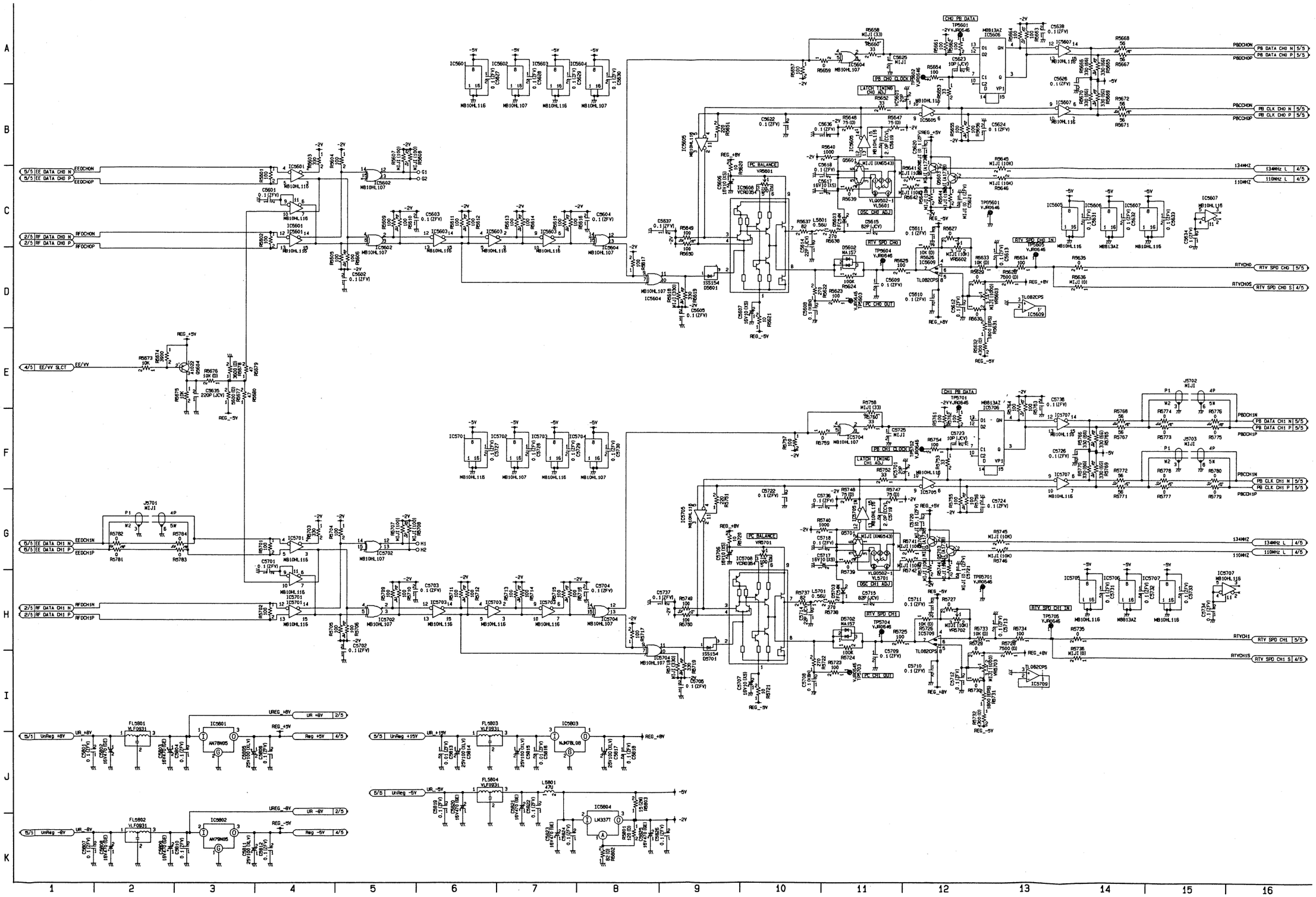

EQ1 (S1 4/5) SYSCON SERIAL INTERFACE, SERIAL HEAD SW GEN SCHEMATIC DIAGRAM

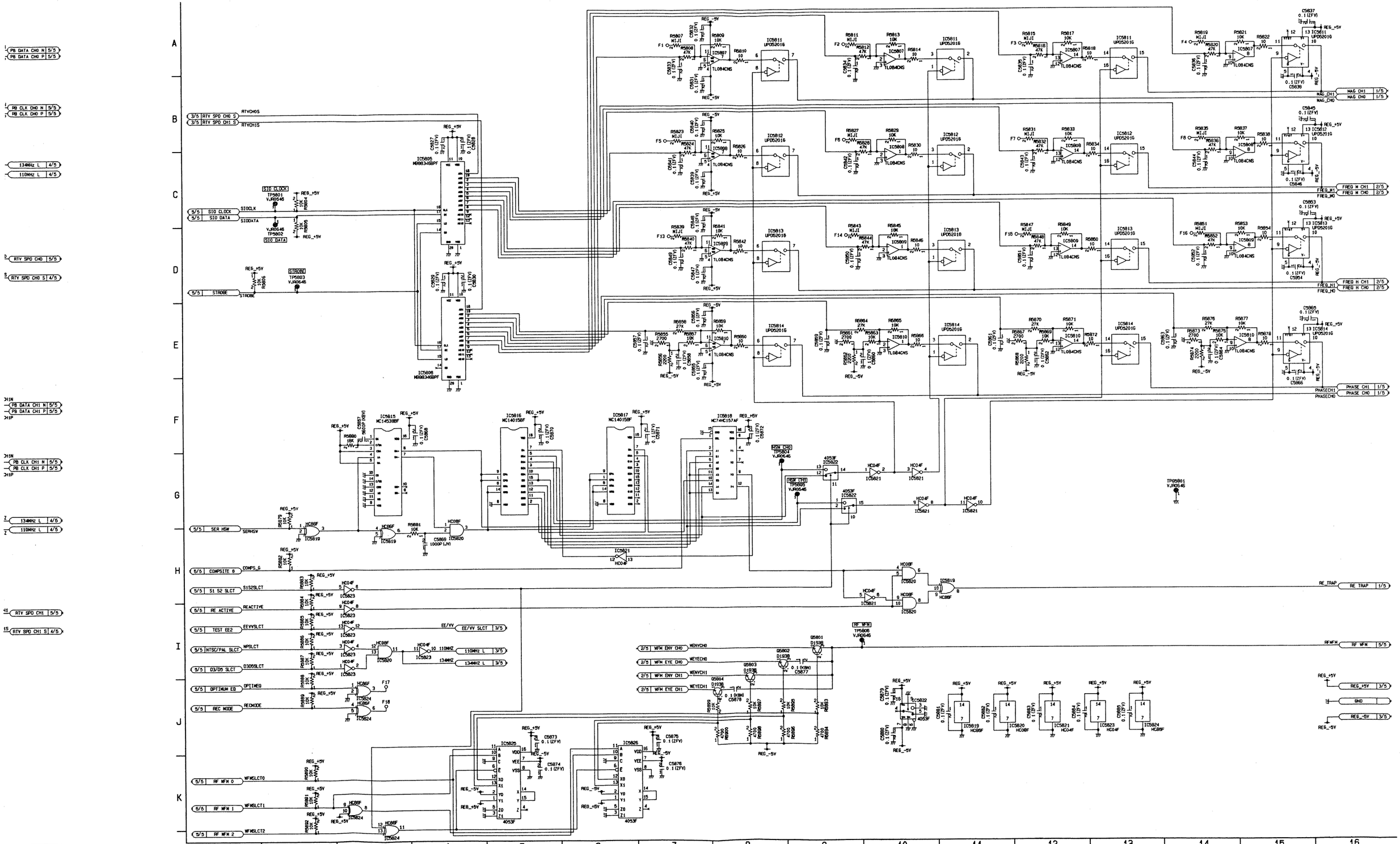

EQ1 (S1 5/5) CONNECTOR SCHEMATIC DIAGRAM

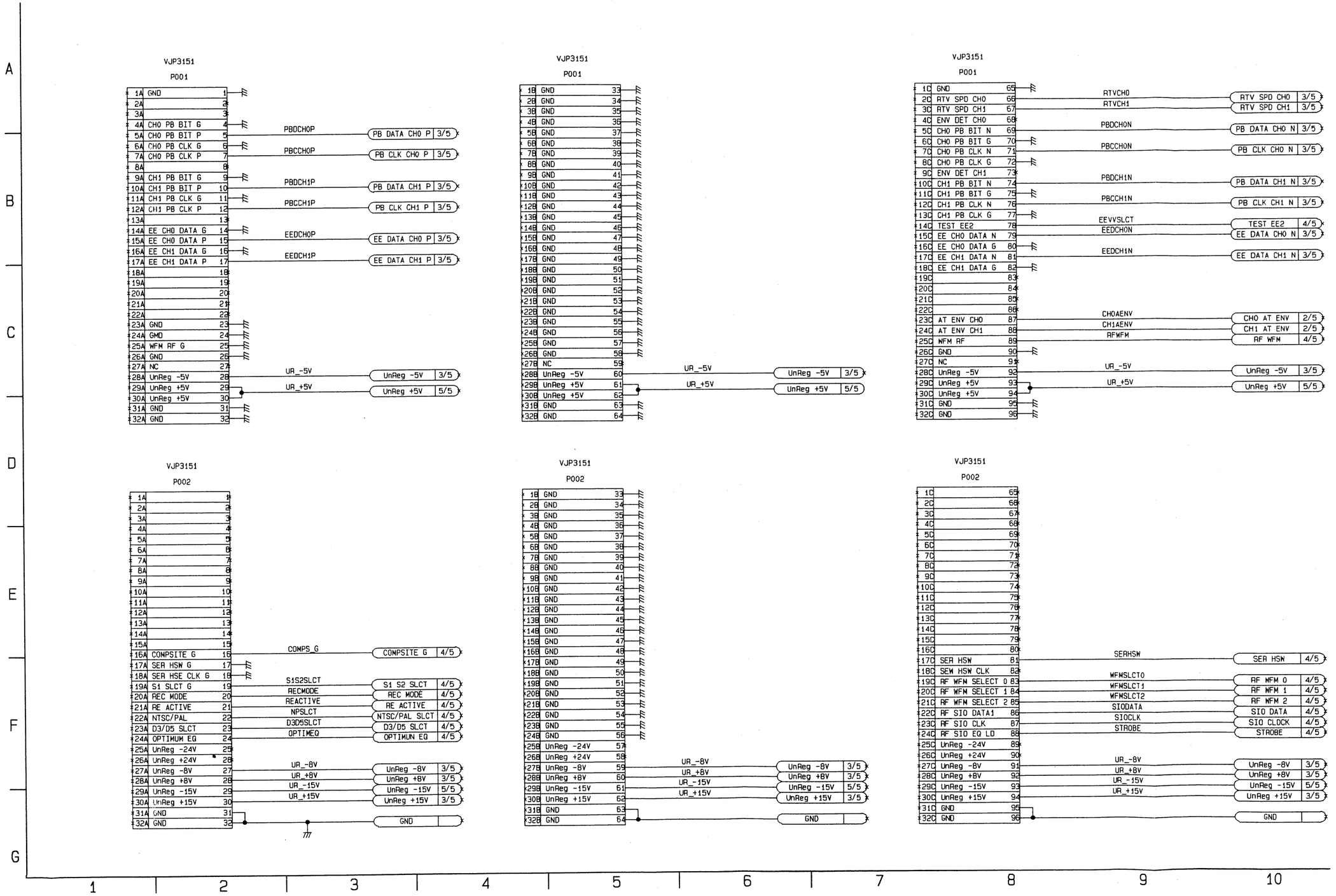

REVERSE SIDE

EQ1 (S1 3/5, 4/5)

TC/CUE (S3 1/10) SCHEMATIC DIAGRAM

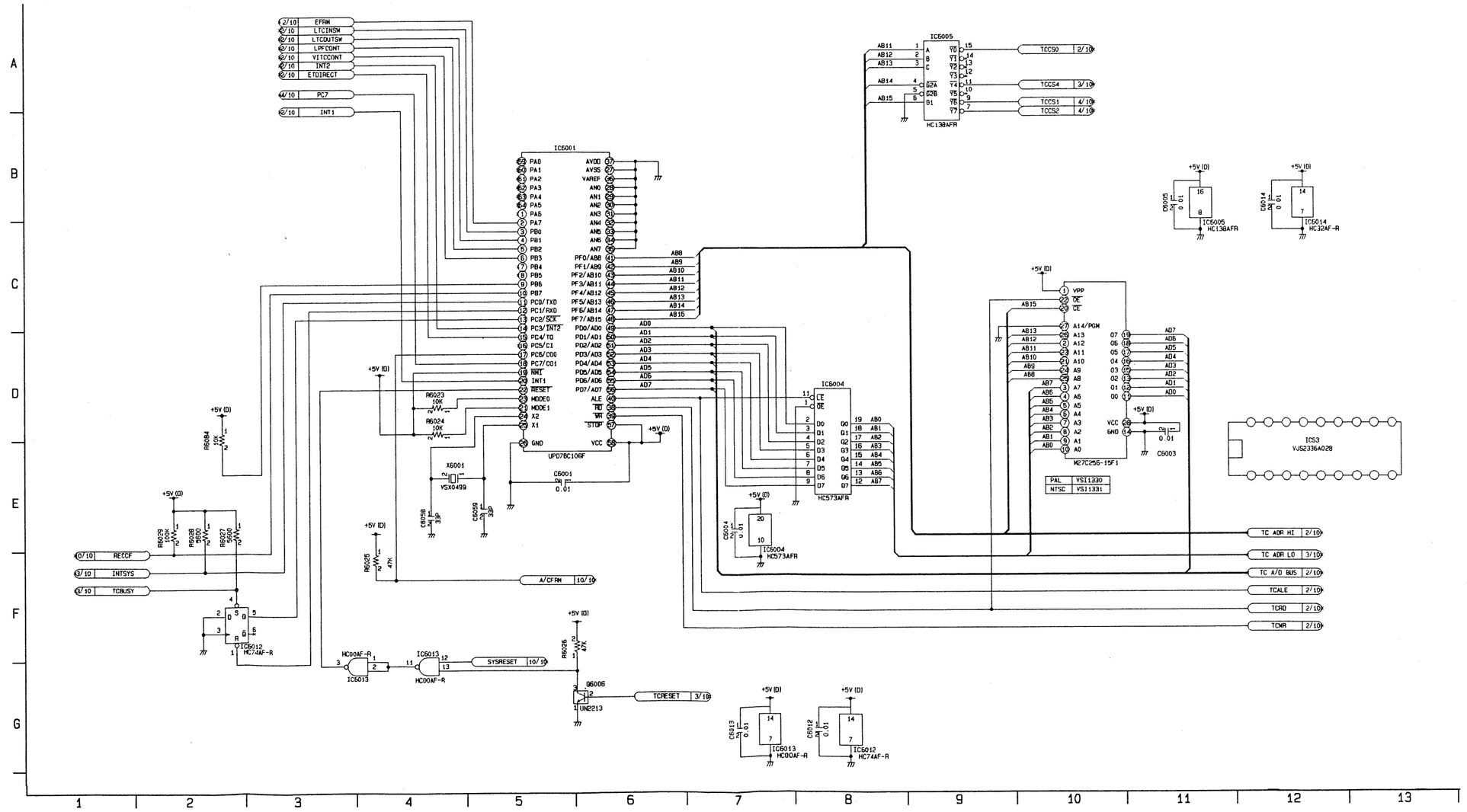

TC/CUE (S3 2/10) SCHEMATIC DIAGRAM

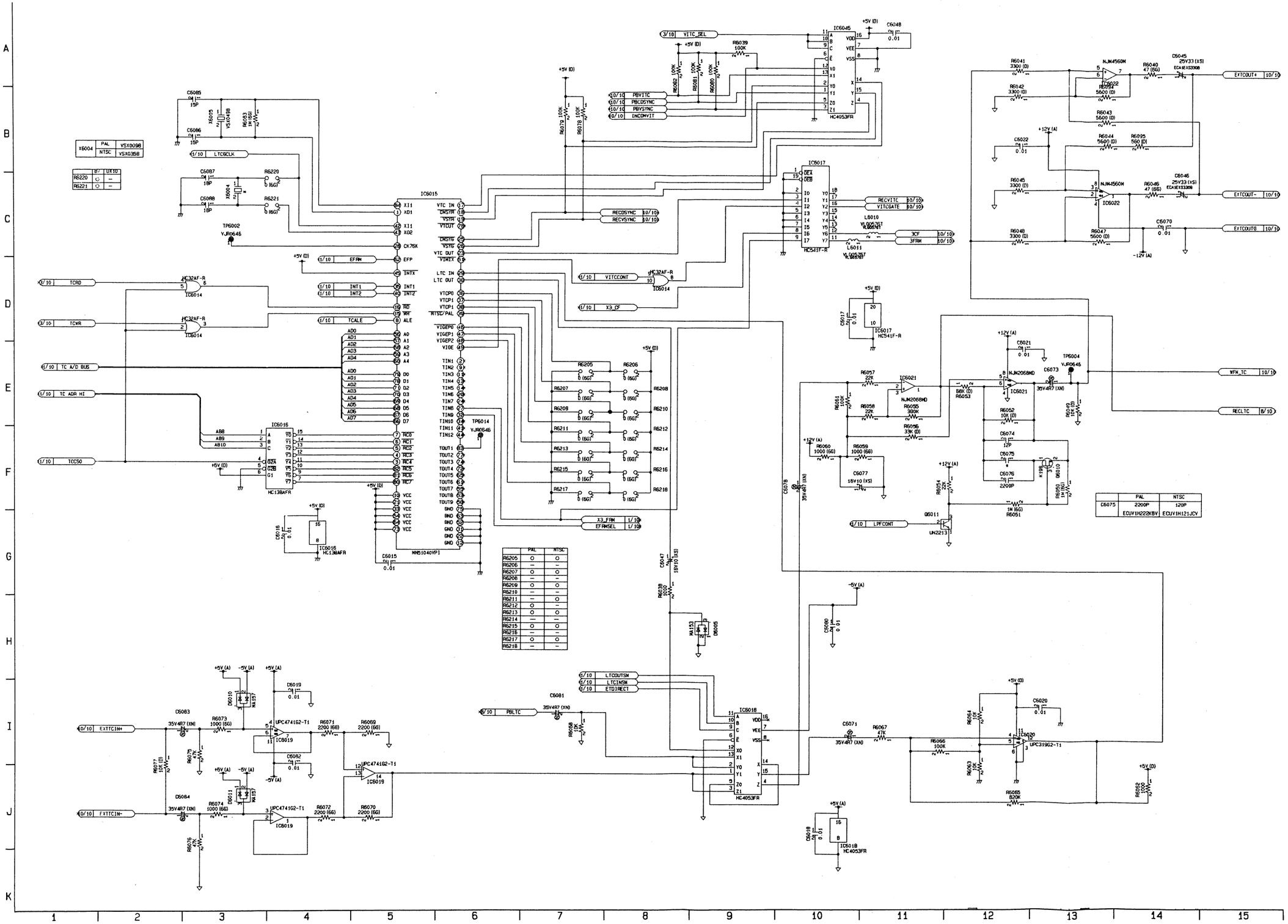

X6004	
PAL	VSX0098
NTSC	VSX0358

	B/	UX10
R6220	○	–
R6221	○	–

	PAL	NTSC
R6205	○	○
R6206	–	–
R6207	○	○
R6208	–	–
R6209	○	○
R6210	–	–
R6211	–	○
R6212	○	–
R6213	○	○
R6214	–	–
R6215	○	○
R6216	–	–
R6217	○	○
R6218	–	–

C6075	PAL	NTSC
	2200P	120P
	ECUV1H222KBV	ECUV1H121JCV

TC/CUE (S3 3/10) SCHEMATIC DIAGRAM

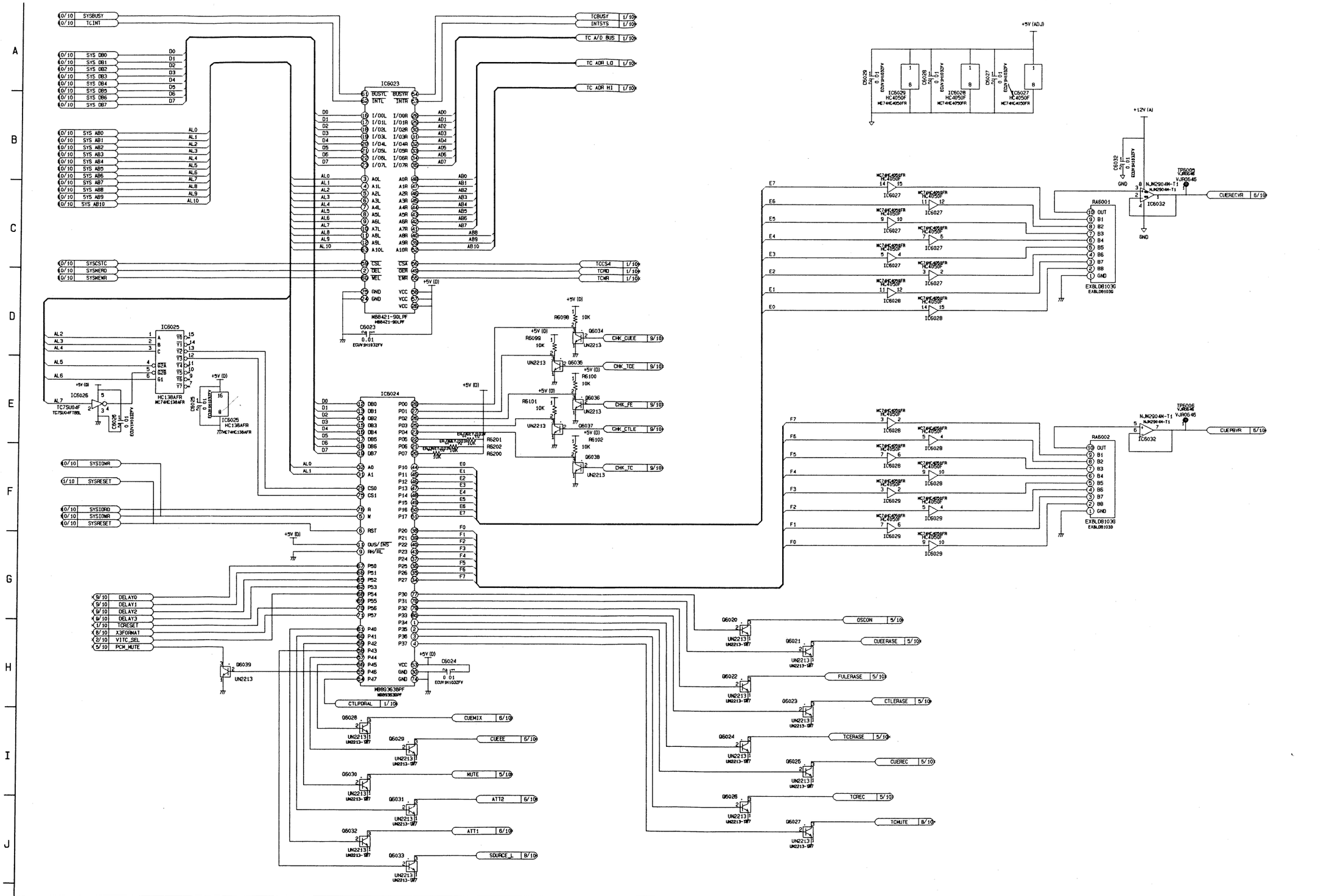

TC/CUE (S3 4/10) SCHEMATIC DIAGRAM

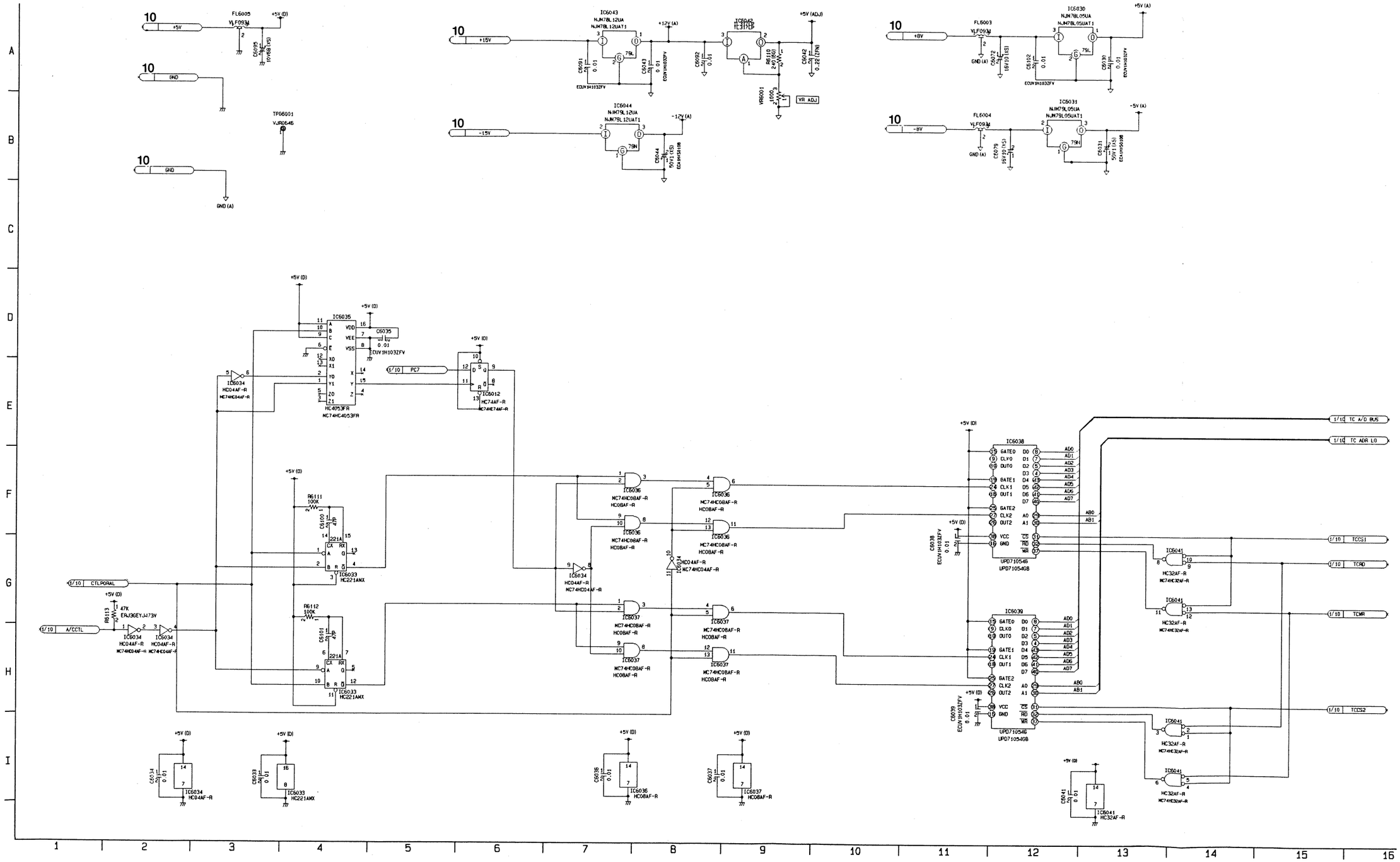

REVERSE SIDE

TC/CUE (S3 2/10, 3/10)

TC/CUE (S3 5/10) SCHEMATIC DIAGRAM

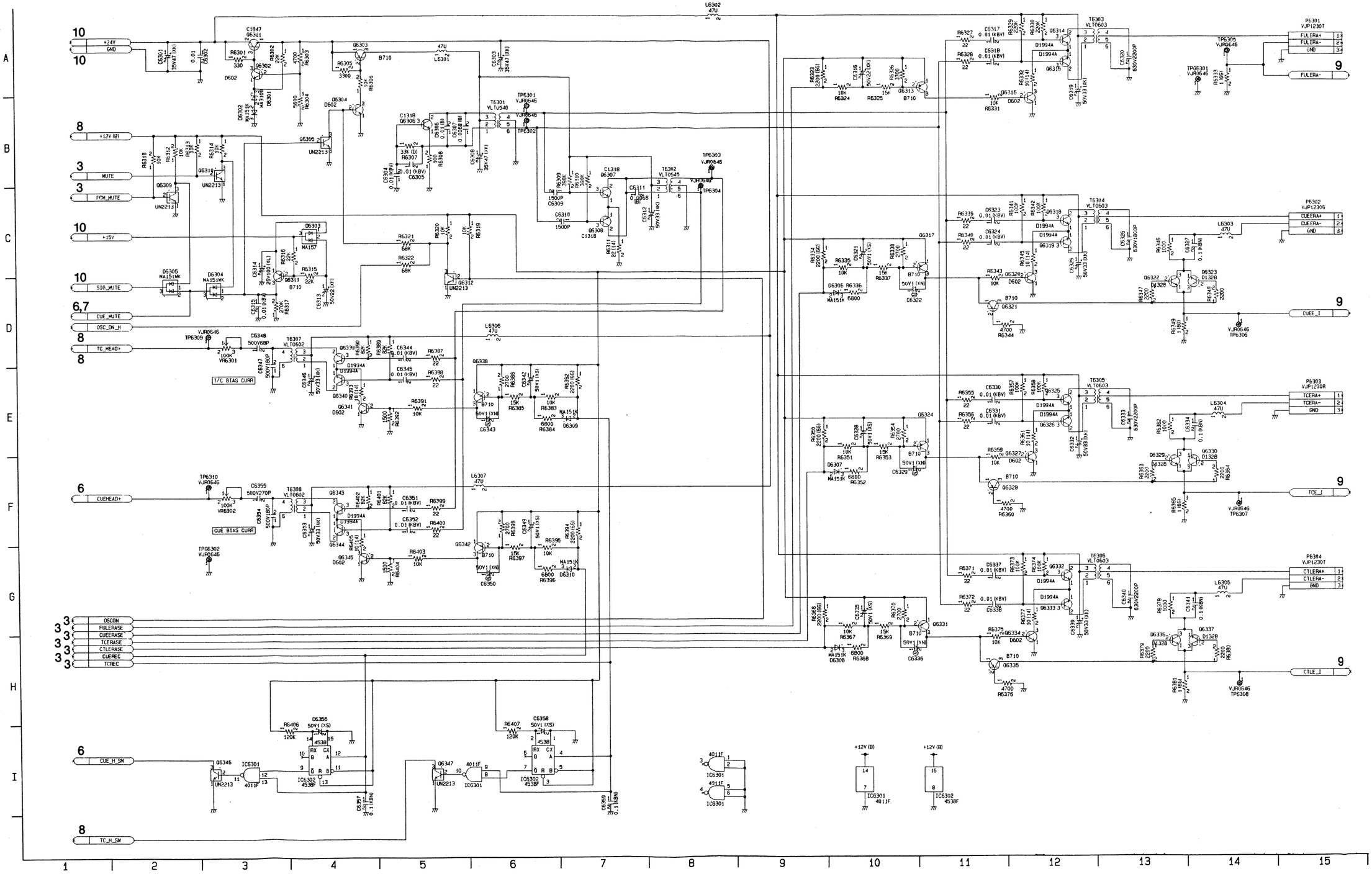

TC/CUE (S3 6/10) SCHEMATIC DIAGRAM

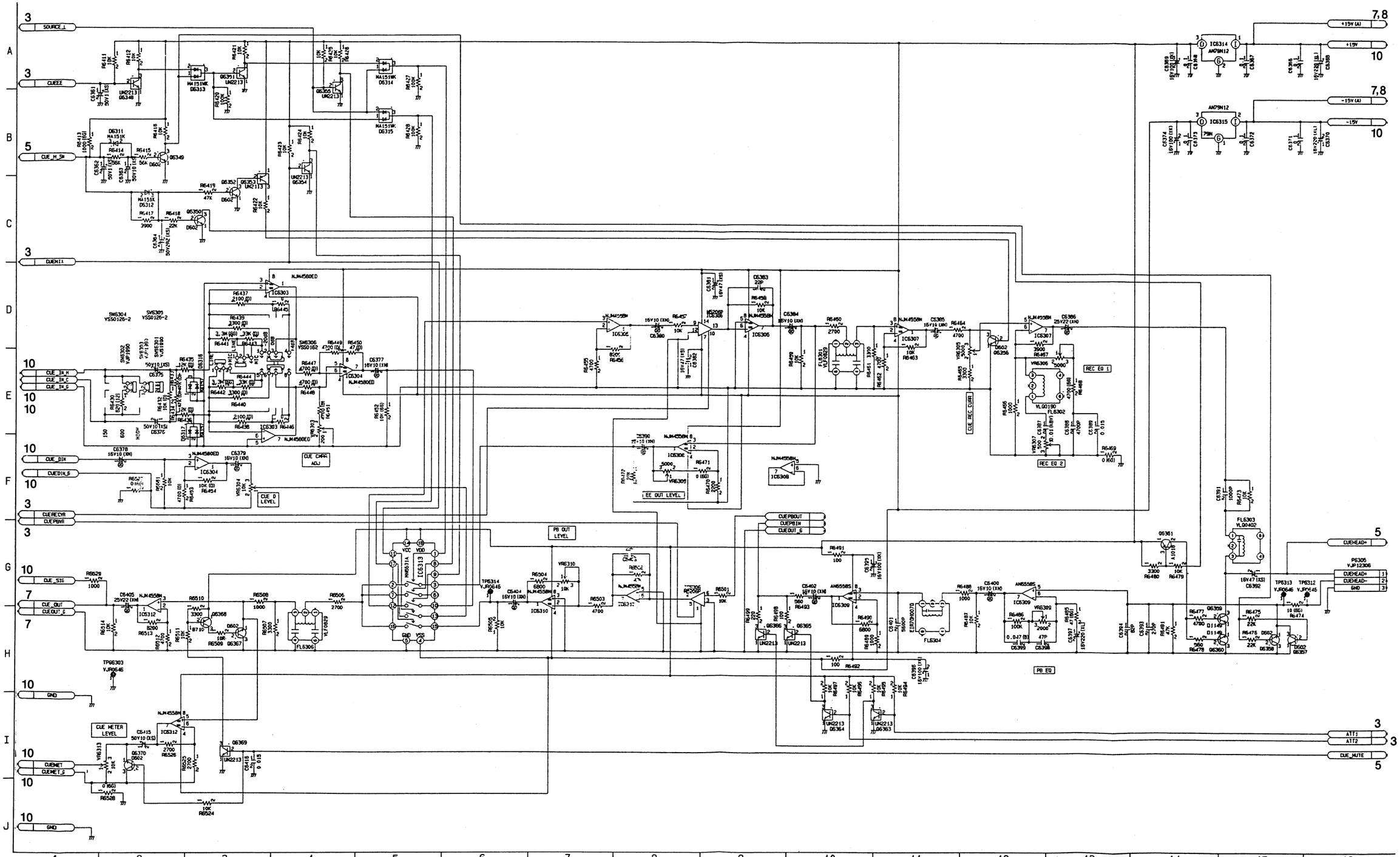

TC/CUE (S3 7/10) SCHEMATIC DIAGRAM

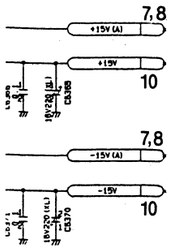

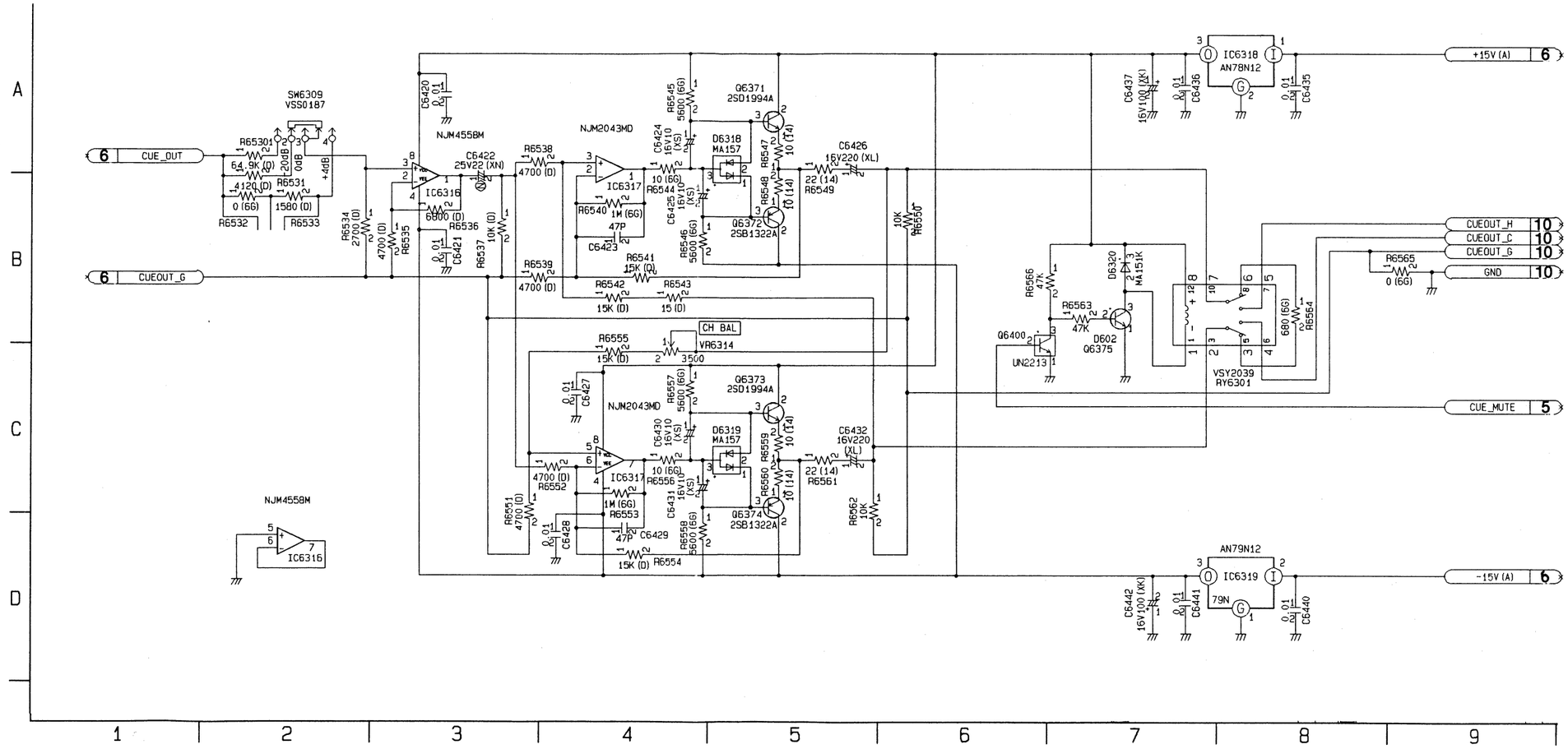

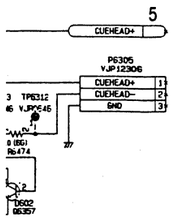

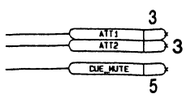

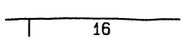

TC/CUE (S3 8/10) SCHEMATIC DIAGRAM

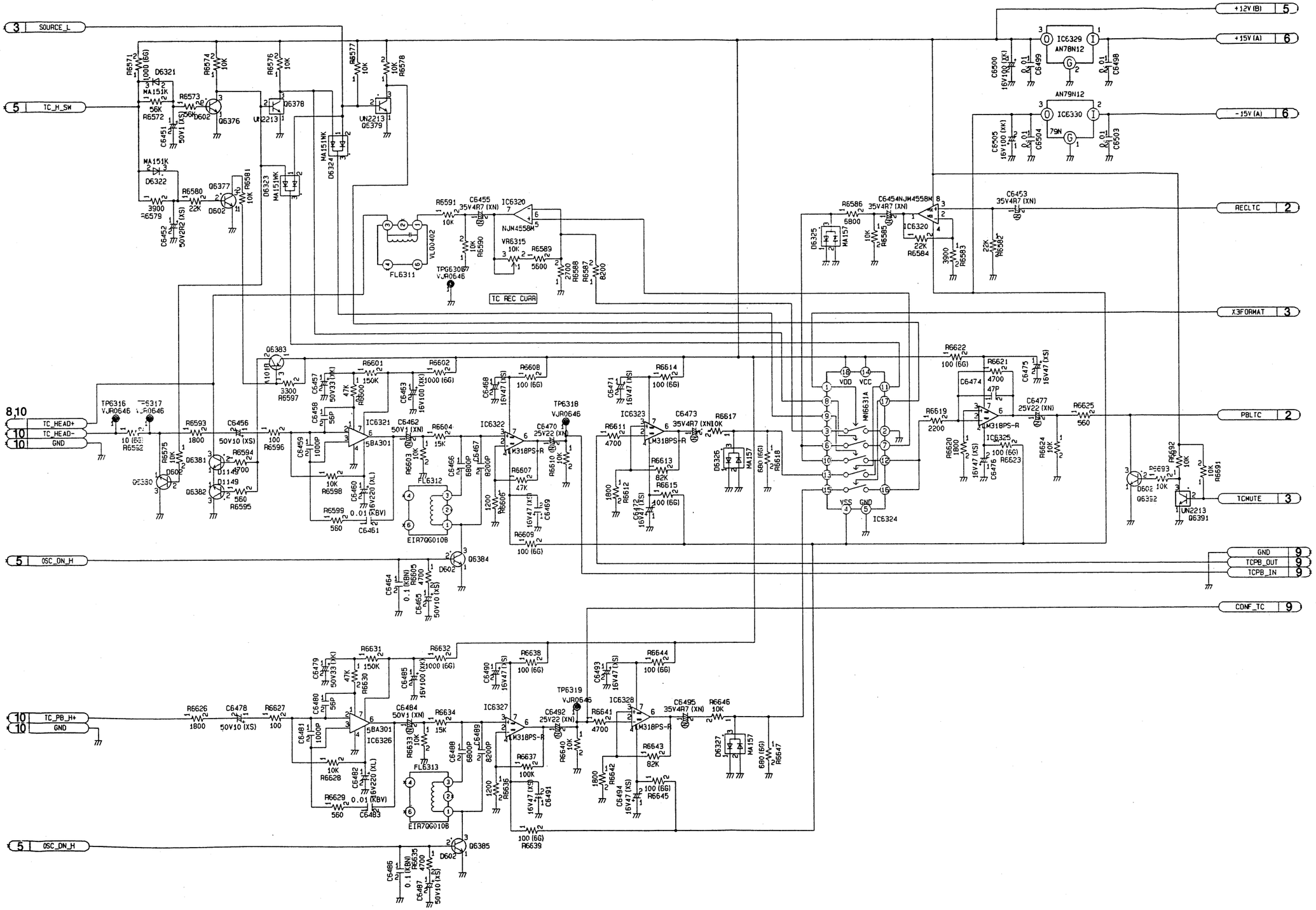

REVERSE SIDE

TC/CUE (S3 6/10, 7/10)

TC/CUE (S3 9/10) SCHEMATIC DIAGRAM

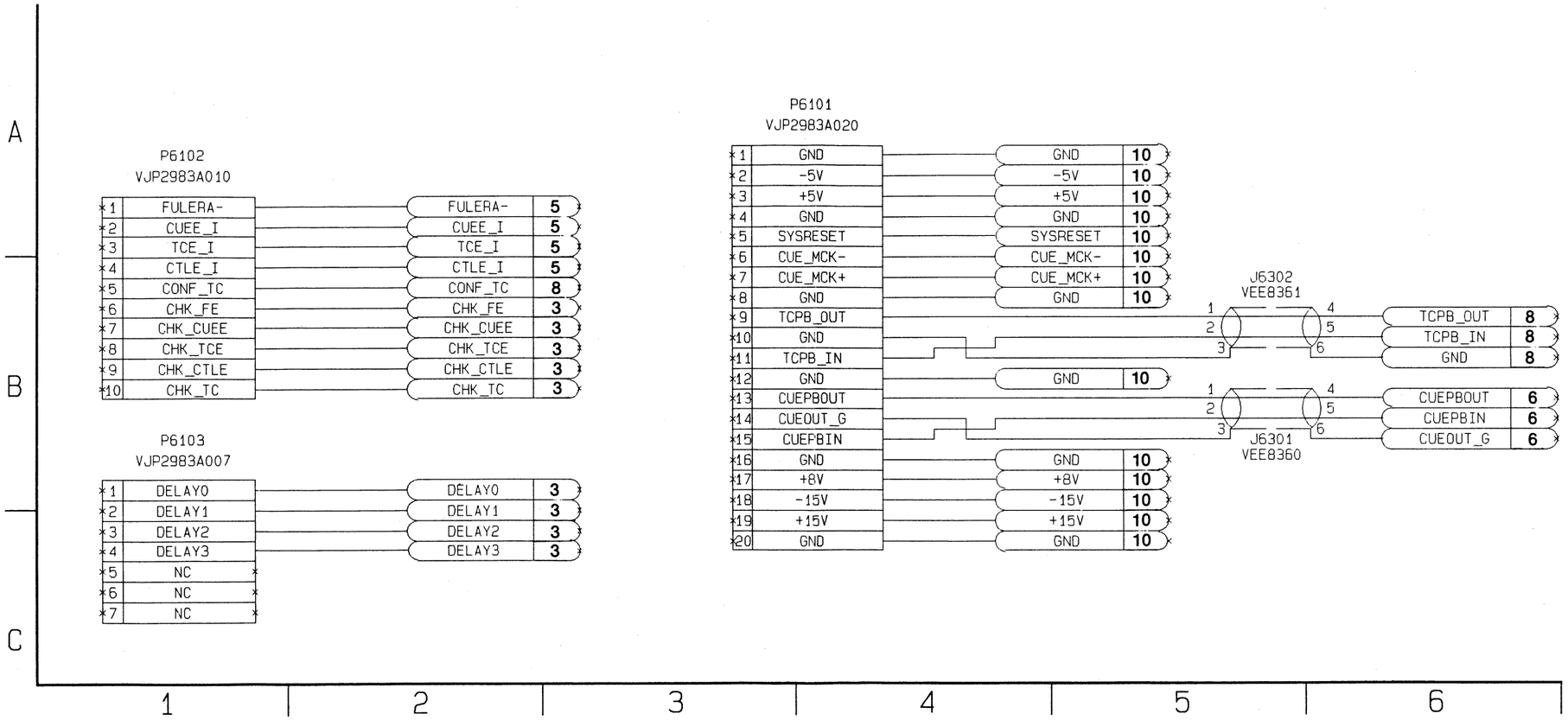

TC/CUE (S3 10/10) SCHEMATIC DIAGRAM

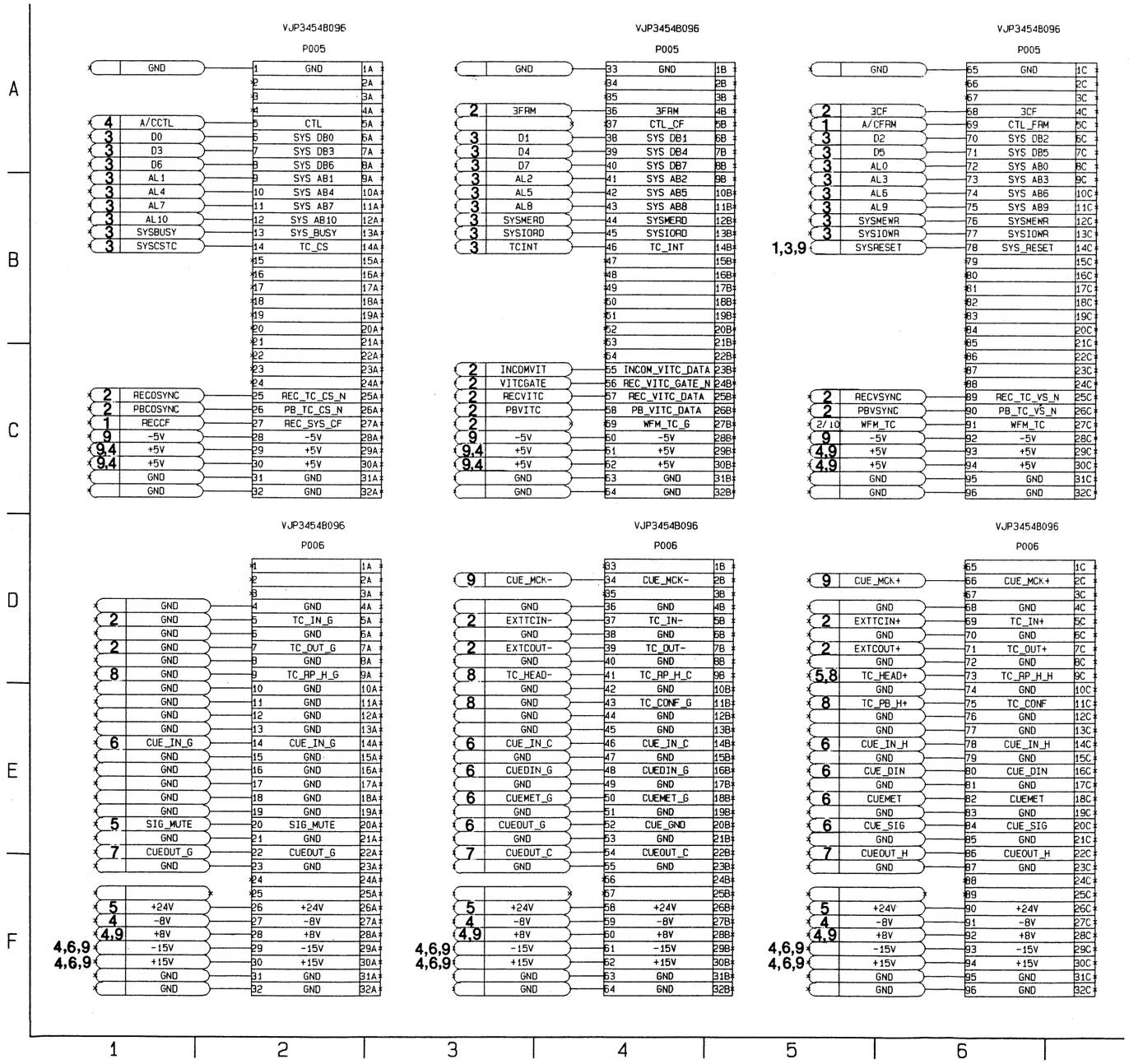

TC/CUE SUB (S3 SUB 1/3) SCHEMATIC DIAGRAM

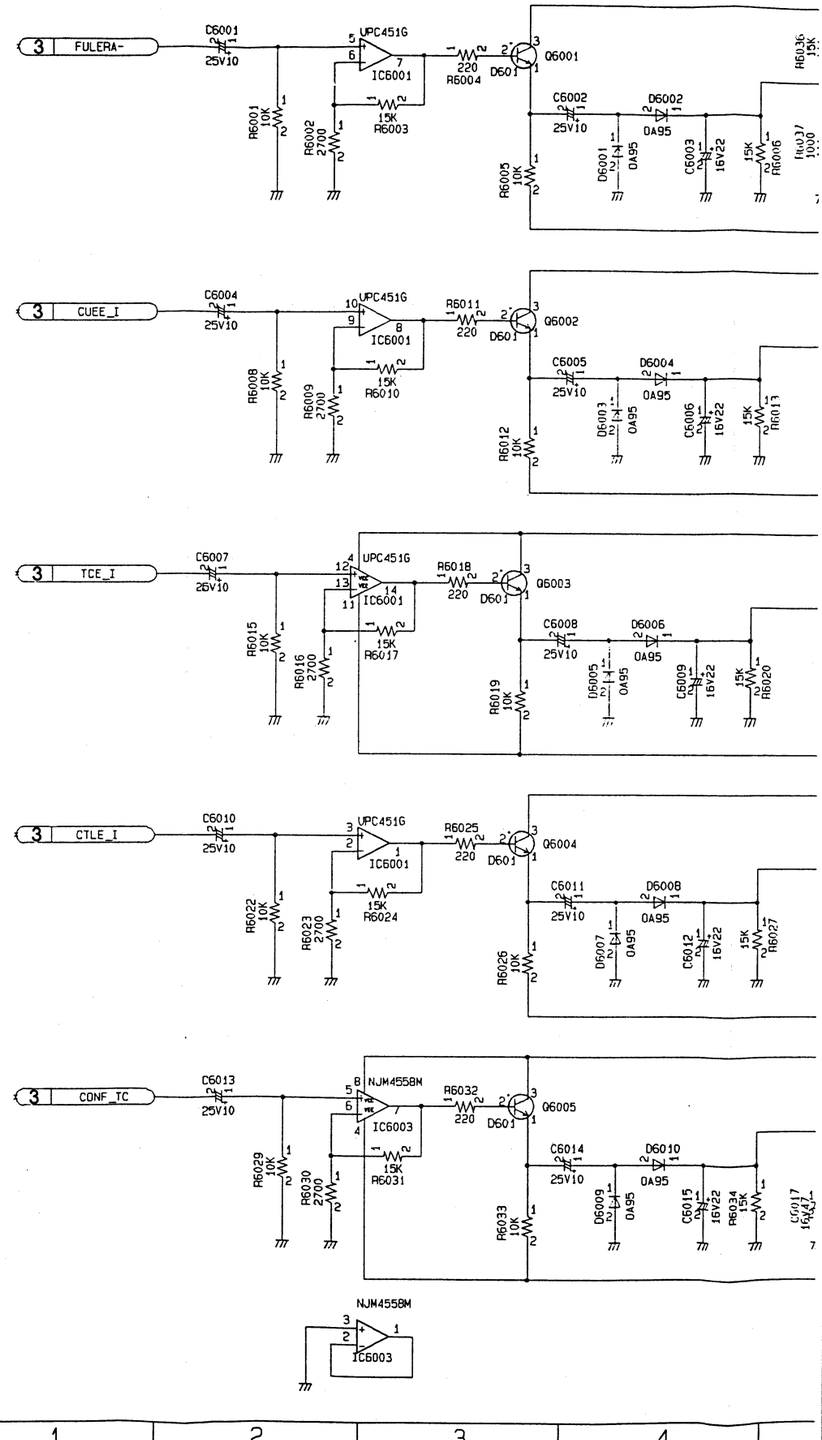

TC/CUE SUB (S3 SUB 1/3) SCHEMATIC DIAGRAM

VJP3454B096

P005

	GND	65	GND	1C
		66		2C
		67		3C
2	3CF	68	3CF	4C
1	A/CFRM	69	CTL_FRM	5C
3	D2	70	SYS_DB2	6C
3	D5	71	SYS_DB5	7C
3	AL0	72	SYS_AB0	8C
3	AL3	73	SYS_AB3	9C
3	AL6	74	SYS_AB6	10C
3	AL9	75	SYS_AB9	11C
3	SYSMEWR	76	SYSMEWR	12C
3	SYSIOWR	77	SYSIOWR	13C
3,9	SYSRESET	78	SYS_RESET	14C
		79		15C
		80		16C
		81		17C
		82		18C
		83		19C
		84		20C
		85		21C
		86		22C
		87		23C
		88		24C
2	RECVSYNC	89	REC_TC_VS_N	25C
2	PBVSYNC	90	PB_TC_VS_N	26C
2/10	WFM_TC	91	WFM_TC	27C
9	-5V	92	-5V	28C
4,9	+5V	93	+5V	29C
4,9	+5V	94	+5V	30C
	GND	95	GND	31C
	GND	96	GND	32C

VJP3454B096

P006

		65		1C
9	CUE_MCK+	66	CUE_MCK+	2C
		67		3C
	GND	68	GND	4C
2	EXTTCIN+	69	TC_IN+	5C
	GND	70	GND	6C
2	EXTCOUT+	71	TC_OUT+	7C
	GND	72	GND	8C
5,8	TC_HEAD+	73	TC_RP_H_H	9C
	GND	74	GND	10C
8	TC_PB_H+	75	TC_CONF	11C
	GND	76	GND	12C
	GND	77	GND	13C
6	CUE_IN_H	78	CUE_IN_H	14C
	GND	79	GND	15C
6	CUE_DIN	80	CUE_DIN	16C
	GND	81	GND	17C
6	CUEMET	82	CUEMET	18C
	GND	83	GND	19C
6	CUE_SIG	84	CUE_SIG	20C
	GND	85	GND	21C
7	CUEOUT_H	86	CUEOUT_H	22C
	GND	87	GND	23C
		88		24C
		89		25C
5	+24V	90	+24V	26C
4	-8V	91	-8V	27C
4,9	+8V	92	+8V	28C
9	-15V	93	-15V	29C
9	+15V	94	+15V	30C
	GND	95	GND	31C
	GND	96	GND	32C

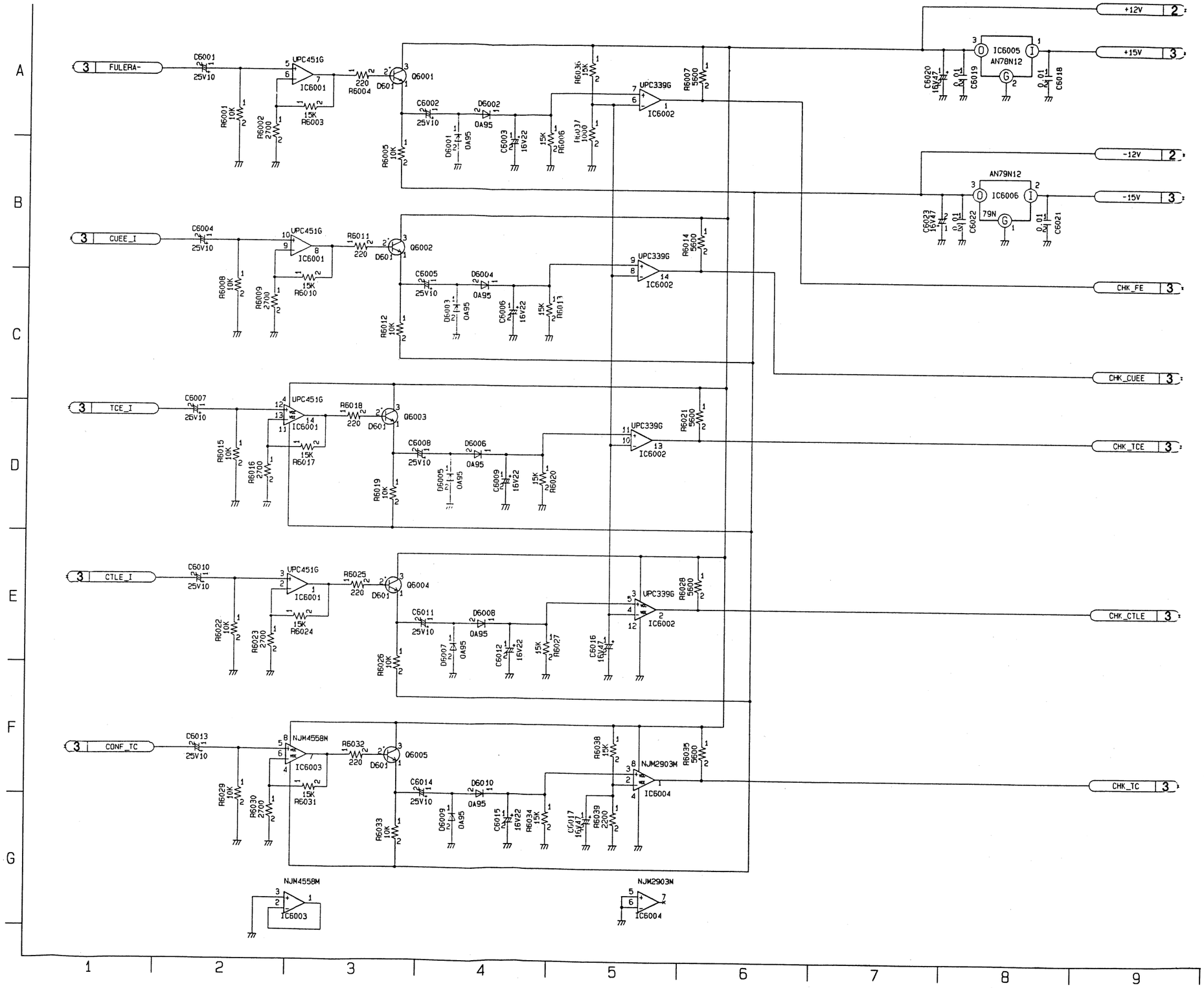

TC/CUE SUB (S3 SUB 2/3) SCHEMATIC DIAGRAM

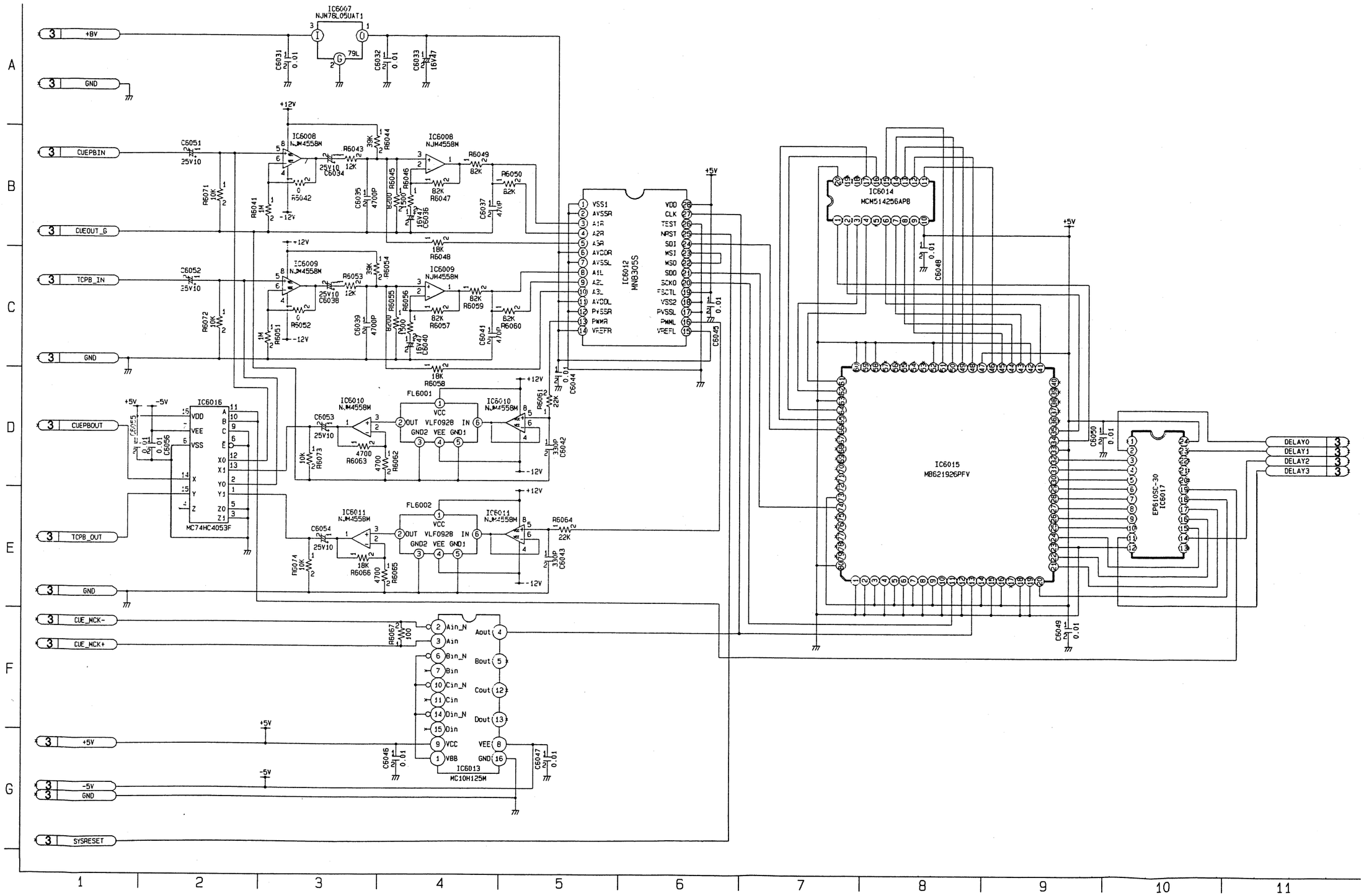

TC/CUE SUB (S3 SUB 3/3) SCHEMATIC DIAGRAM

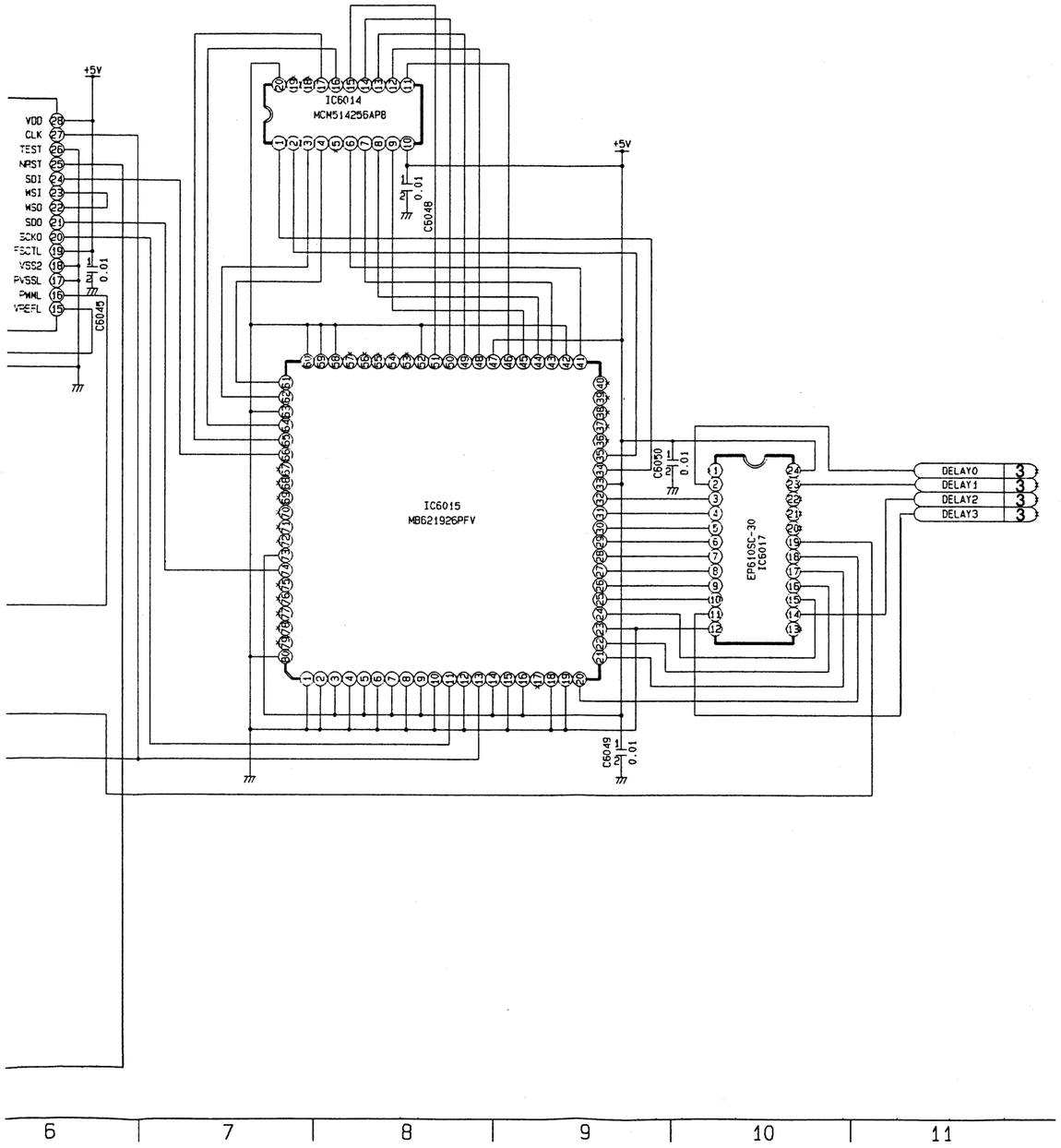

P6102
VJS2983A010

1	FULERA-	FULERA-	1
2	CUEE_I	CUEE_I	1
3	TCE_I	TCE_I	1
4	CTLE_I	CTLE_I	1
5	CONF_TC	CONF_TC	1
6	CHK_FE	CHK_FE	1
7	CHK_CUEE	CHK_CUEE	1
8	CHK_TCE	CHK_TCE	1
9	CHK_CTLE	CHK_CTLE	1
10	CHK_TC	CHK_TC	1

P6101
VJS2983A020

1	GND	GND	1,2
2	-5V	-5V	2
3	+5V	+5V	2
4	GND	GND	1,2
5	SYSRESET	SYSRESET	2
6	CUE_MCK-	CUE_MCK-	2
7	CUE_MCK+	CUE_MCK+	2
8	GND	GND	1,2
9	TCPB_OUT	TCPB_OUT	2
10	GND	GND	1,2
11	TCPB_IN	TCPB_IN	2
12	GND	GND	1,2
13	CUEPBOUT	CUEPBOUT	2
14	CUEOUT_G	CUEOUT_G	2
15	CUEPBIN	CUEPBIN	2
16	GND	GND	1,2
17	+8V	+8V	2
18	-15V	-15V	1
19	+15V	+15V	1
20	GND	GND	1,2

P6103
VJS2983A007

1	DELAY0	DELAY0	2
2	DELAY1	DELAY1	2
3	DELAY2	DELAY2	2
4	DELAY3	DELAY3	2
5	NC		
6	NC		
7	NC		

SERVO/AT (S4 1/16) CONNECTOR SCHEMATIC DIAGRAM

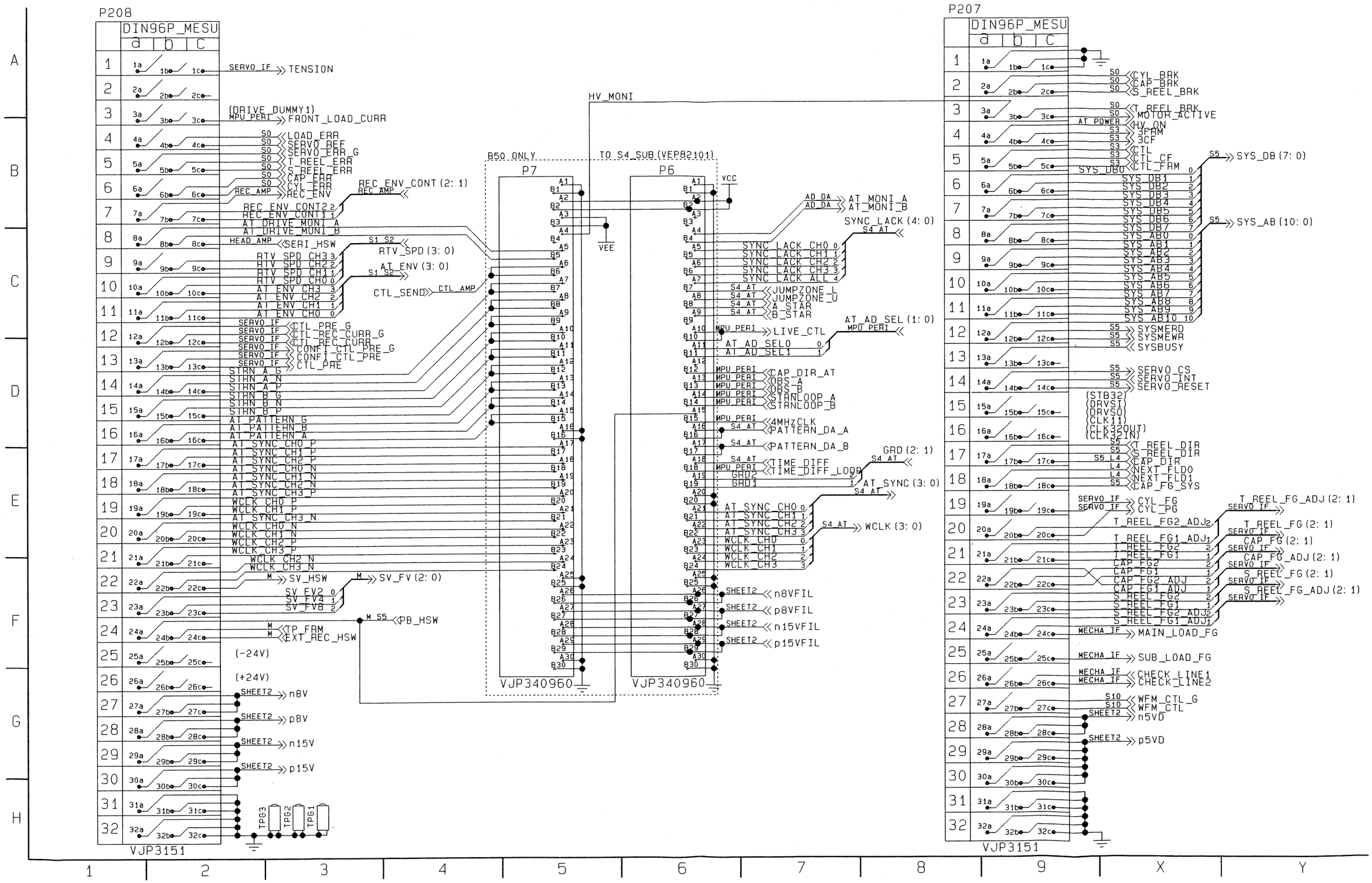

SERVO/AT (S4 2/16) OVERALL 1 SCHEMATIC DIAGRAM

_DB (7: 0)

_AB (10: 0)

EEL_FG_ADJ (2: 1)
IF
REEL_FG (2: 1)
IF
P_FG (2: 1)
IF
P_FG_ADJ (2: 1)
IF
REEL_FG (2: 1)
IF
REEL_FG_ADJ (2: 1)
IF

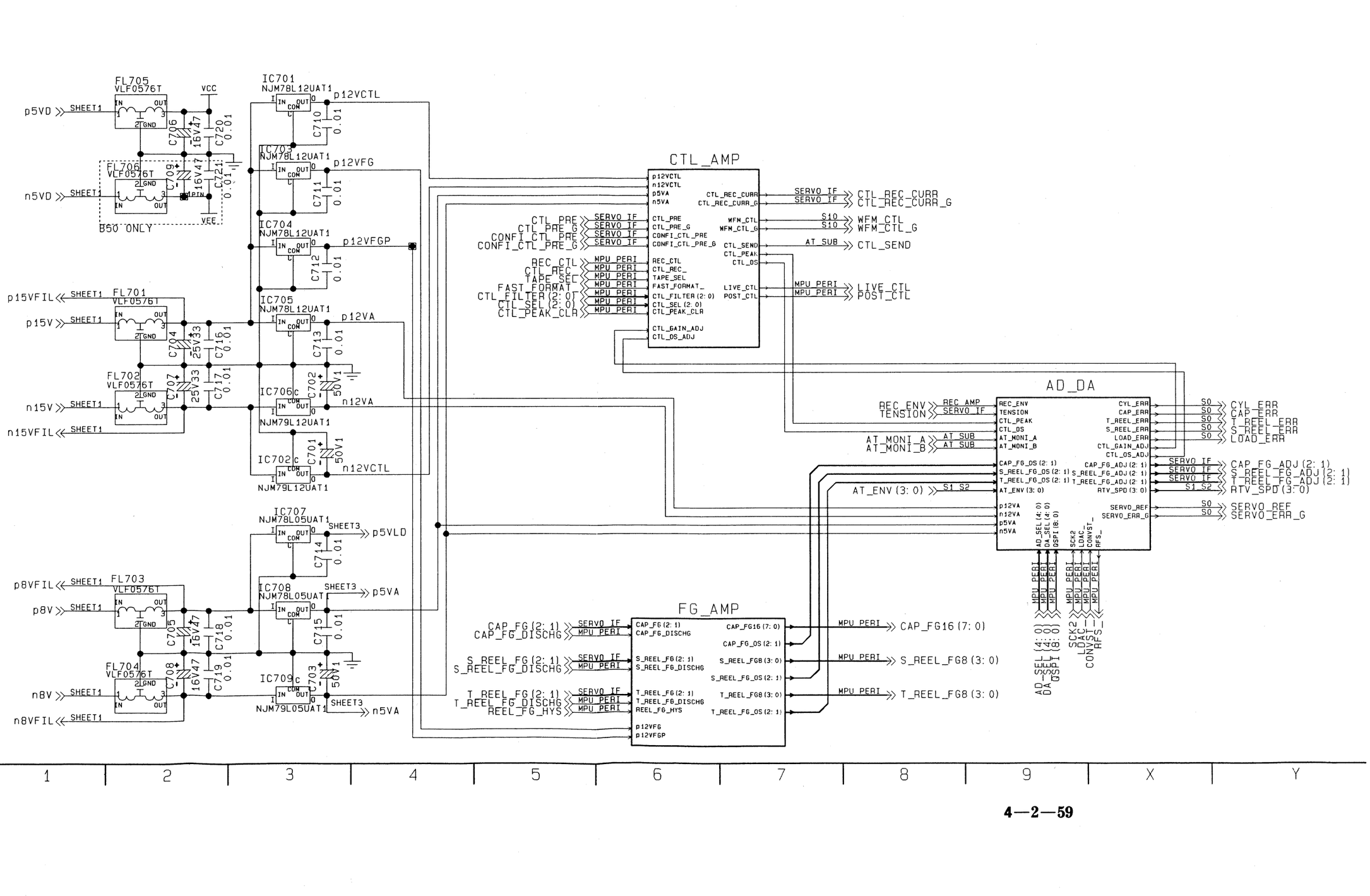

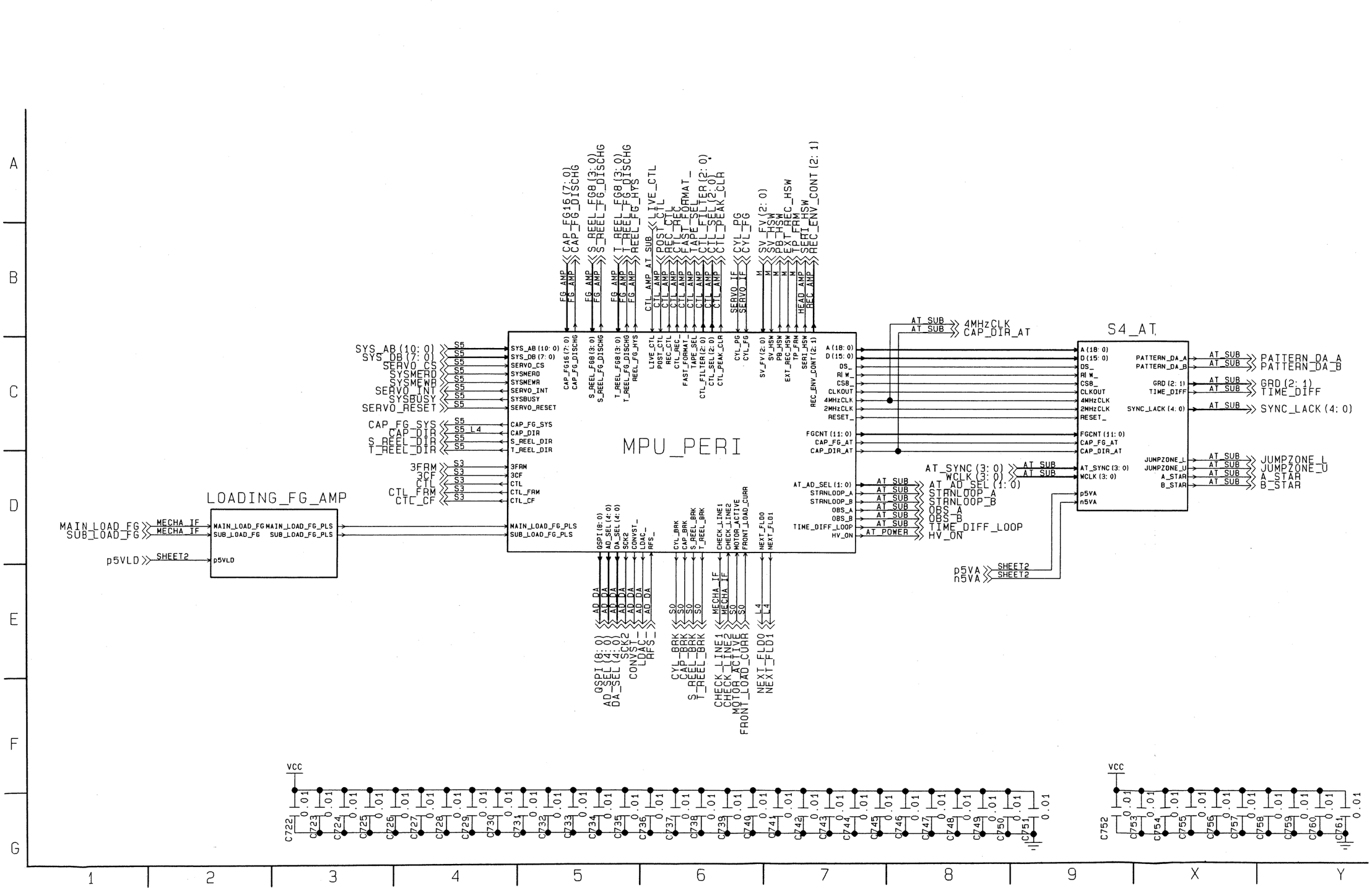
MPU_PERI
LOADING_FG_AMP
S4_AT
SYS_AB(10:0)
SYS_DB(7:0)
SERVO_CS
SYSMERD
SYSMEWR
SERVO_INT
SYSBUSY
SERVO_RESET
CAP_FG_SYS
CAP_DIR
S_REEL_DIR
T_REEL_DIR
3FRM
3CF
CTL
CTL_FRM
CTC_CF
CAP_FG16(7:0)
CAP_FG_DISCHG
S_REEL_FG8(3:0)
S_REEL_FG_DISCHG
T_REEL_FG8(3:0)
T_REEL_FG_DISCHG
REEL_FG_HYS
LIVE_CTL
POST_CTL
REC_CTL
CTL_REC_
FAST_FORMAT_
TAPE_SEL
CTL_FILTER(2:0)
CTL_SEL(2:0)
CTL_PEAK_CLR
CYL_PG
CYL_FG
SV_FV(2:0)
SV_HSW
PB_HSW
EXT_REC_HSW
TP_FRM
SERI_HSW
REC_ENV_CONT(2:1)
A(18:0)
D(15:0)
DS_
RW_
CS8_
CLKOUT
4MHzCLK
2MHzCLK
RESET_
FGCNT(11:0)
CAP_FG_AT
CAP_DIR_AT
AT_SYNC(3:0)
WCLK(3:0)
AT_AD_SEL(1:0)
STRNLOOP_A
STRNLOOP_B
OBS_A
OBS_B
TIME_DIFF_LOOP
HV_ON
AT_POWER
p5VA
n5VA
PATTERN_DA_A
PATTERN_DA_B
GRD(2:1)
TIME_DIFF
SYNC_LACK(4:0)
JUMPZONE_L
JUMPZONE_U
A_STAR
B_STAR
MAIN_LOAD_FG
SUB_LOAD_FG
MECHA_IF
p5VLD
SHEET2
MAIN_LOAD_FG_PLS
SUB_LOAD_FG_PLS
GSPI(8:0)
AD_SEL(4:0)
DA_SEL(4:0)
SCK2
CONVST_
LDAC_
RFS_
AD_DA
CYL_BRK
CAP_BRK
S_REEL_BRK
T_REEL_BRK
CHECK_LINE1
CHECK_LINE2
MOTOR_ACTIVE
FRONT_LOAD_CURR
NEXT_FLD0
NEXT_FLD1
L4
S0
S3
S5
S5_L4
VCC
C722
C723
C724
C725
C726
C727
C728
C729
C730
C731
C732
C733
C734
C735
C736
C737
C738
C739
C740
C741
C742
C743
C744
C745
C746
C747
C748
C749
C750
C751
C752
C753
C754
C755
C756
C757
C758
C759
C760
C761
0.01

SERVO/AT (S4 4/16) CONTROL AMP 1 SCHEMATIC DIAGRAM

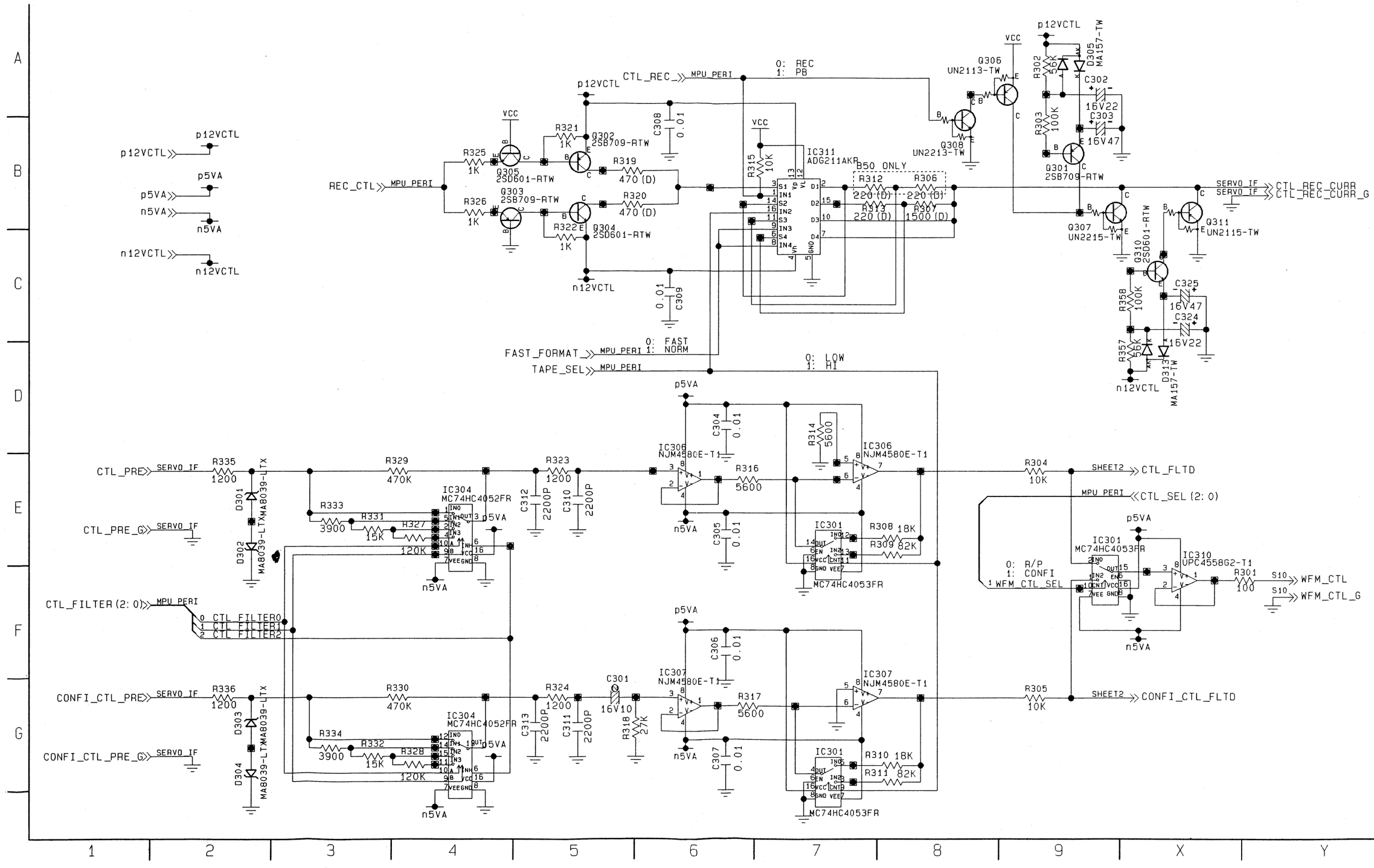

SERVO/AT (S4 5/16) CONTROL AMP 2 SCHEMATIC DIAGRAM

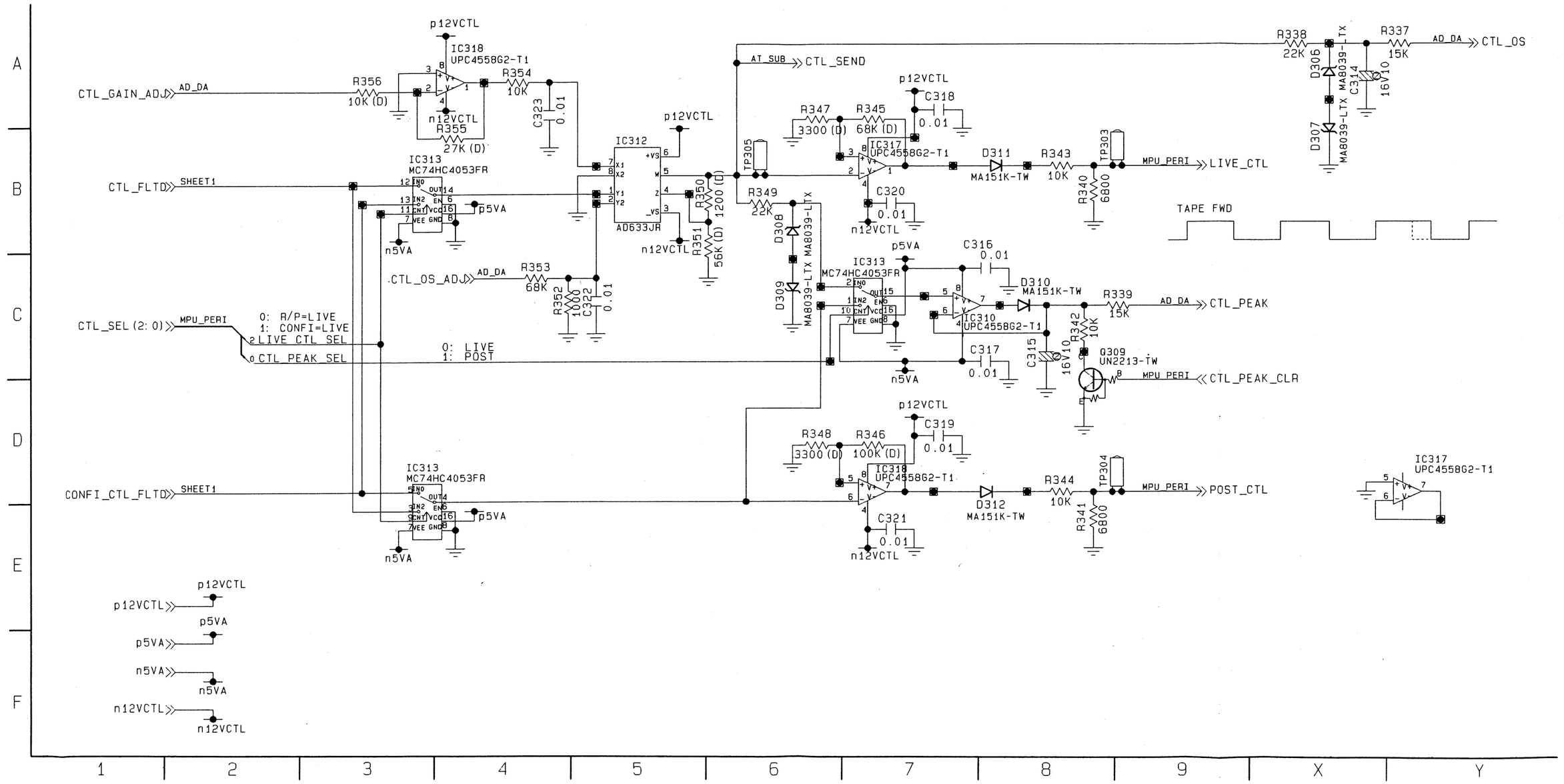

SERVO/AT (S4 6/16) CAPSTAN FG AMP 1 SCHEMATIC DIAGRAM

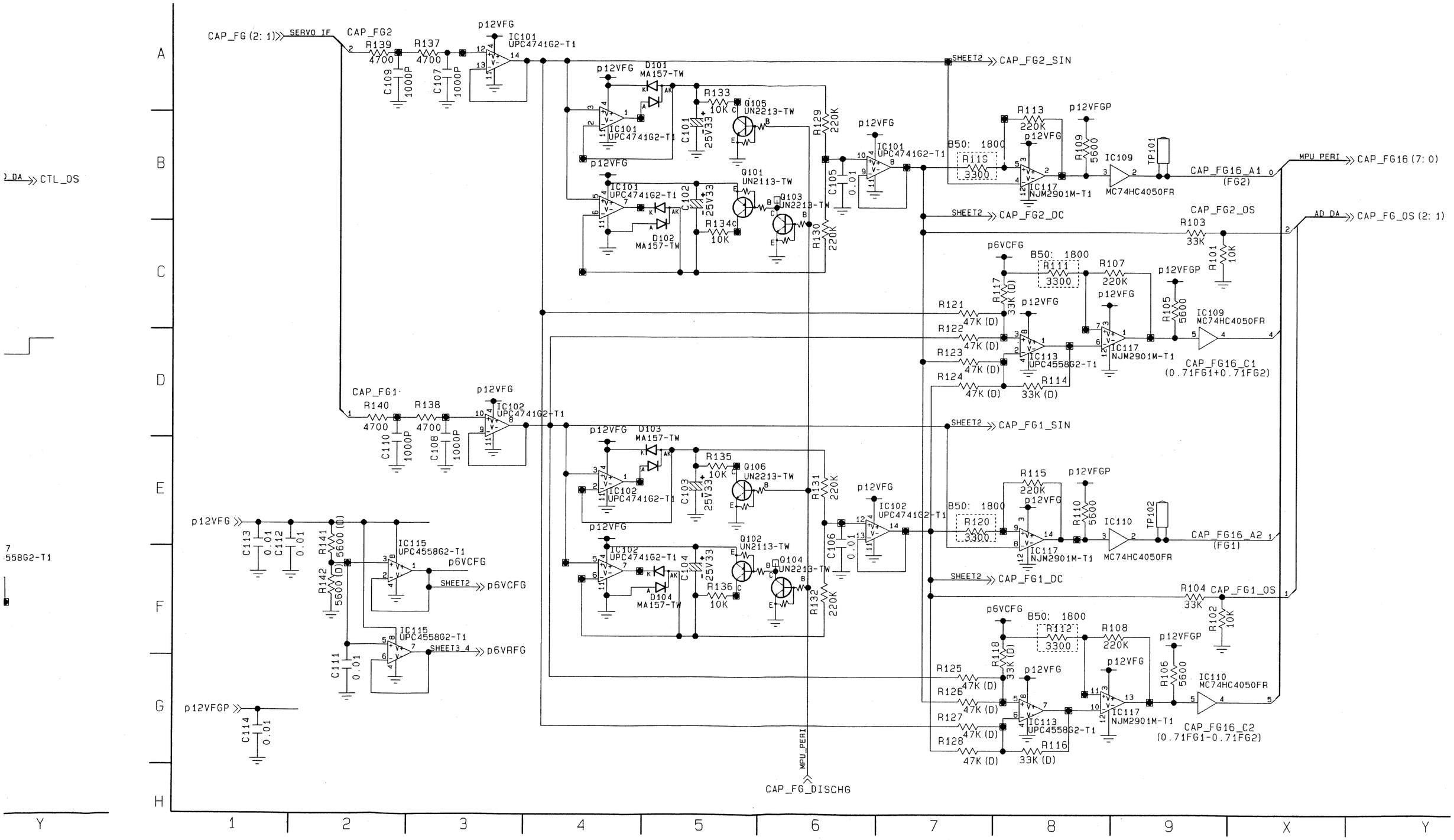

SERVO/AT (S4 7/16) CAPSTAN FG AMP 2 SCHEMATIC DIAGRAM

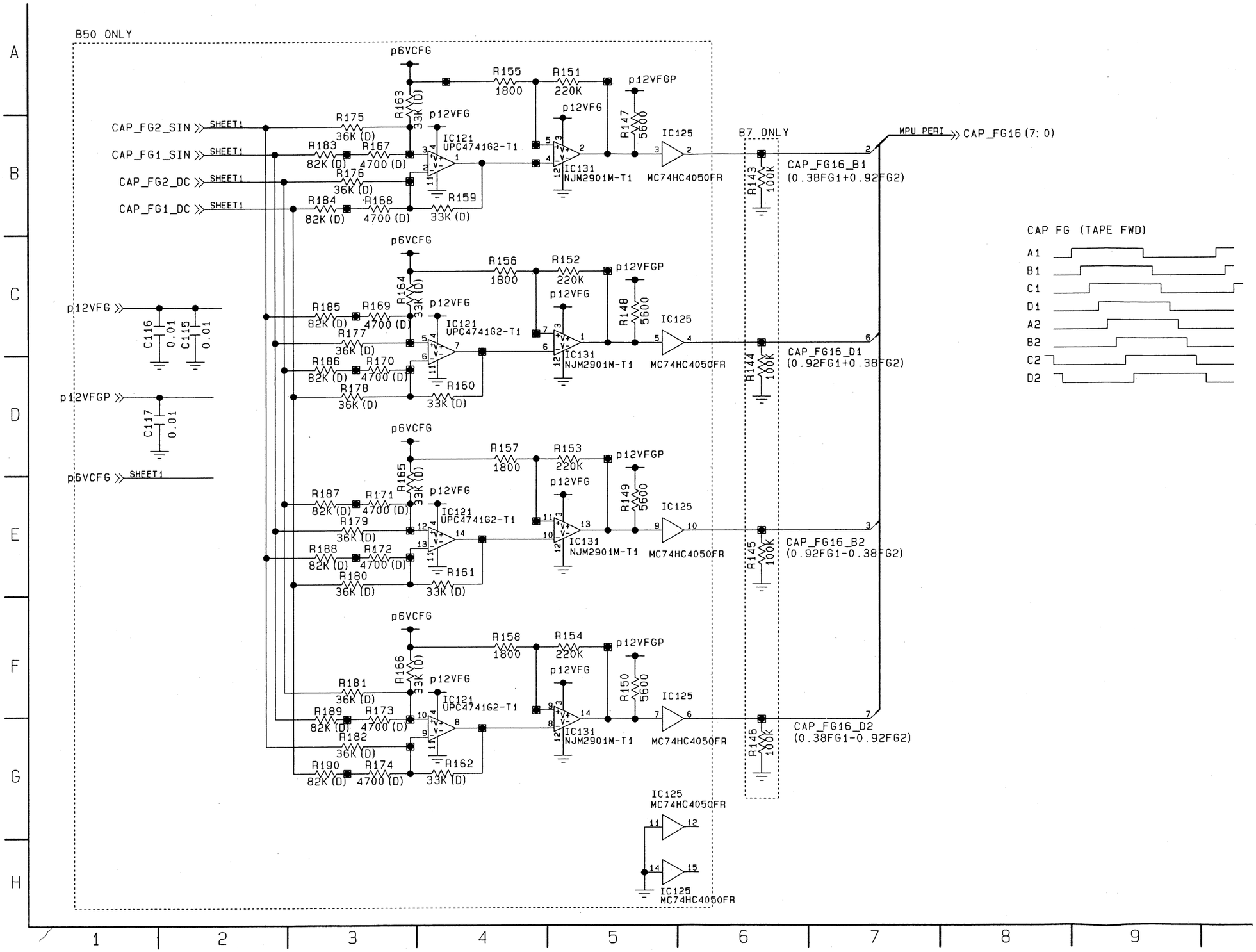

S_REEL_FG (2: 1)

REVERSE SIDE

SERVO/AT (S4 8/16) CAPSTAN FG AMP 3 SCHEMATIC DIAGRAM

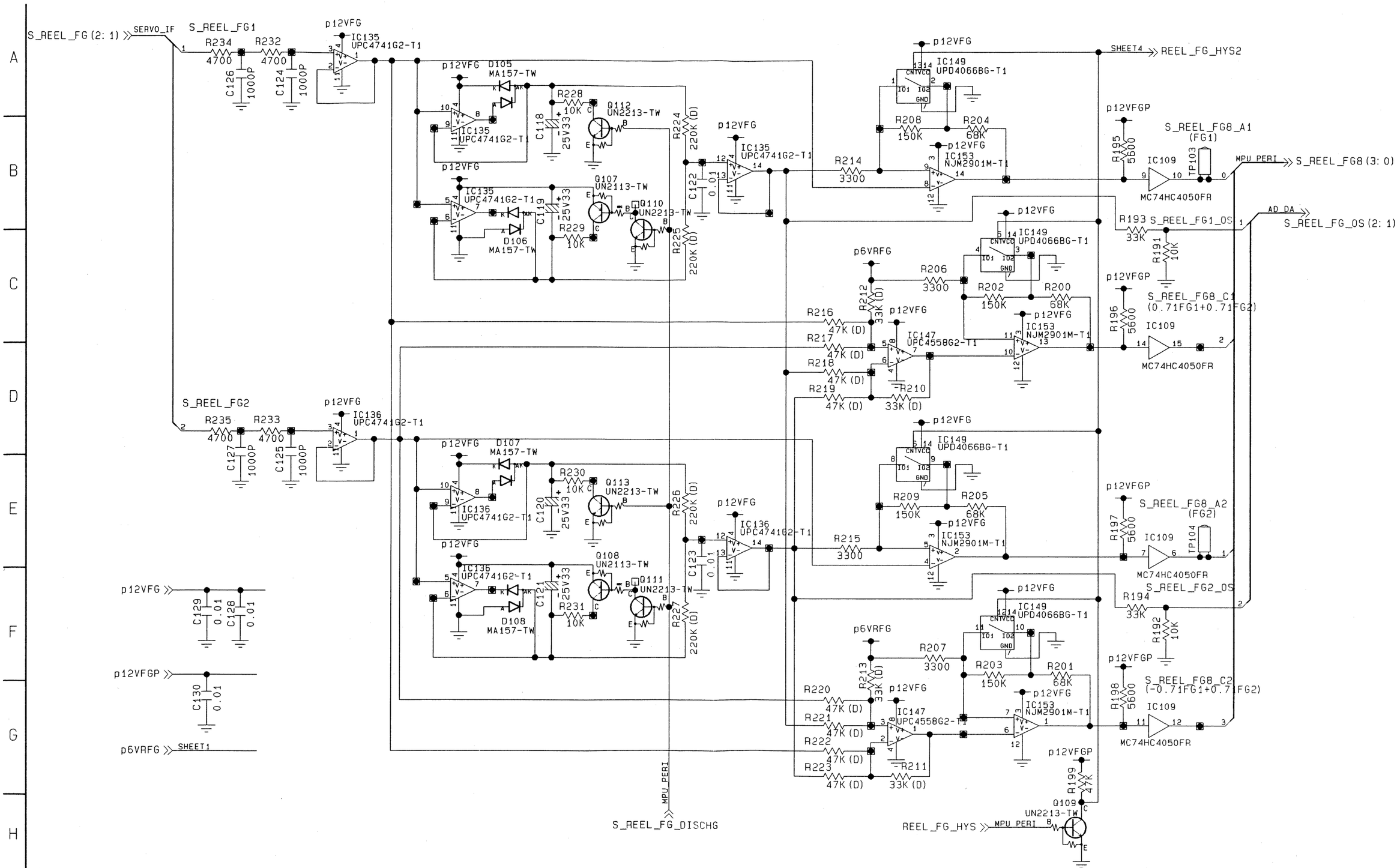

SERVO/AT (S4 9/16) CAPSTAN FG AMP 4 SCHEMATIC DIAGRAM

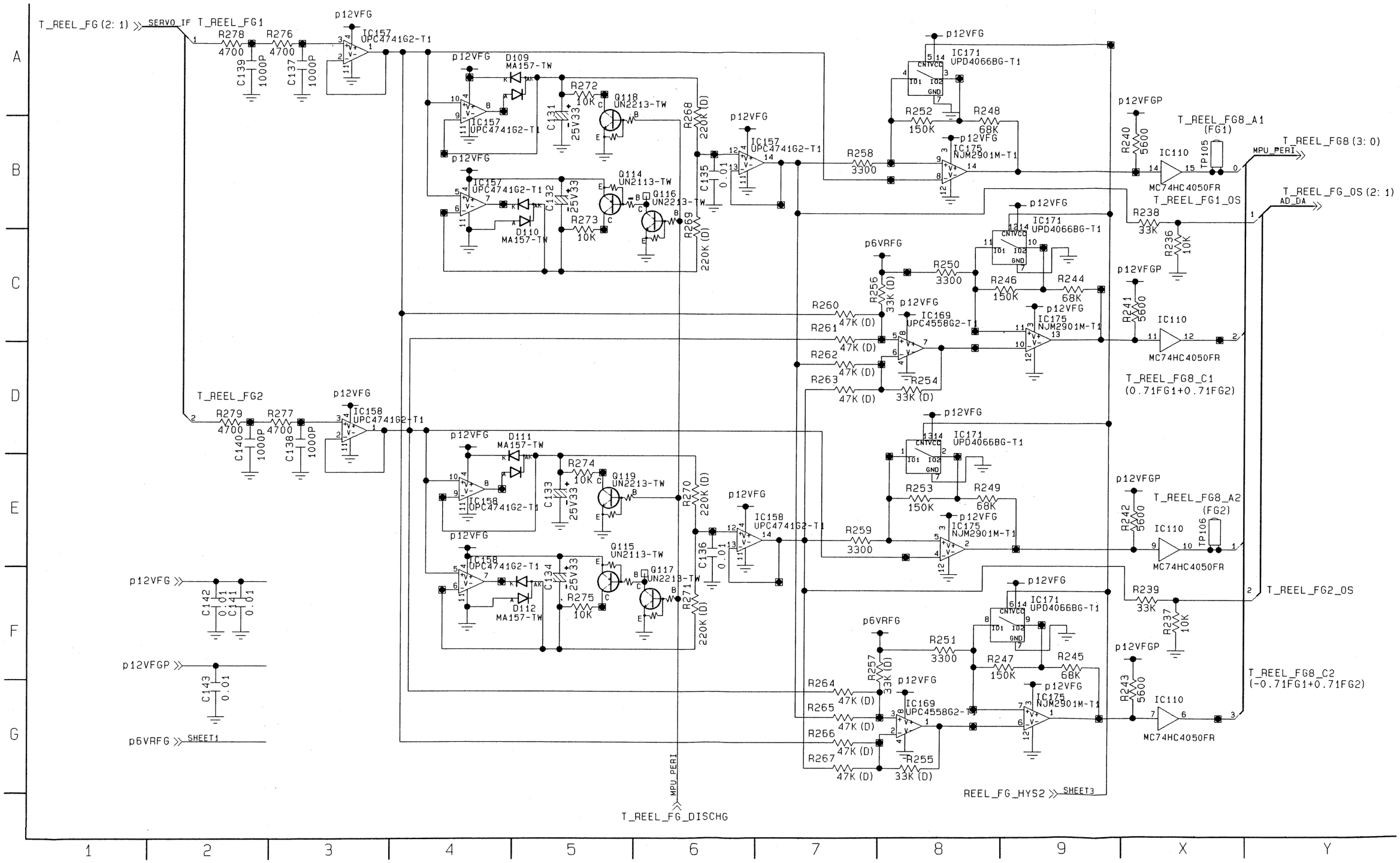

SERVO/AT (S4 10/16) AD, DA SCHEMATIC DIAGRAM

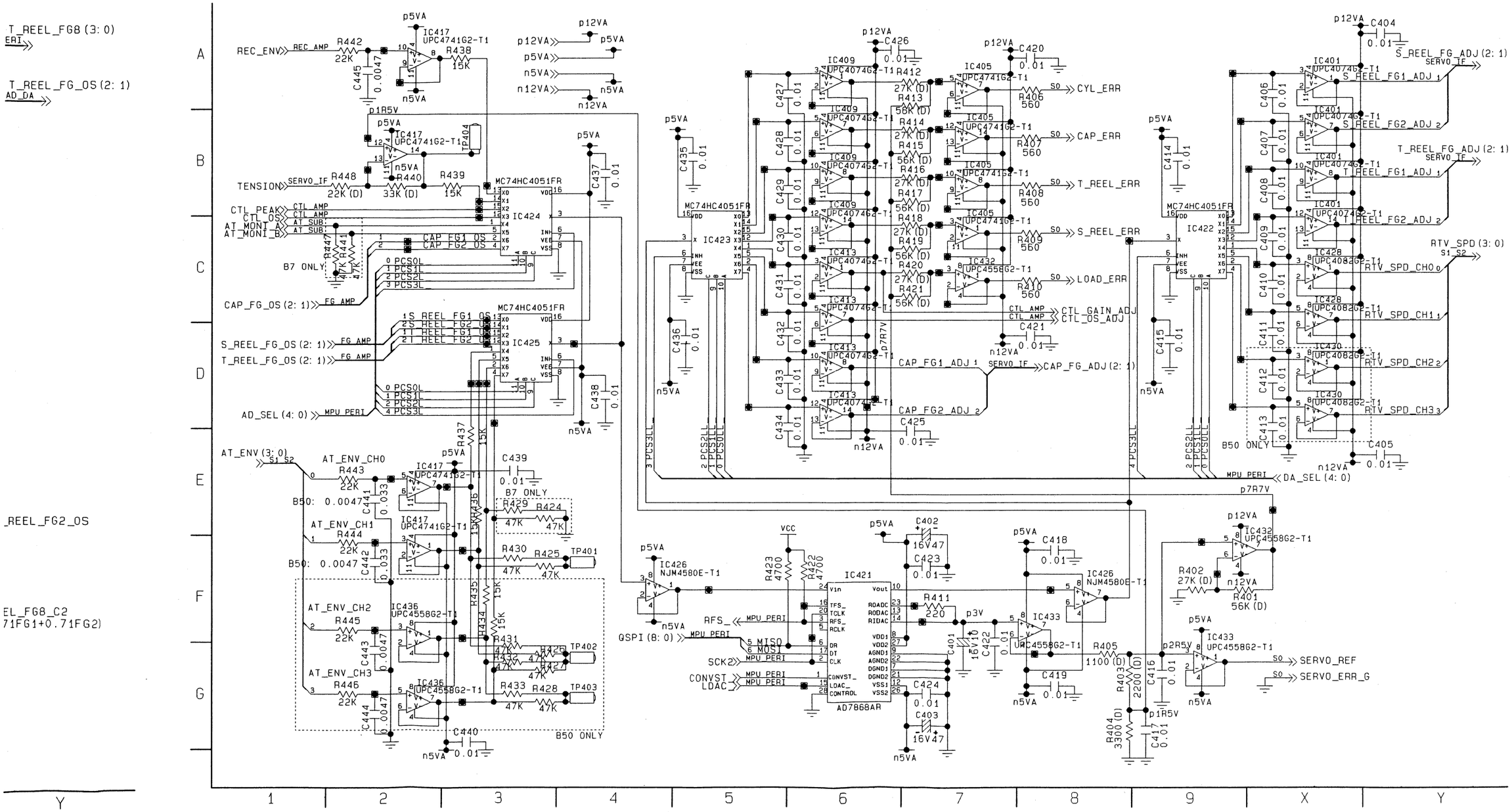

SERVO/AT (S4 11/16) LOADING FG AMP SCHEMATIC DIAGRAM

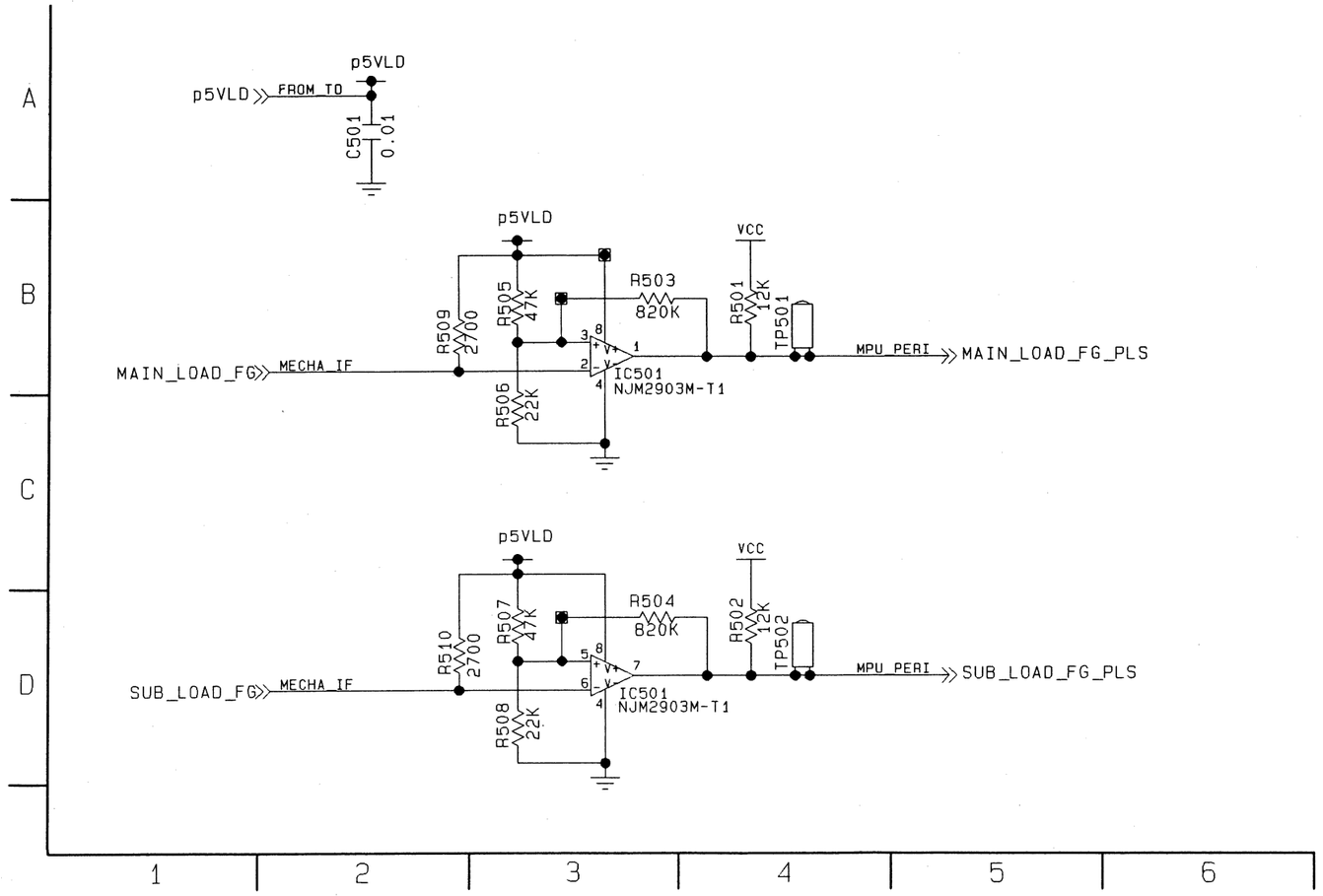

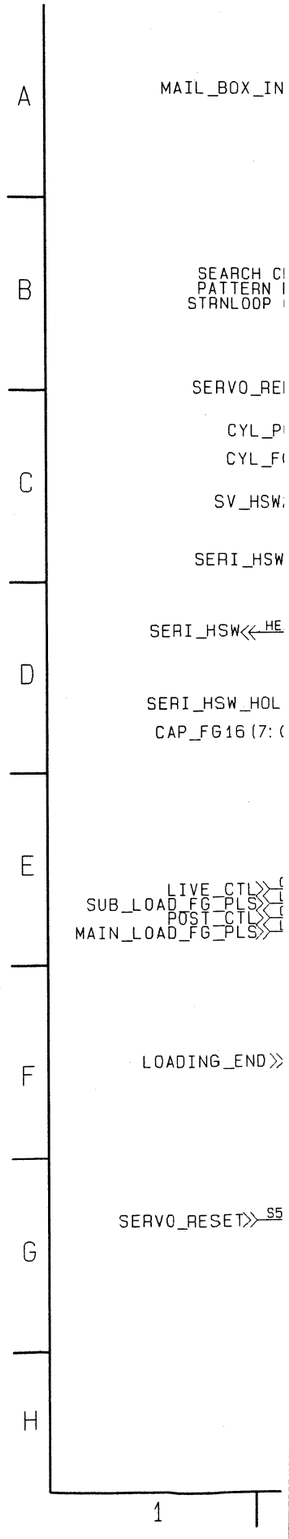

REVERSE SIDE

SERVO/AT (S4 12/16) MPU PERI 1 SCHEMATIC DIAGRAM

IC3	B7	B50
PAL	VSI1326	
NTSC	VSI1327	

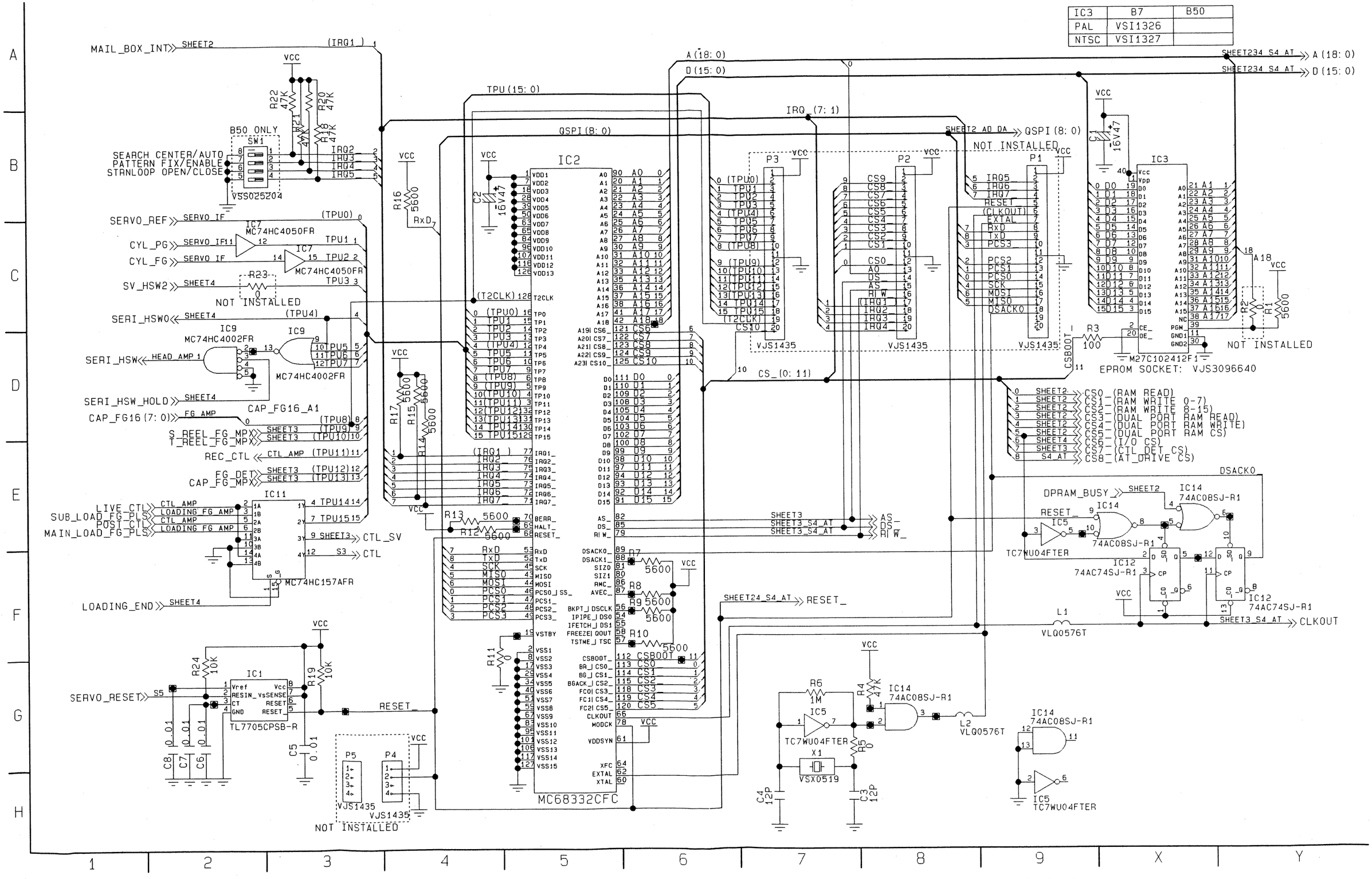

SERVO/AT (S4 13/16) MPU PERI 2 SCHEMATIC DIAGRAM

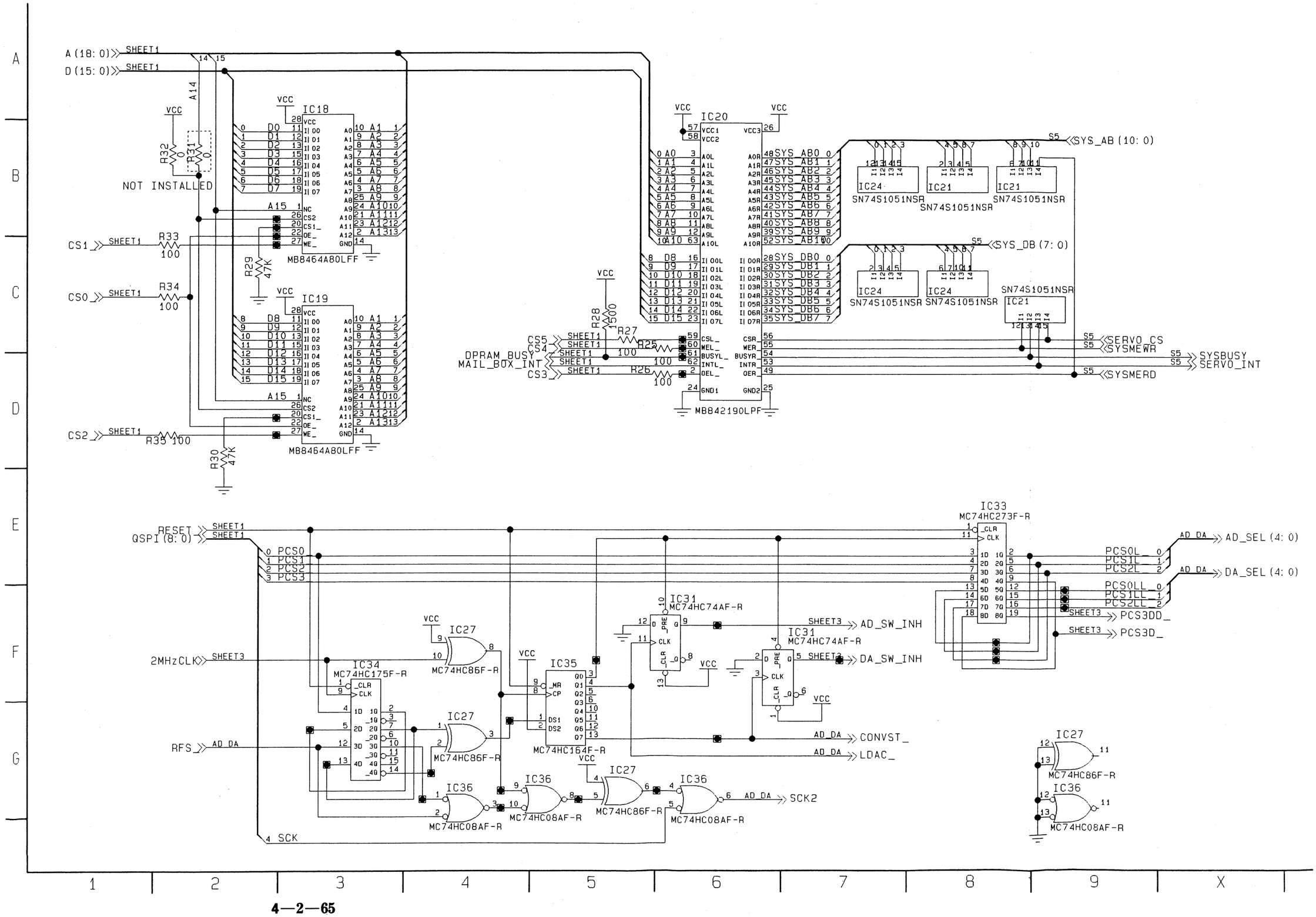

SERVO/AT (S4 14/16) MPU PERI 3 SCHEMATIC DIAGRAM

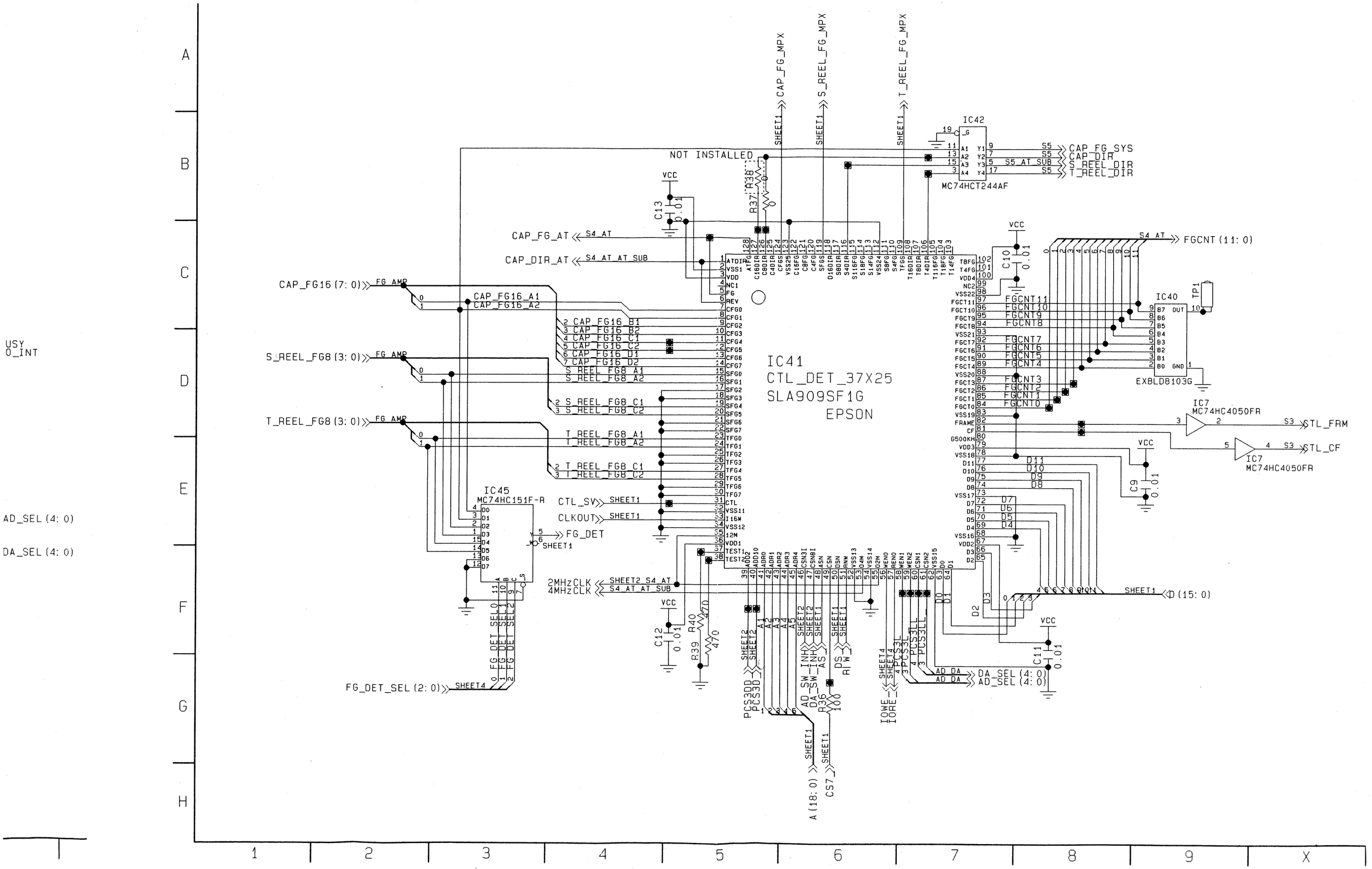

USY
O_INT

AD_SEL (4: 0)

DA_SEL (4: 0)

SERVO/AT (S4 15/16) MPU PERI 4 SCHEMATIC DIAGRAM

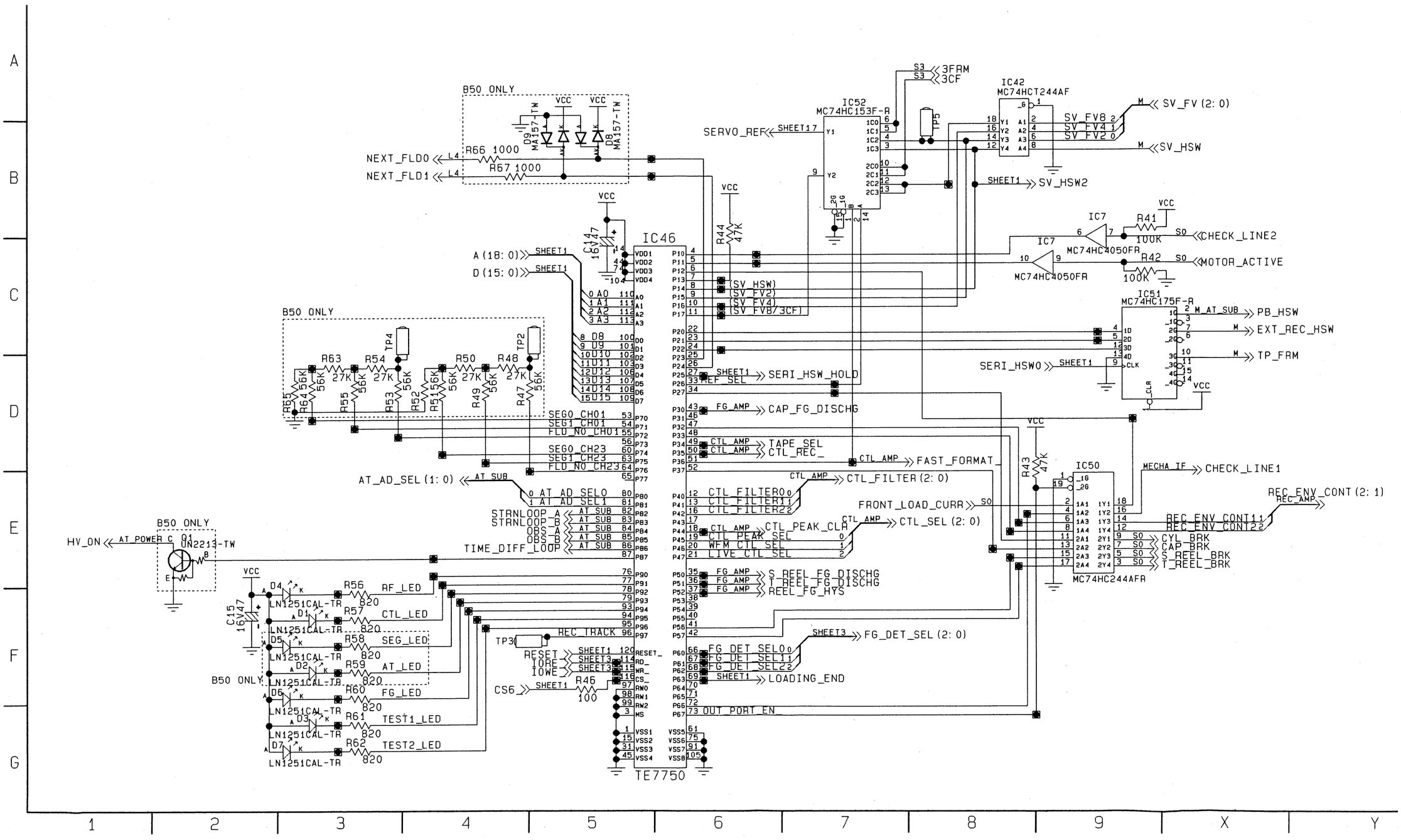

REVERSE SIDE

SERVO/AT (S4 16/16) AT DRIVE SCHEMATIC DIAGRAM

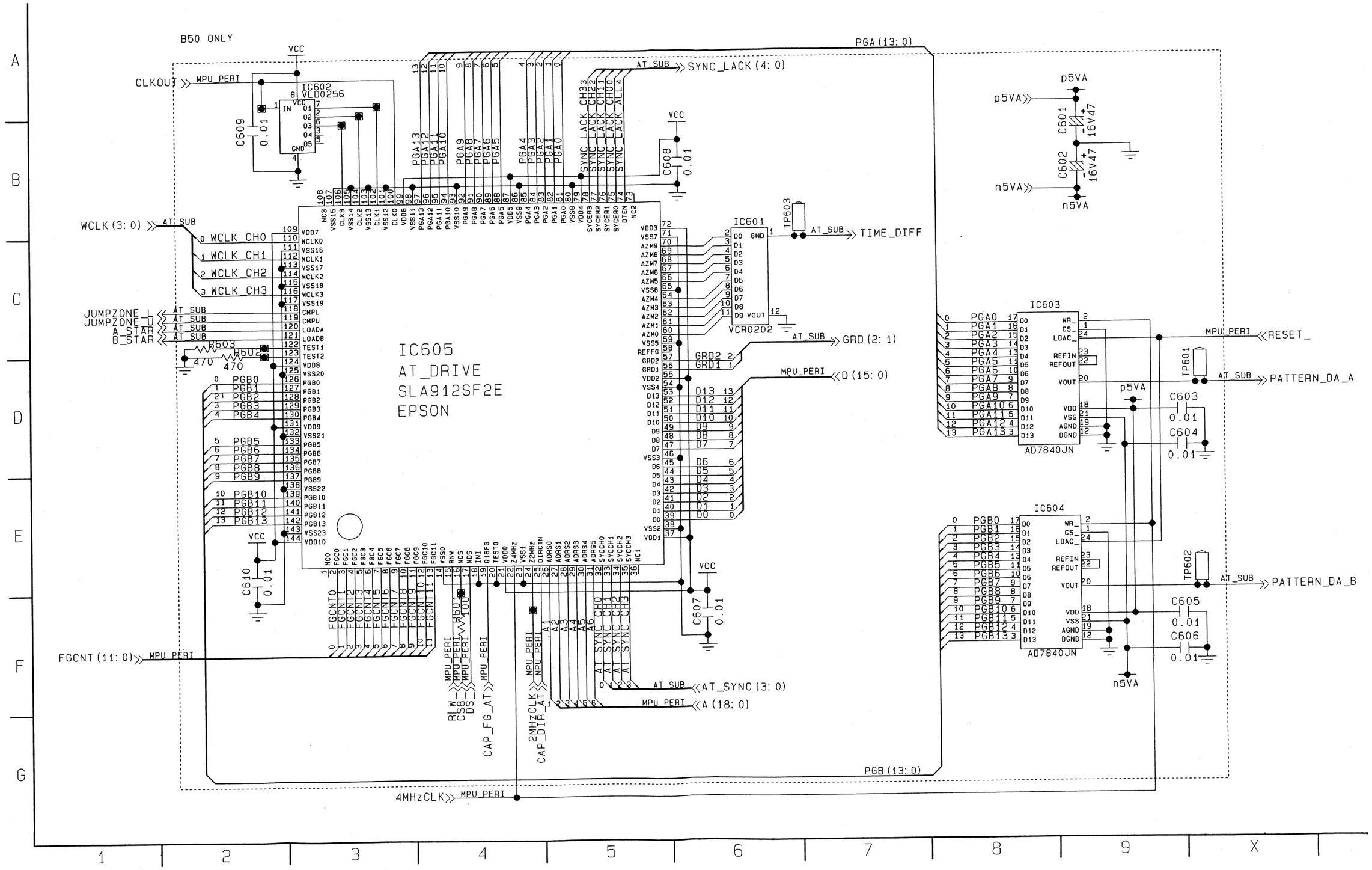

1)

SYSTEM CONTROL (S5 1/9) SCHEMATIC DIAGRAM

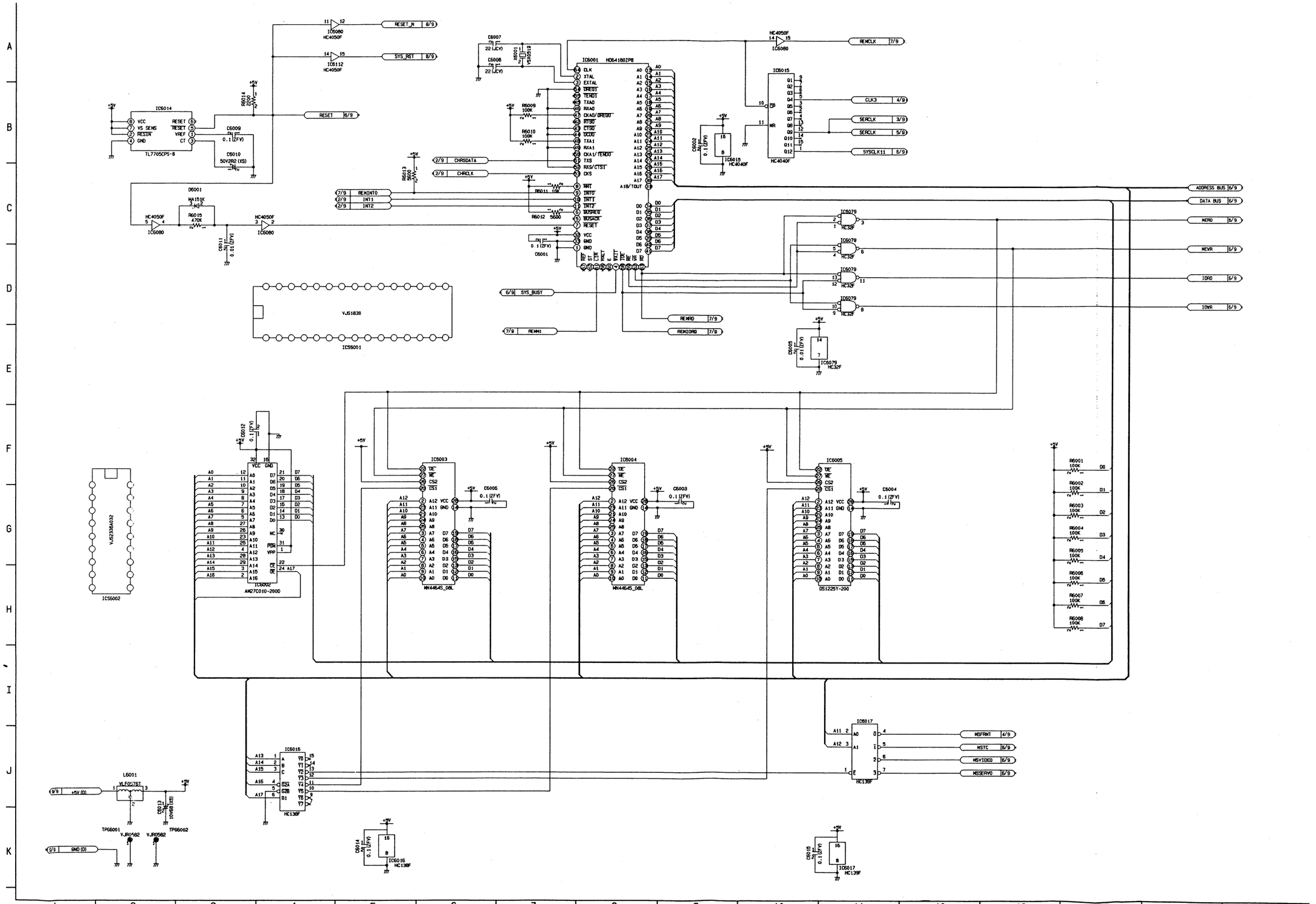

SYSTEM CONTROL (S5 2/9) SCHEMATIC DIAGRAM

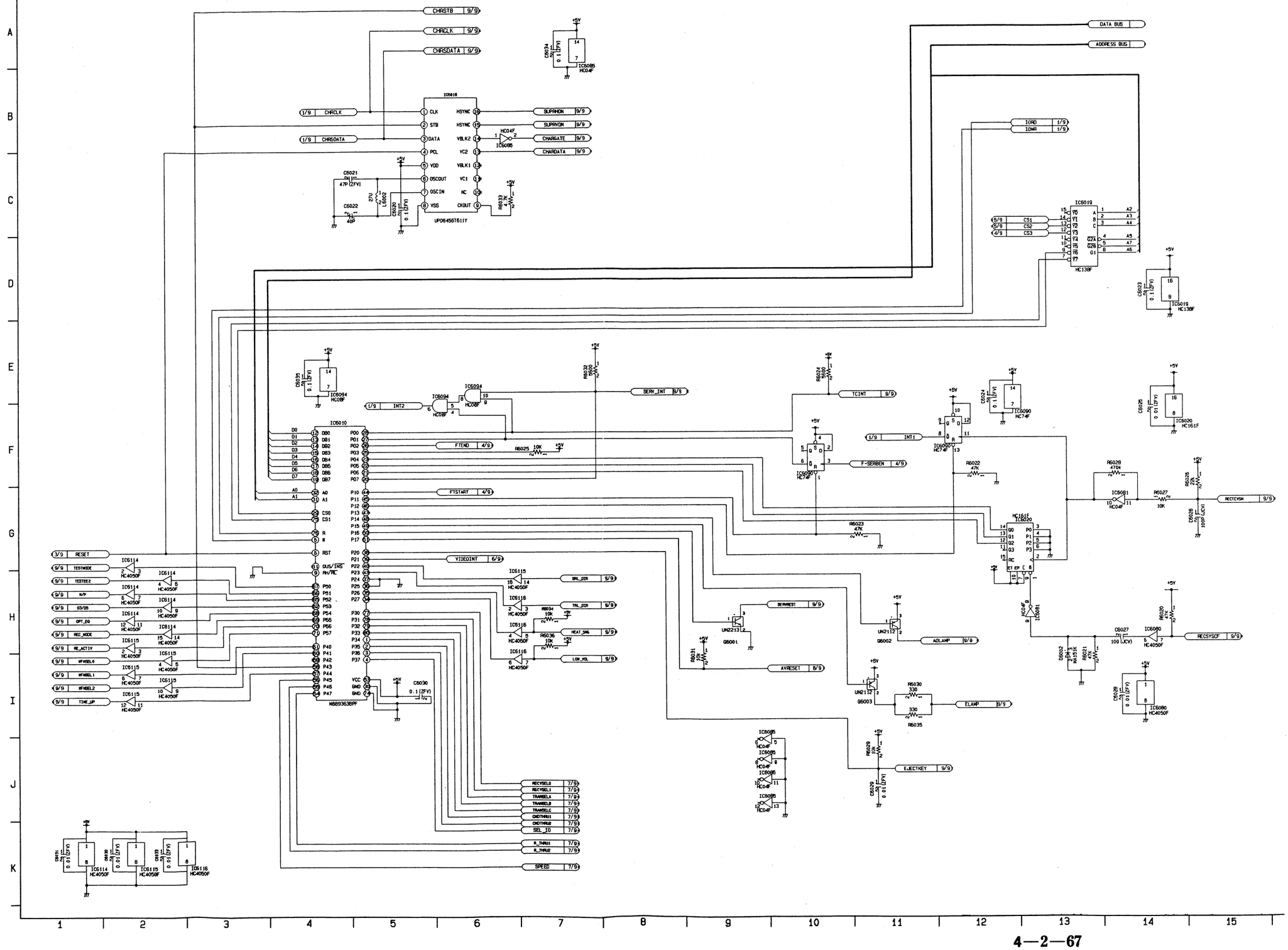

SYSTEM CONTROL (S5 3/9) SCHEMATIC DIAGRAM

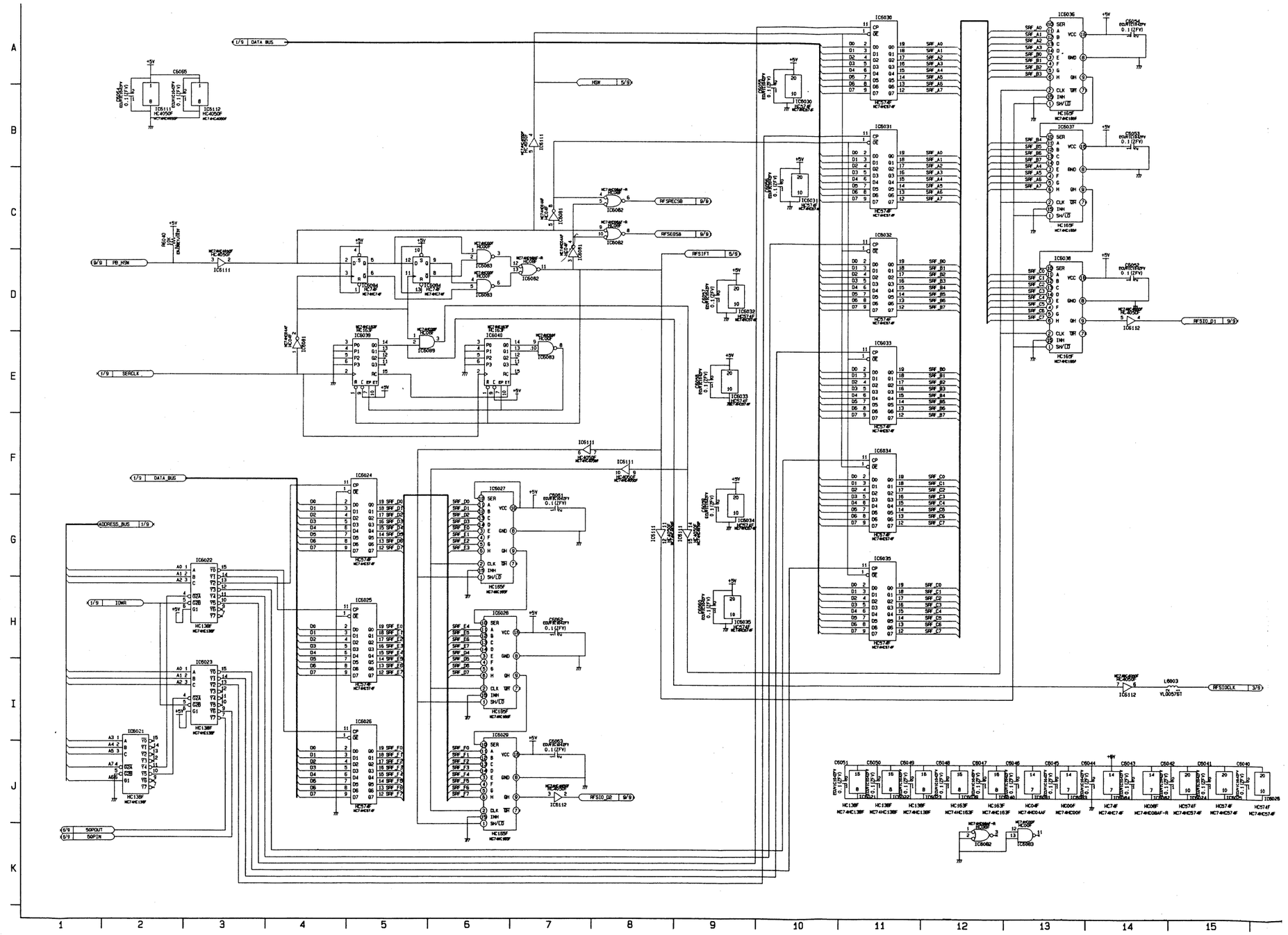

REVERSE SIDE

SYSTEM CONTROL (S5 1/9, 2/9)

SYSTEM CONT

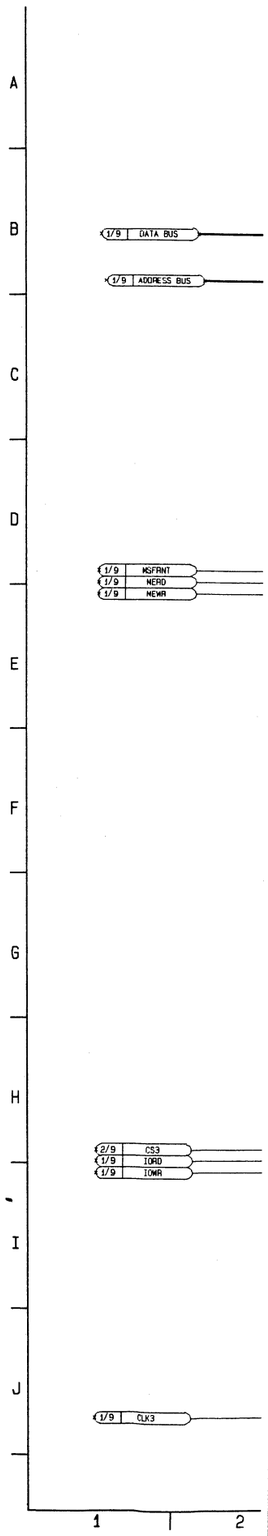

SYSTEM CONTROL (S5 4/9) SCHEMATIC DIAGRAM

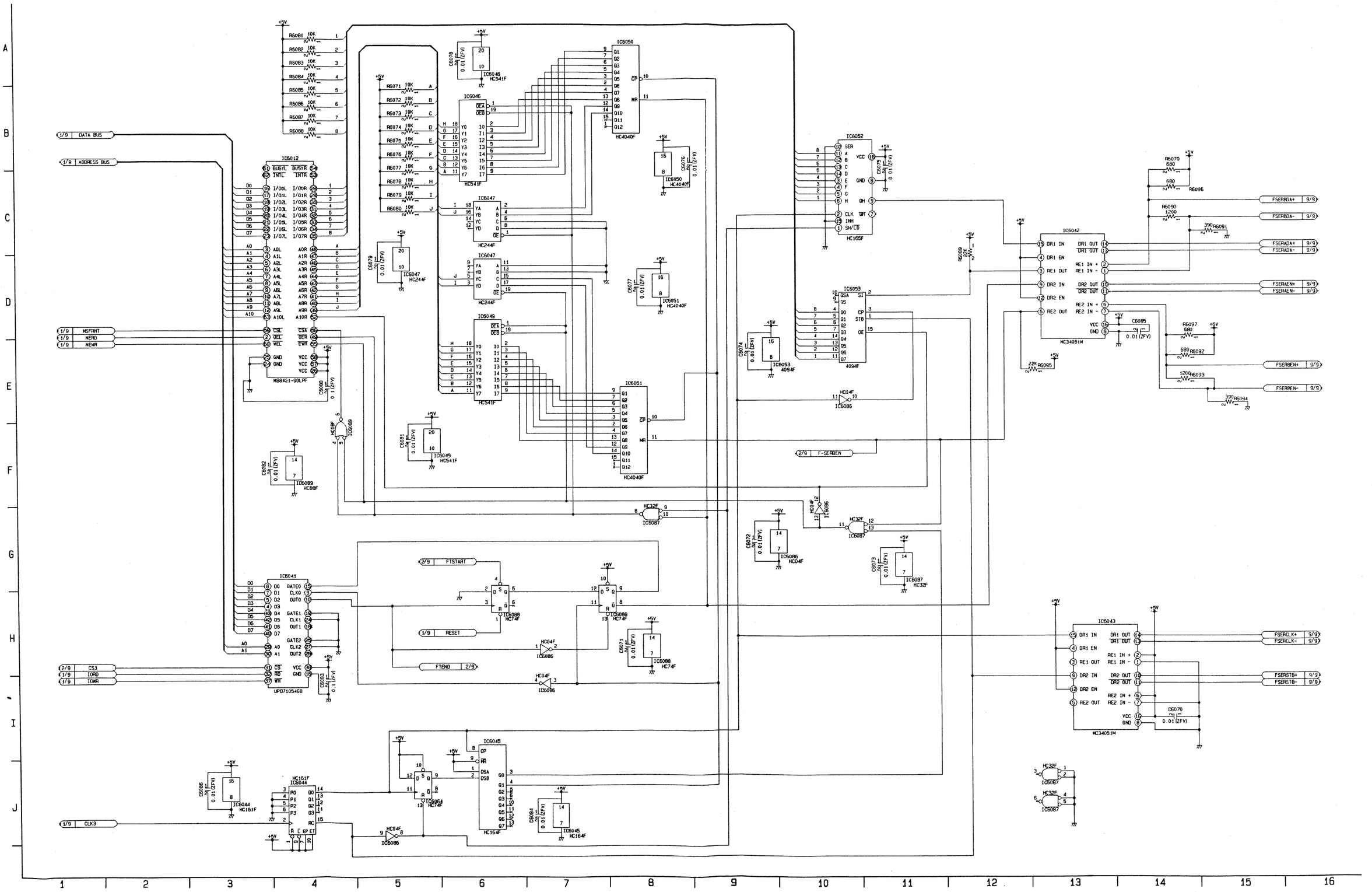

SYSTEM CONTROL (S5 5/9) SCHEMATIC DIAGRAM

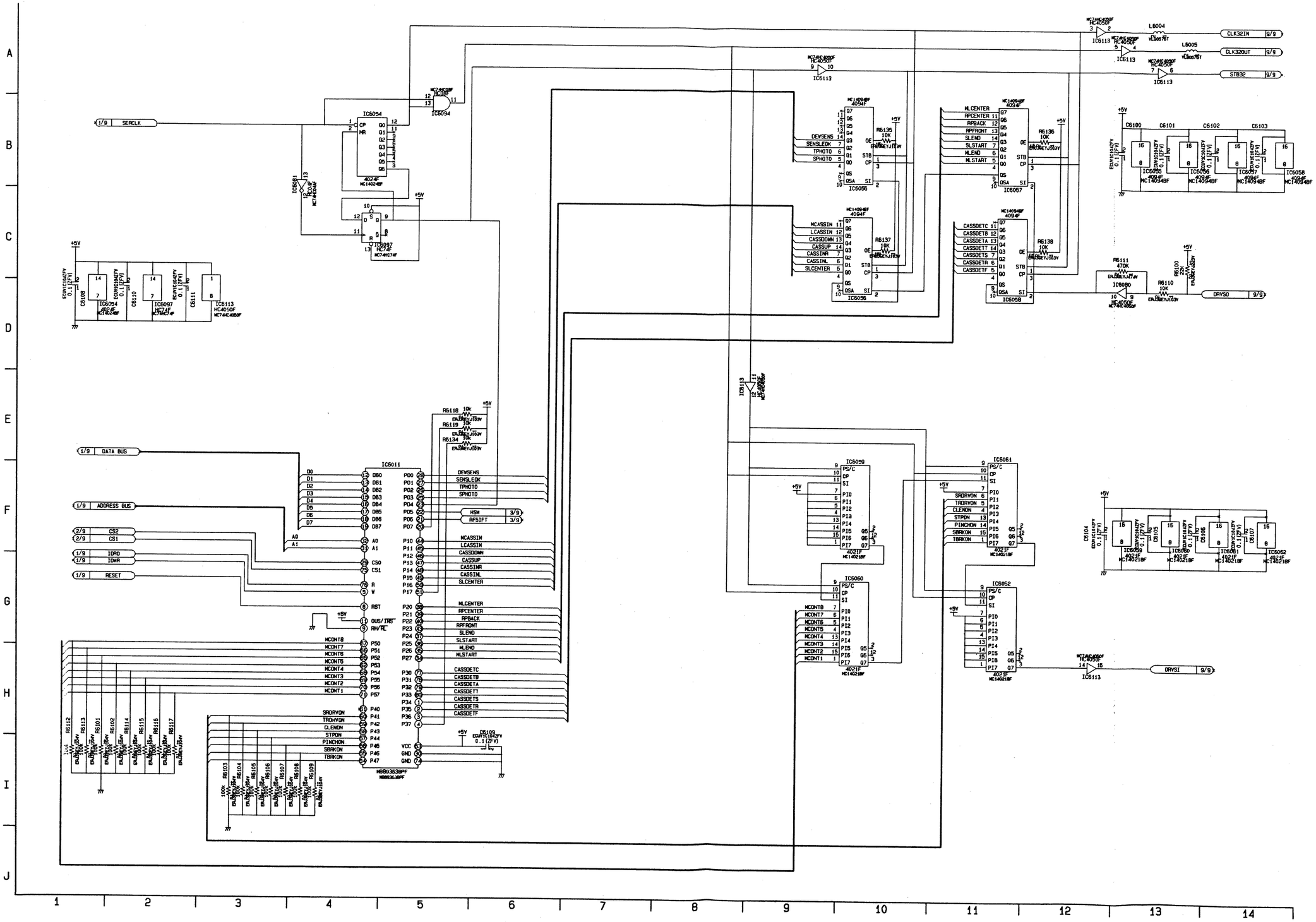

SYSTEM CONTROL (S5 6/9) SCHEMATIC DIAGRAM

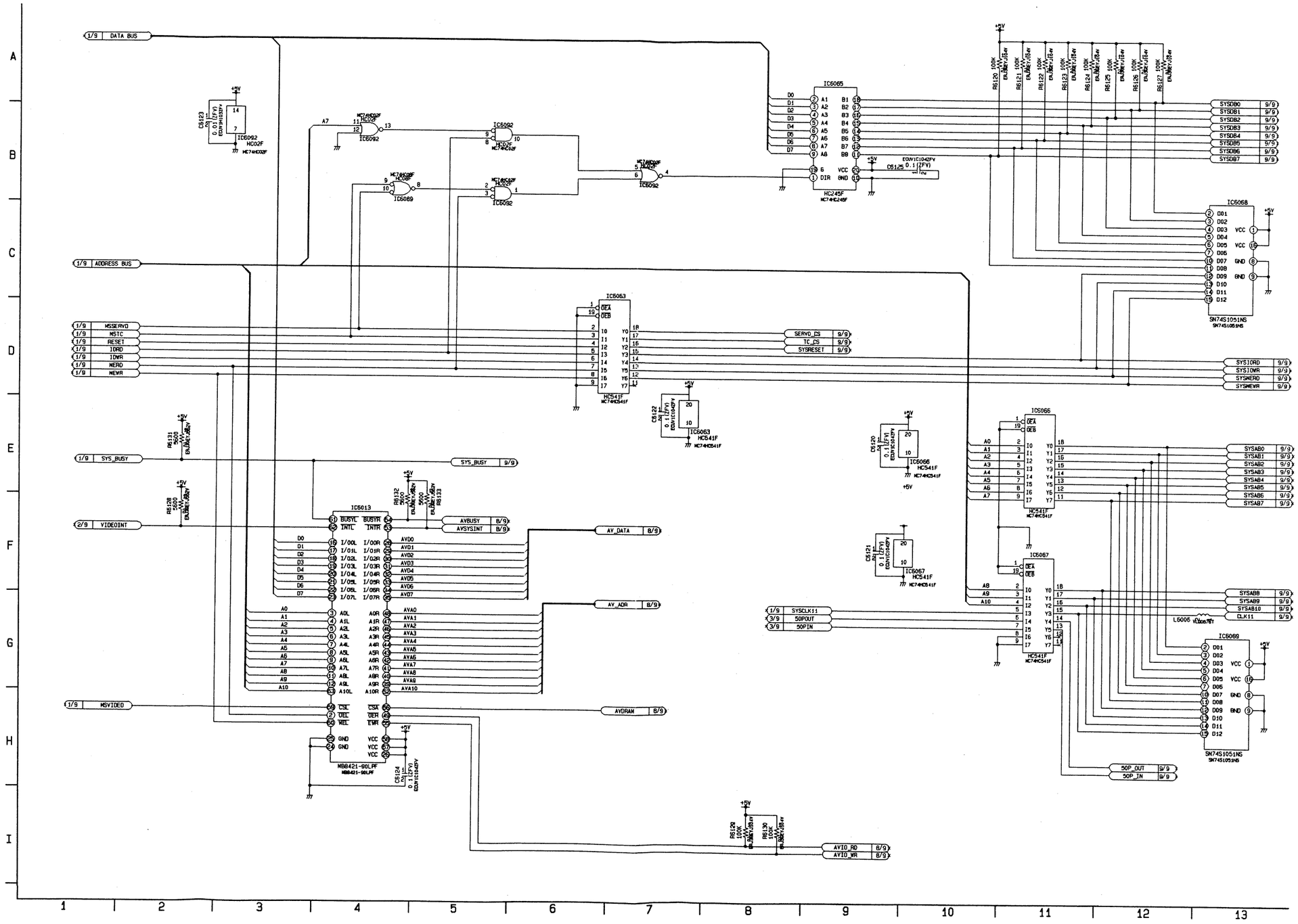

SYSTEM CONTROL (S5 7/9) SCHEMATIC DIAGRAM

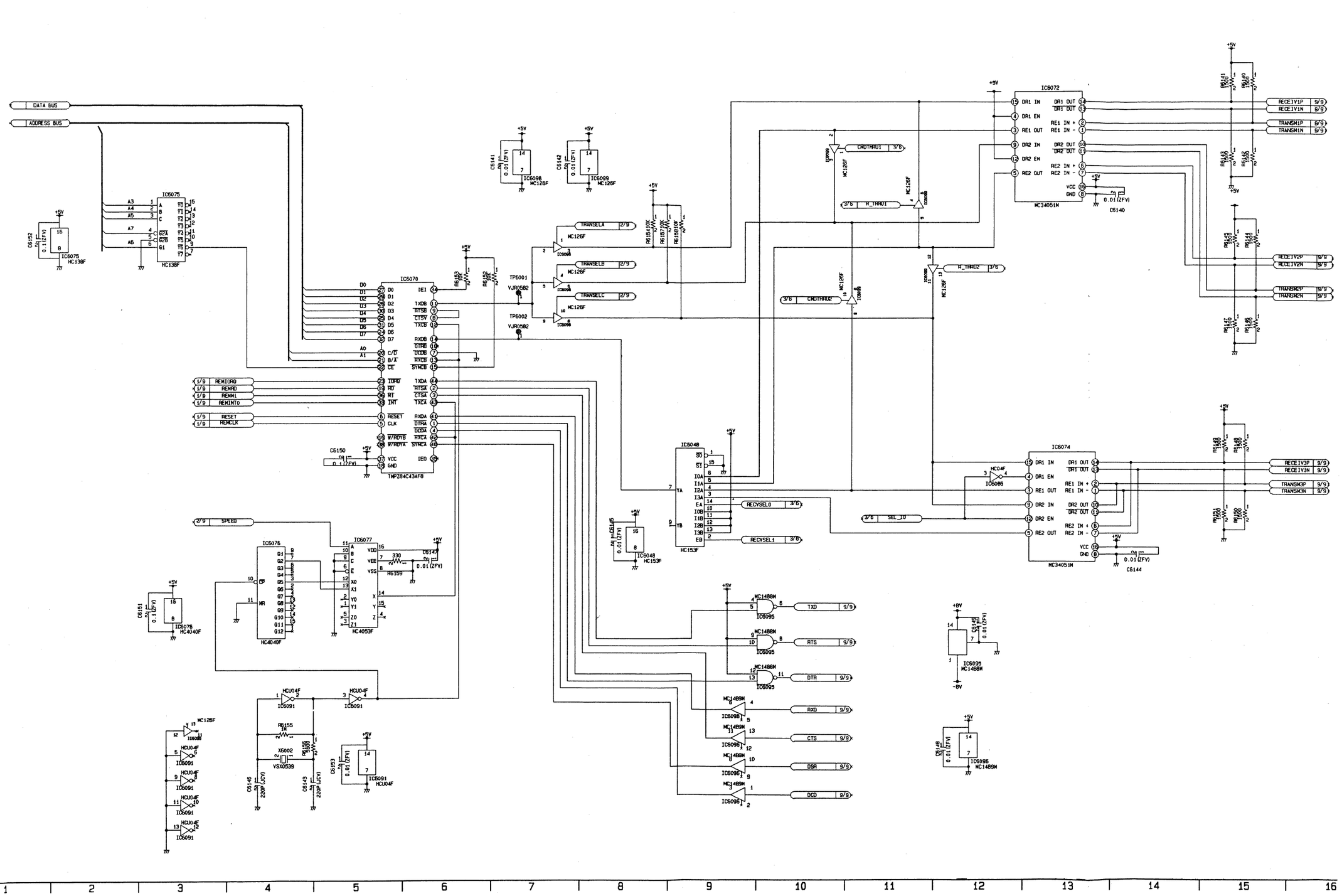

REVERSE SIDE

SYSTEM CONTROL (S5 5/9, 6/9)

SYSTEM CONTROL (S5 8/9) SCHEMATIC DIAGRAM

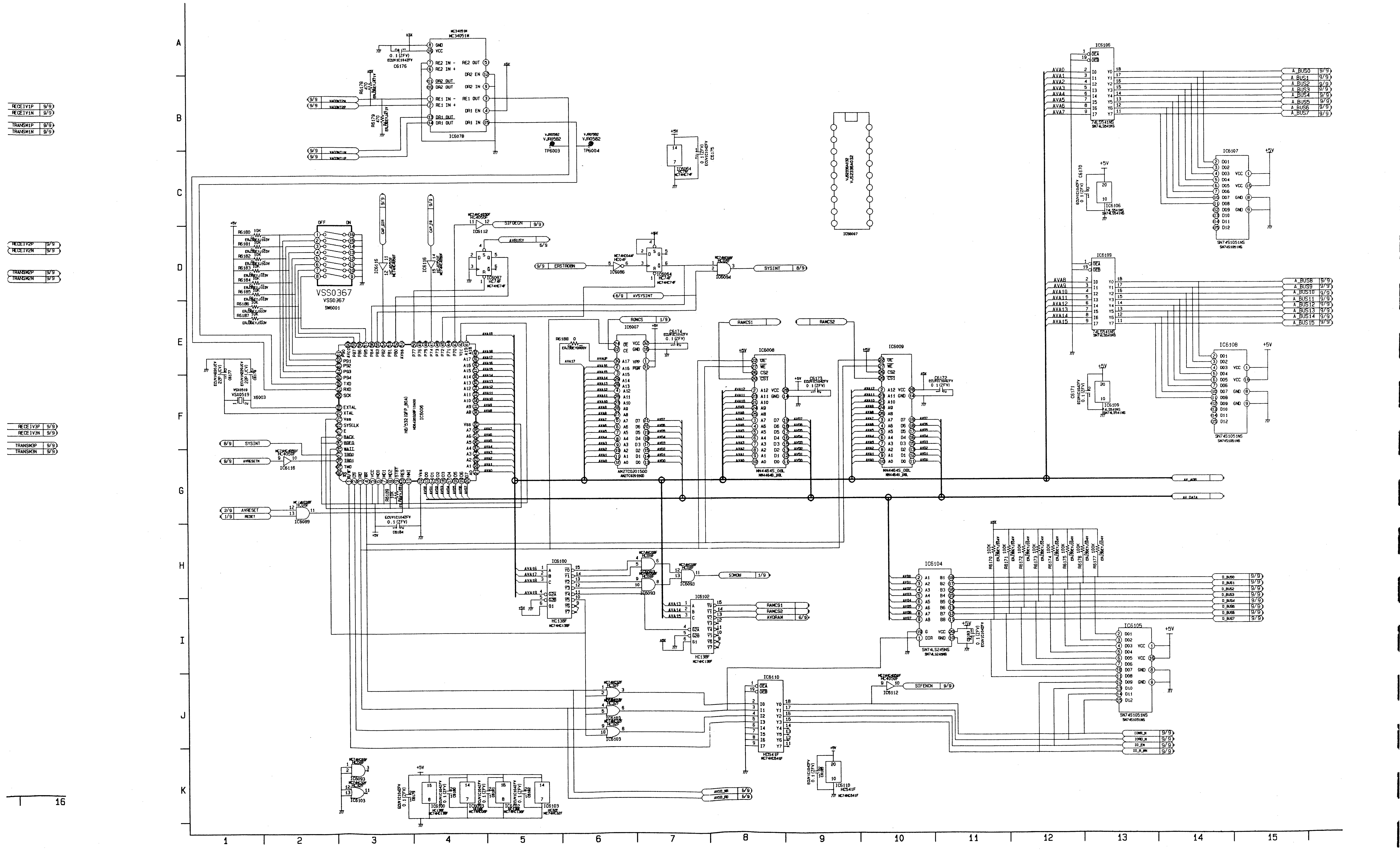

SYSTEM CONTROL (S5 9/9) SCHEMATIC DIAGRAM

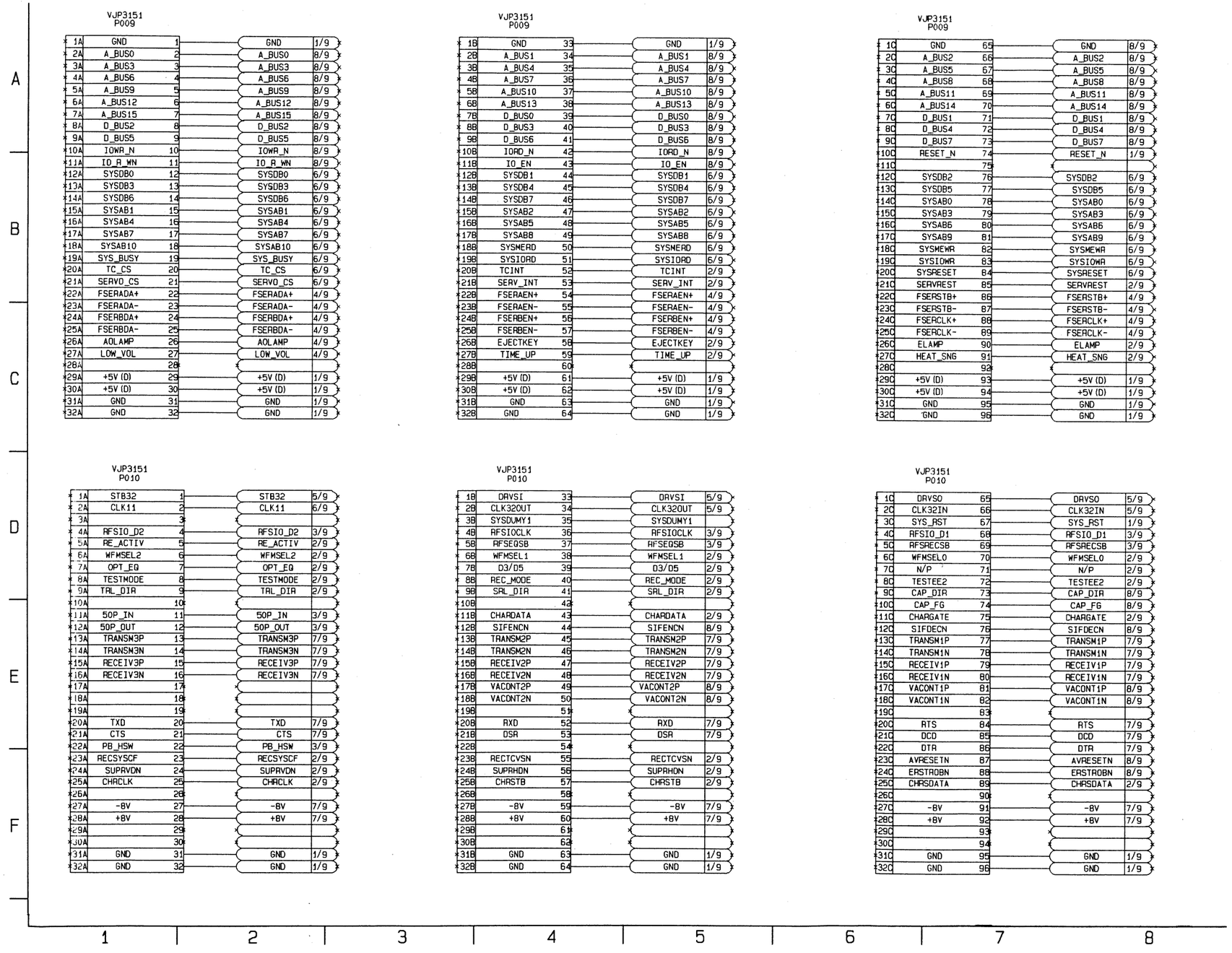

4—2—71

AUDIO D/A (S8 1/7) SCHEMATIC DIAGRAM

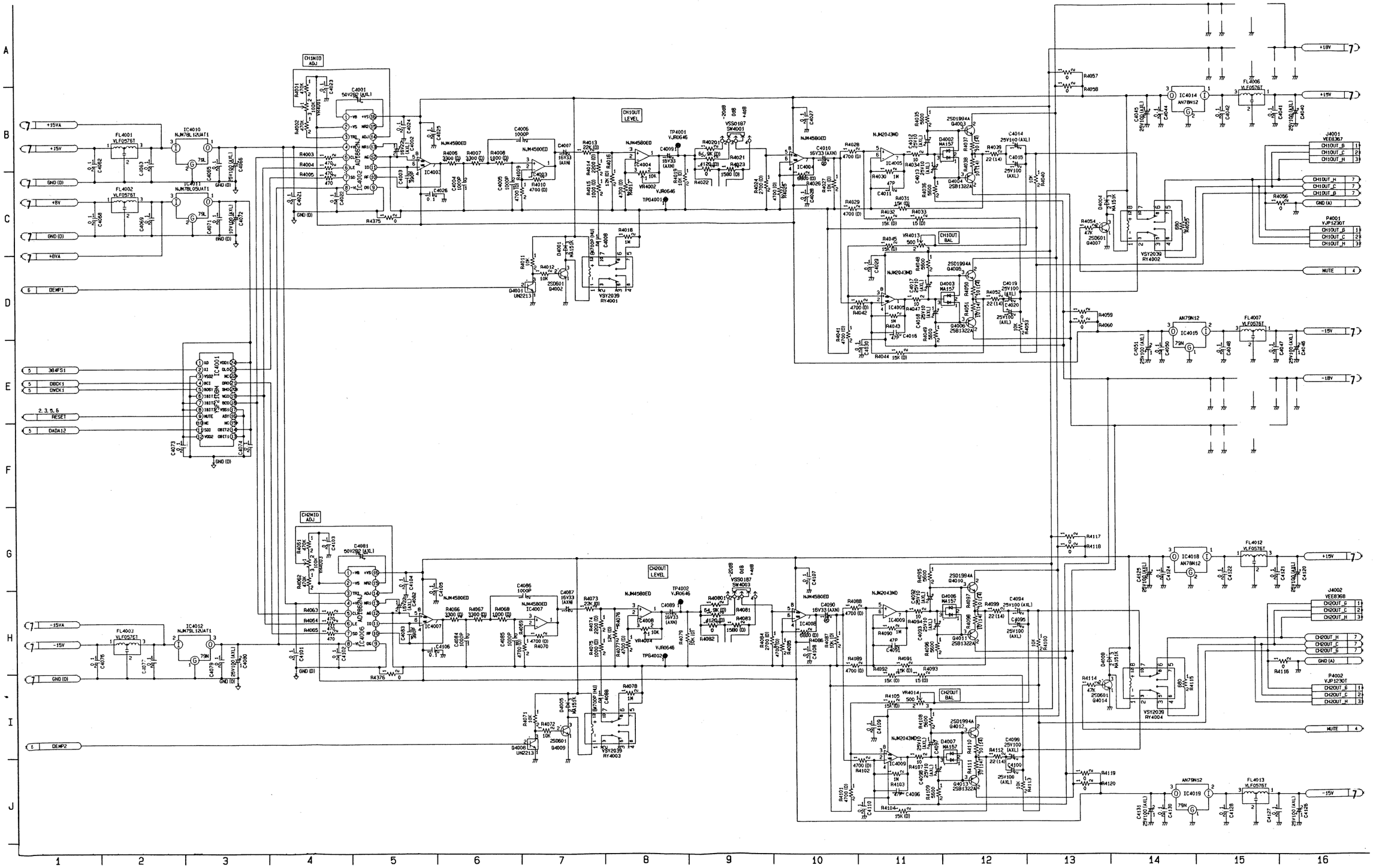

REVERSE SIDE

SYSTEM CONTROL (S5 9/9)

4—2—72

4—2—72

AUDIO D/A (S8 2/7) SCHEMATIC DIAGRAM

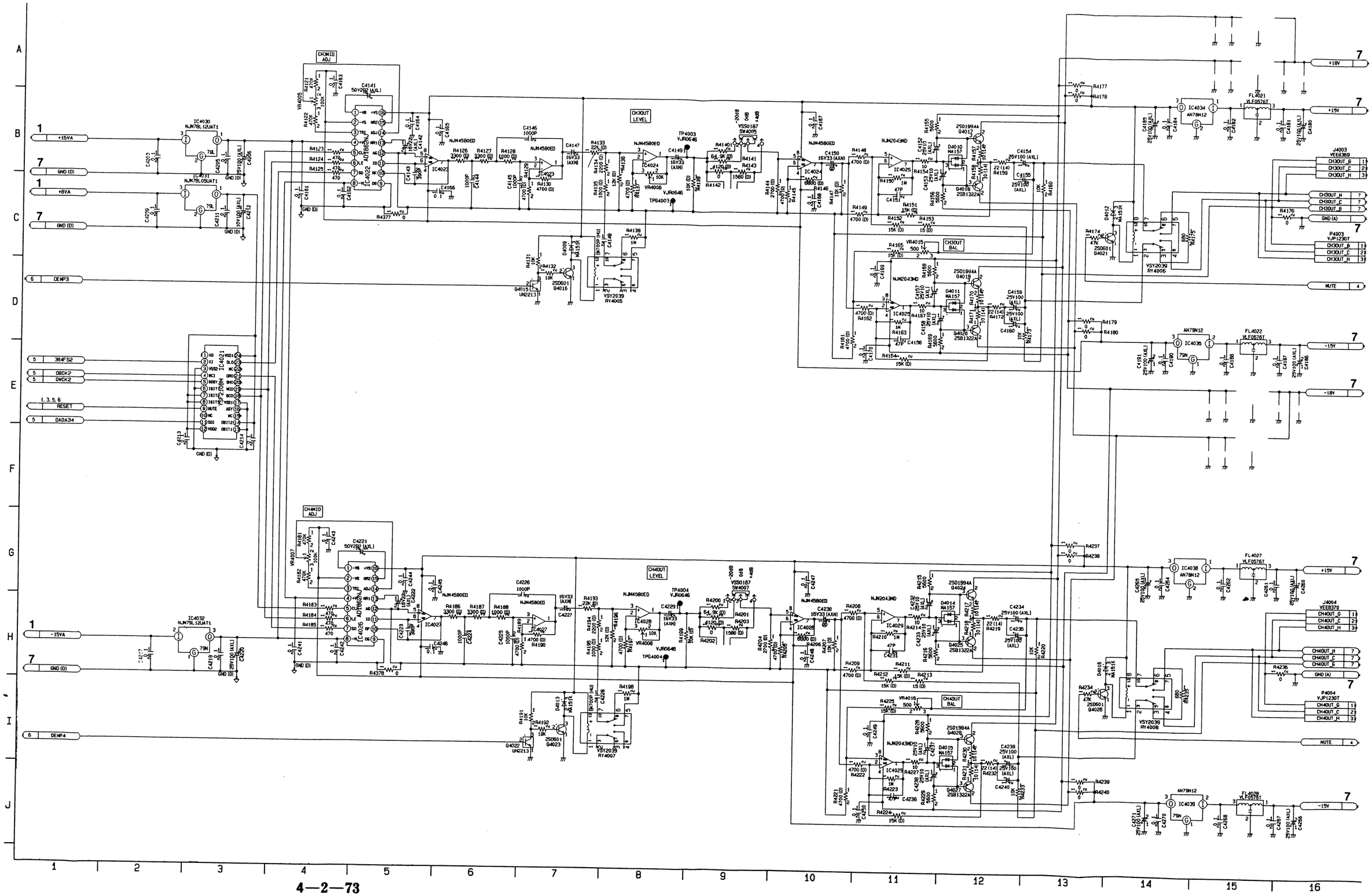

4—2—73

AUDIO D/A (S8 3/7) SCHEMATIC DIAGRAM

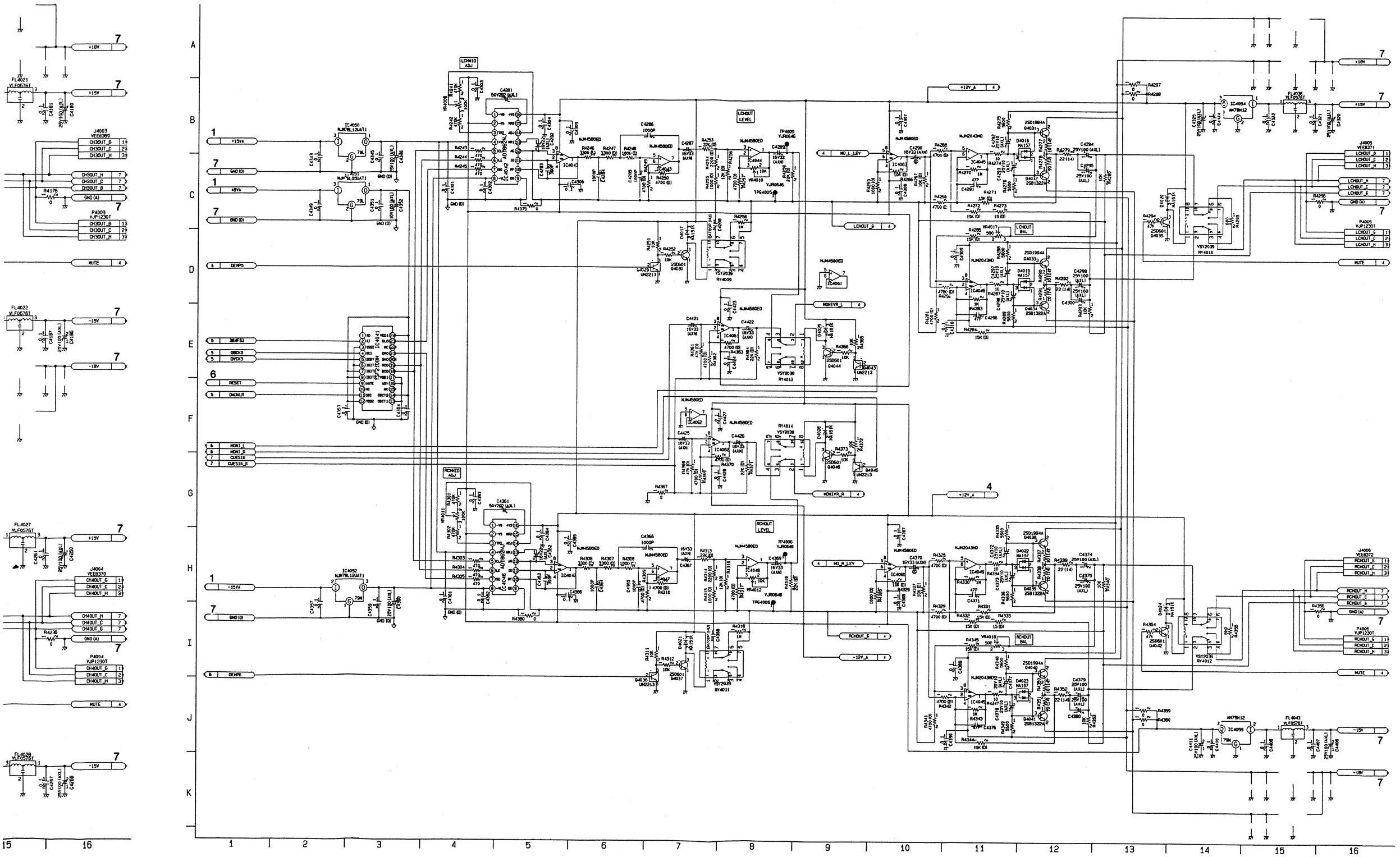

AUDIO D/A (S8 4/7) SCHEMATIC DIAGRAM

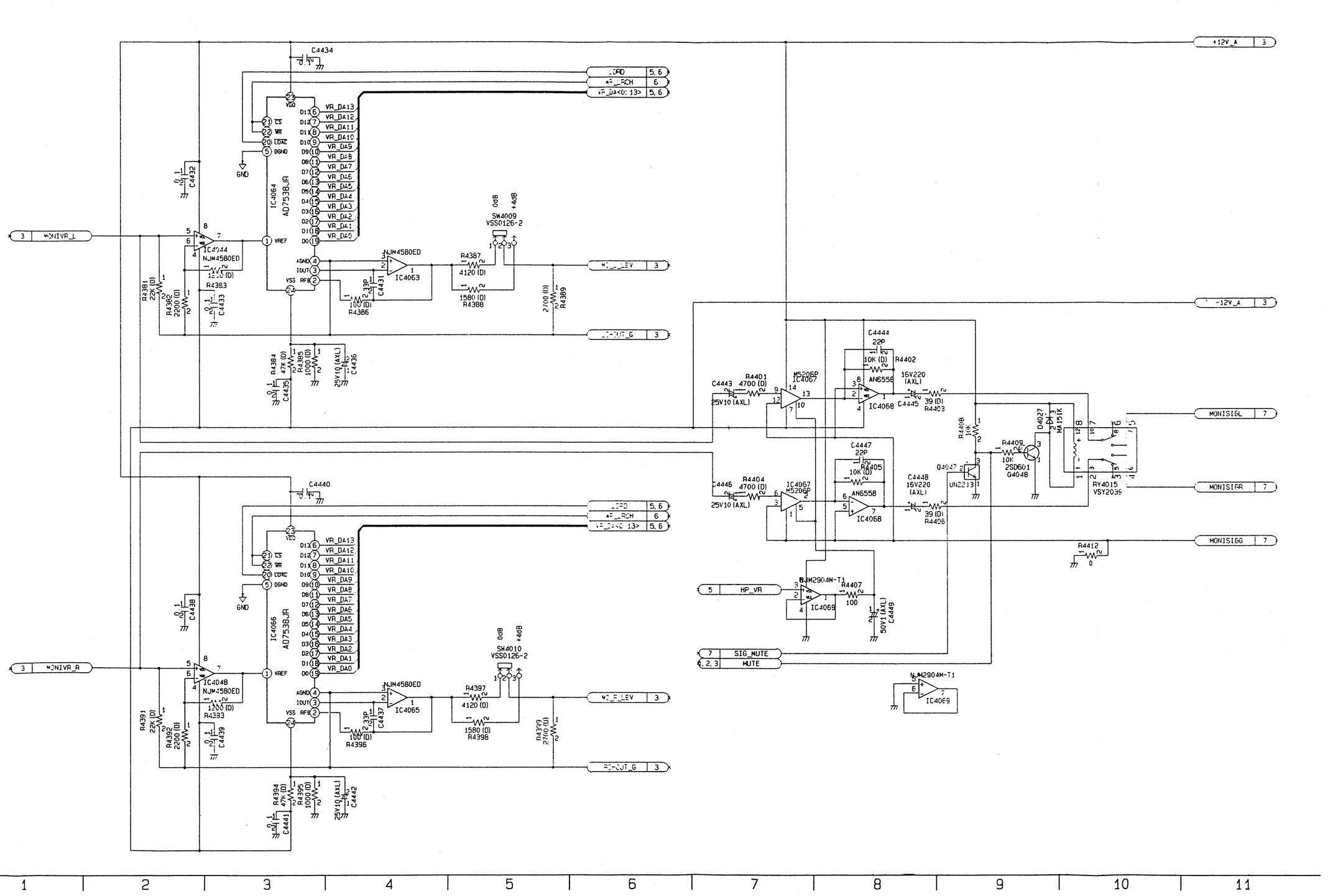

REVERSE SIDE

AUDIO D/A (S8 2/7, 3/7)

AUDIO D/A (S8 5/7) SCHEMATIC DIAGRAM

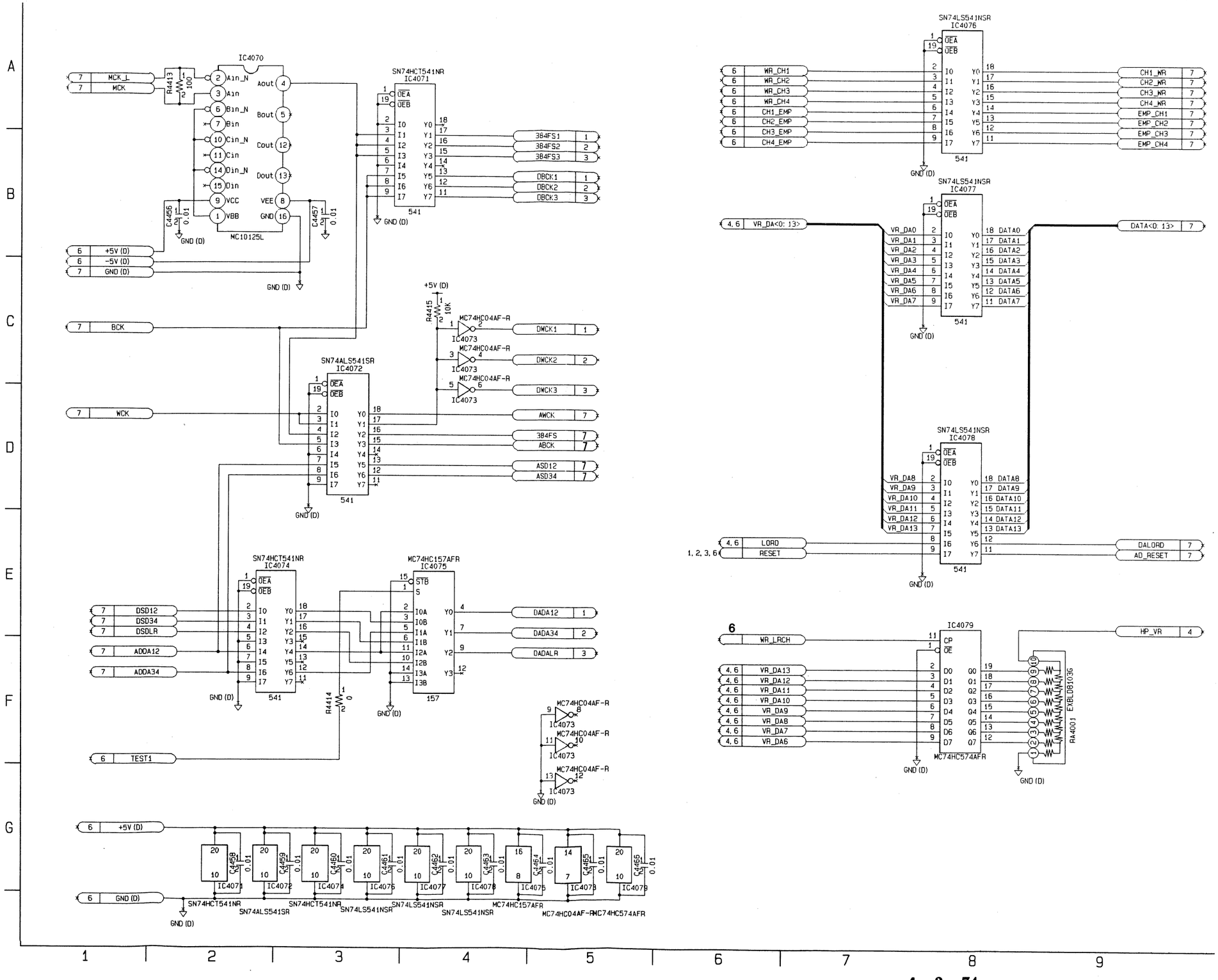

AUDIO D/A (S8 6/7) SCHEMATIC DIAGRAM

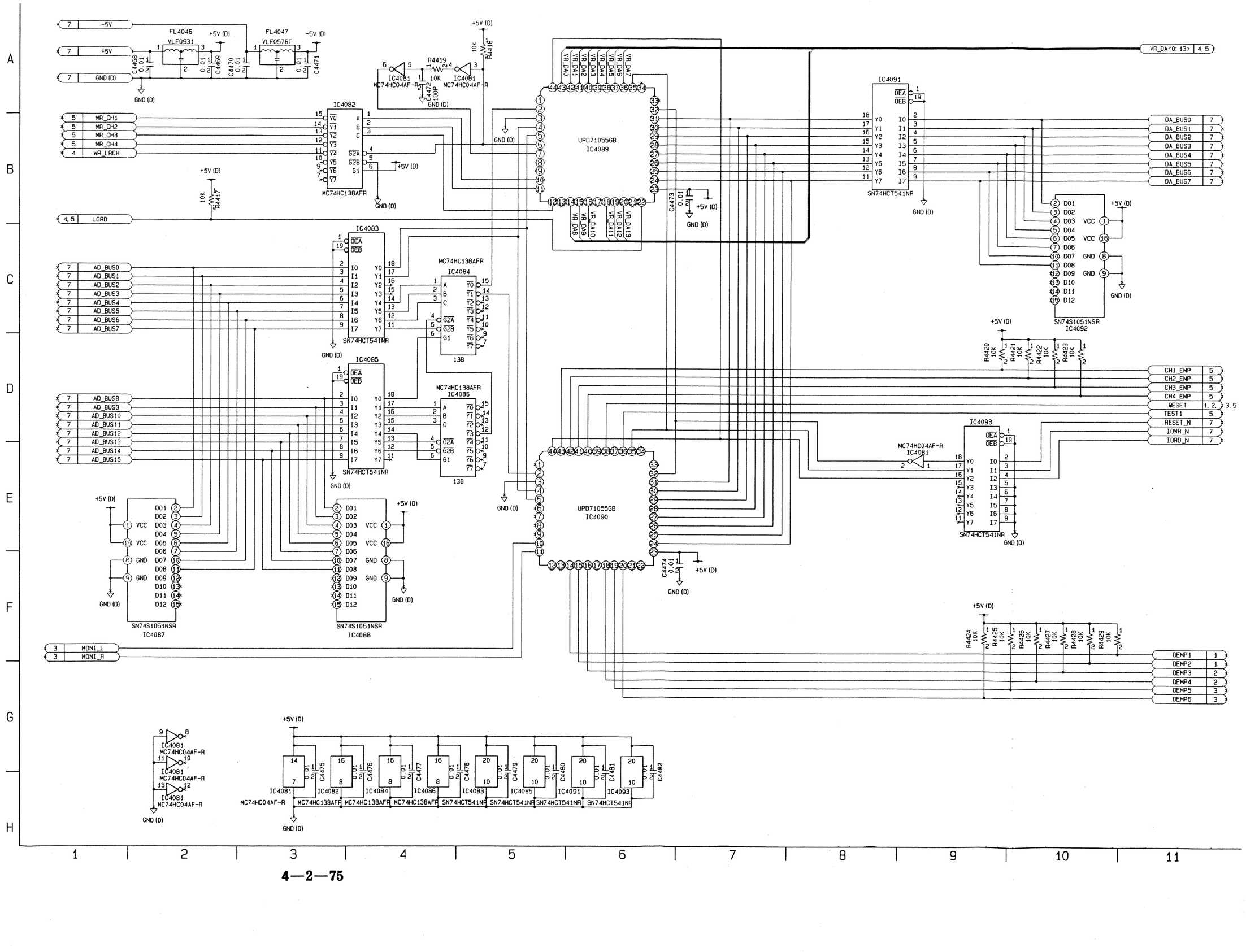

AUDIO D/A (S8 7/7) SCHEMATIC DIAGRAM

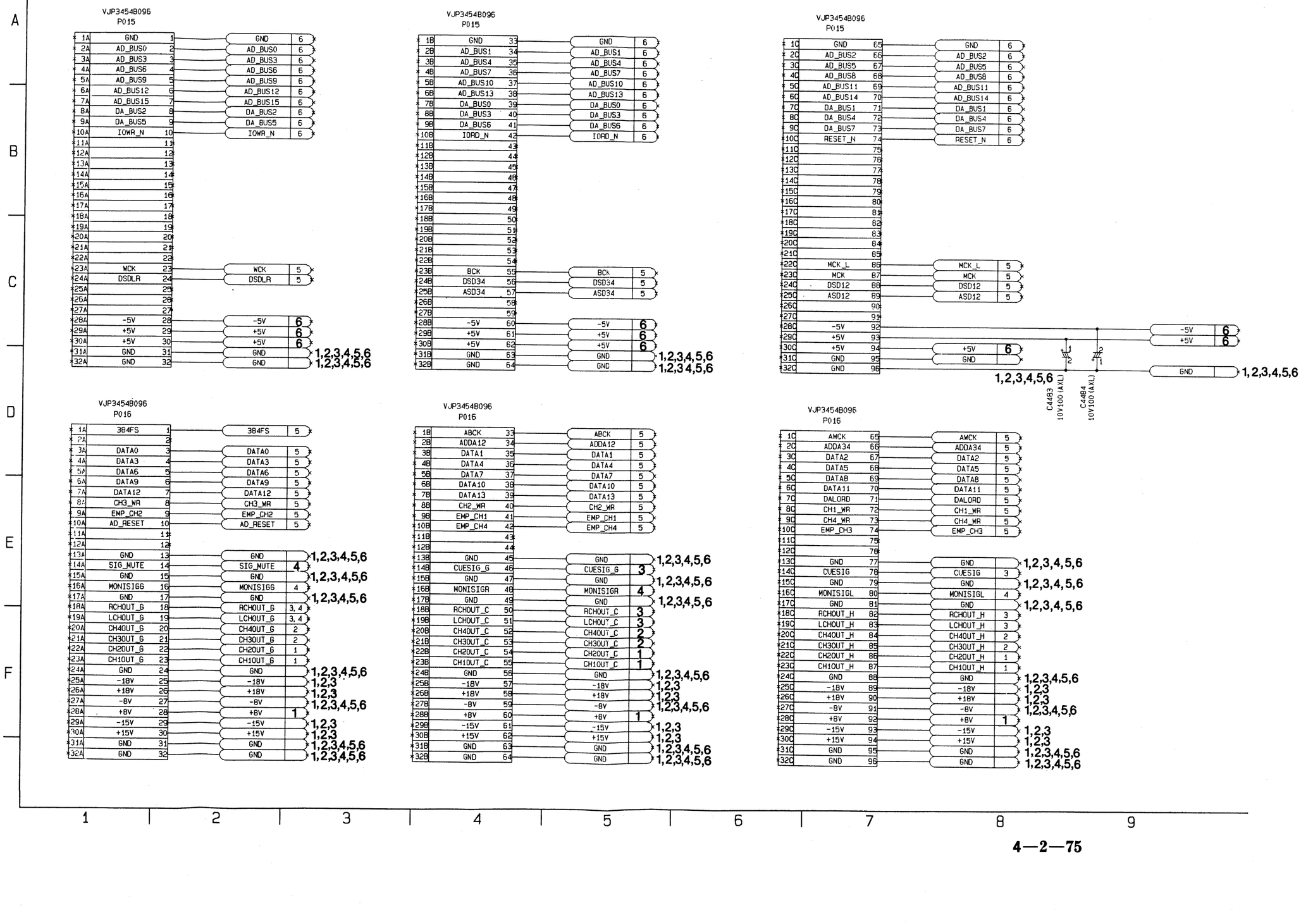

AUDIO A/D (S9 1/4) SCHEMATIC DIAGRAM

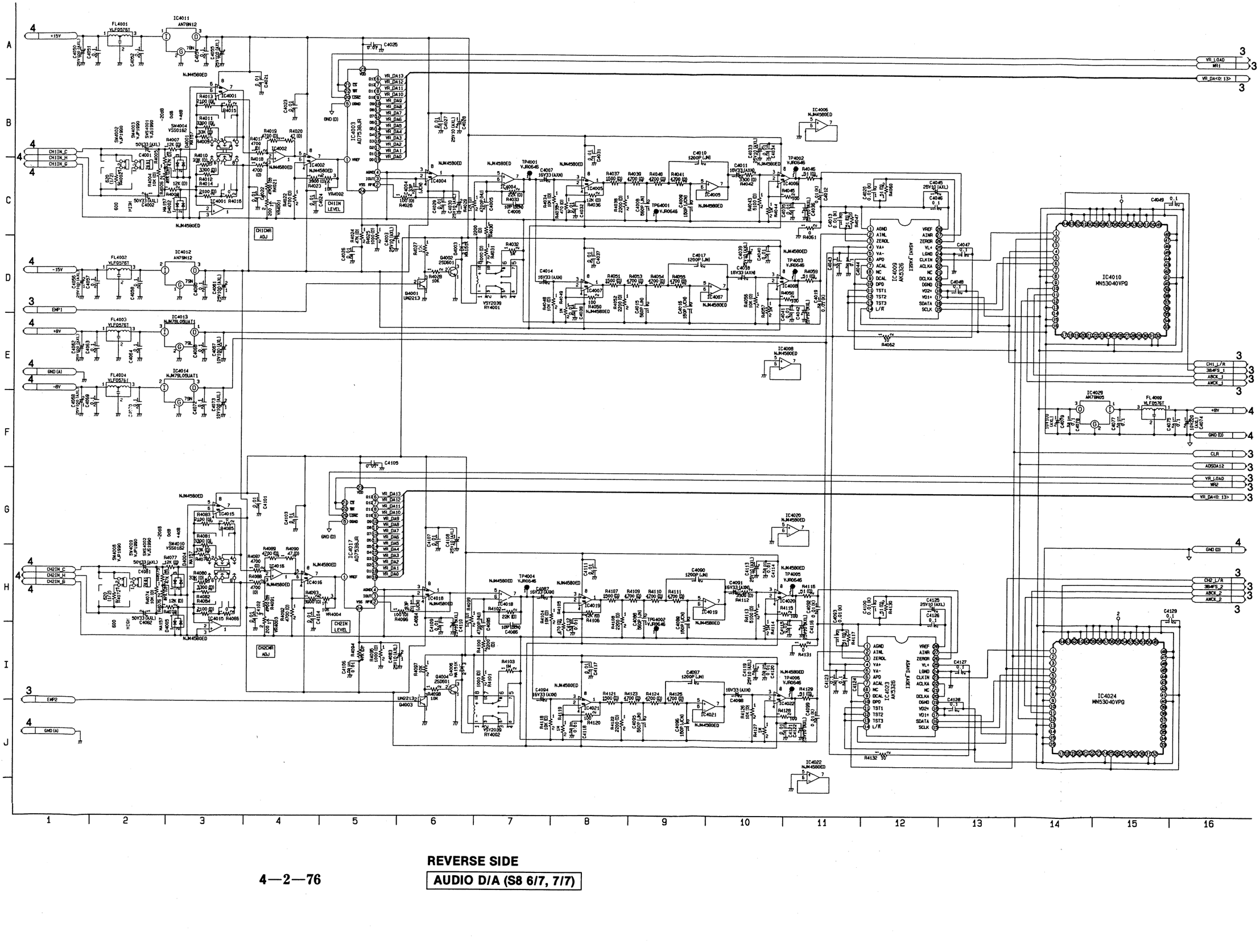

REVERSE SIDE

AUDIO D/A (S8 6/7, 7/7)

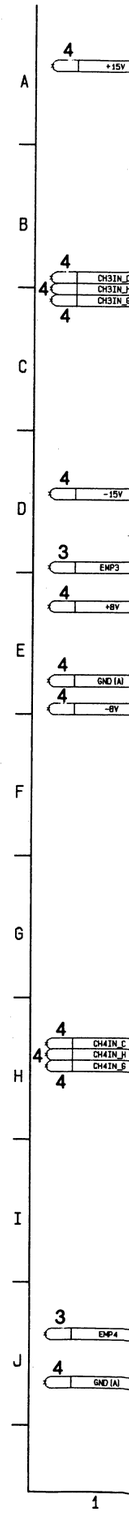

AUDIO A/D (S9 2/4) SCHEMATIC DIAGRAM

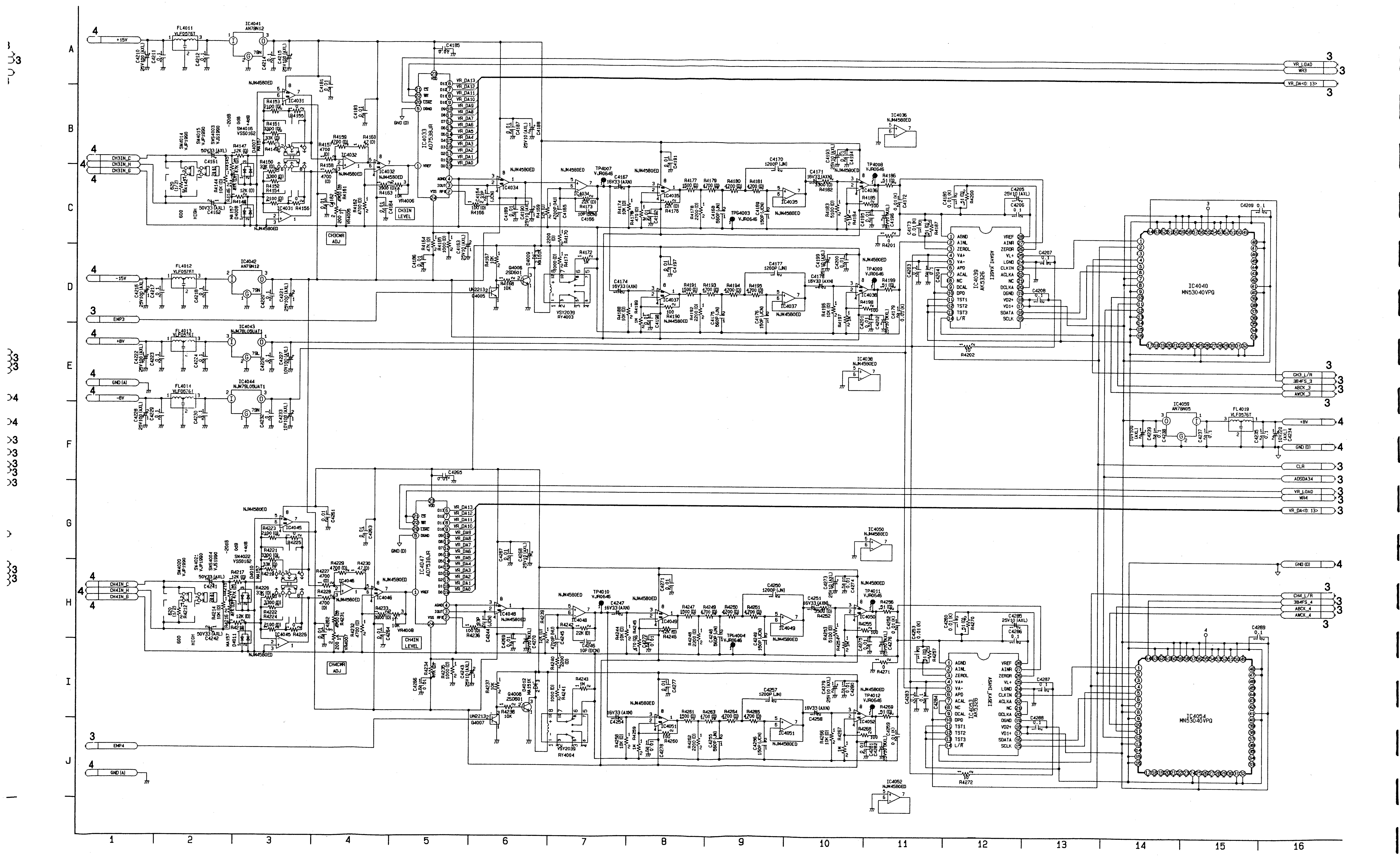

AUDIO A/D (S9 3/4) SCHEMATIC DIAGRAM

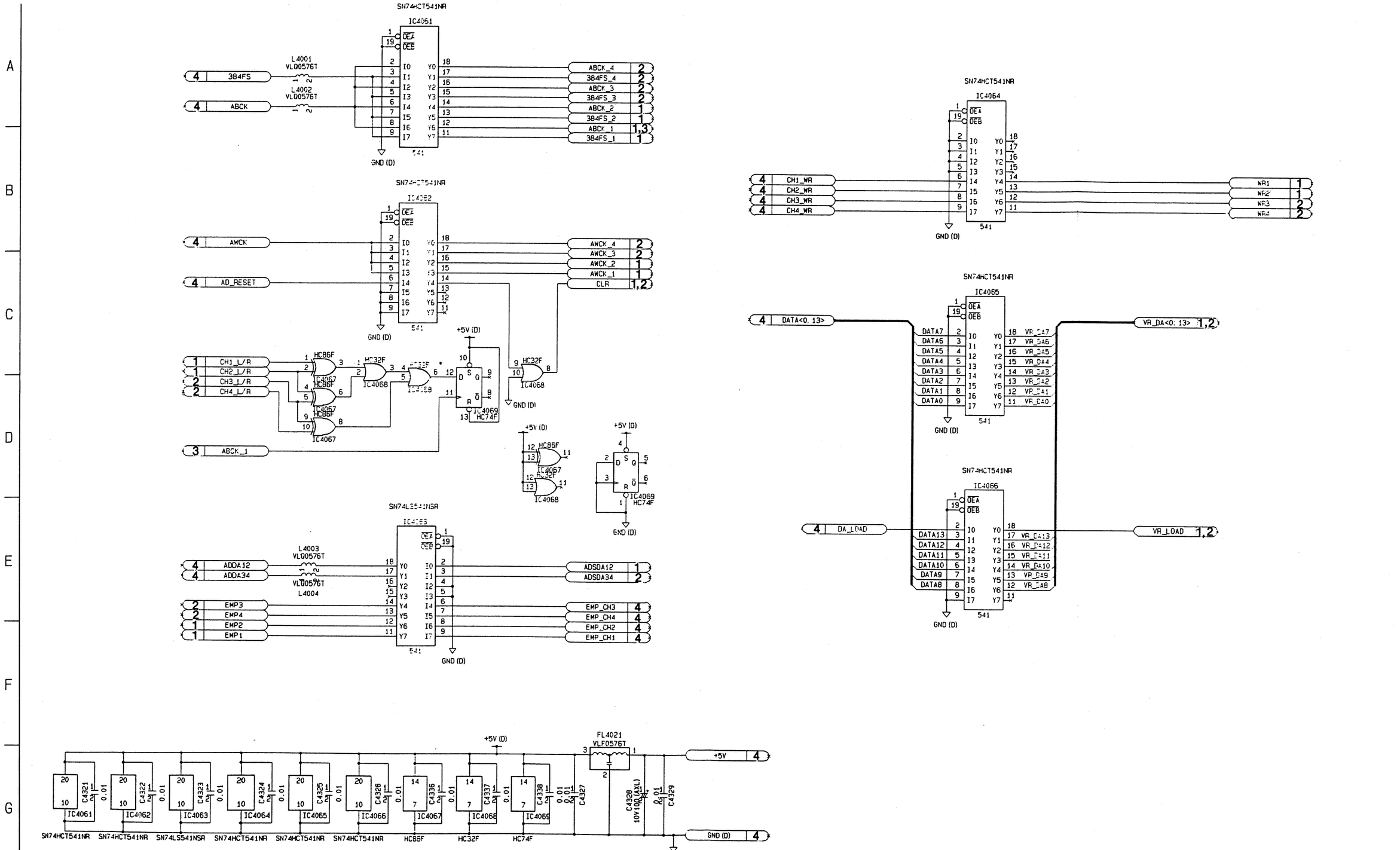

AUDIO A/D (S9 4/4) SCHEMATIC DIAGRAM

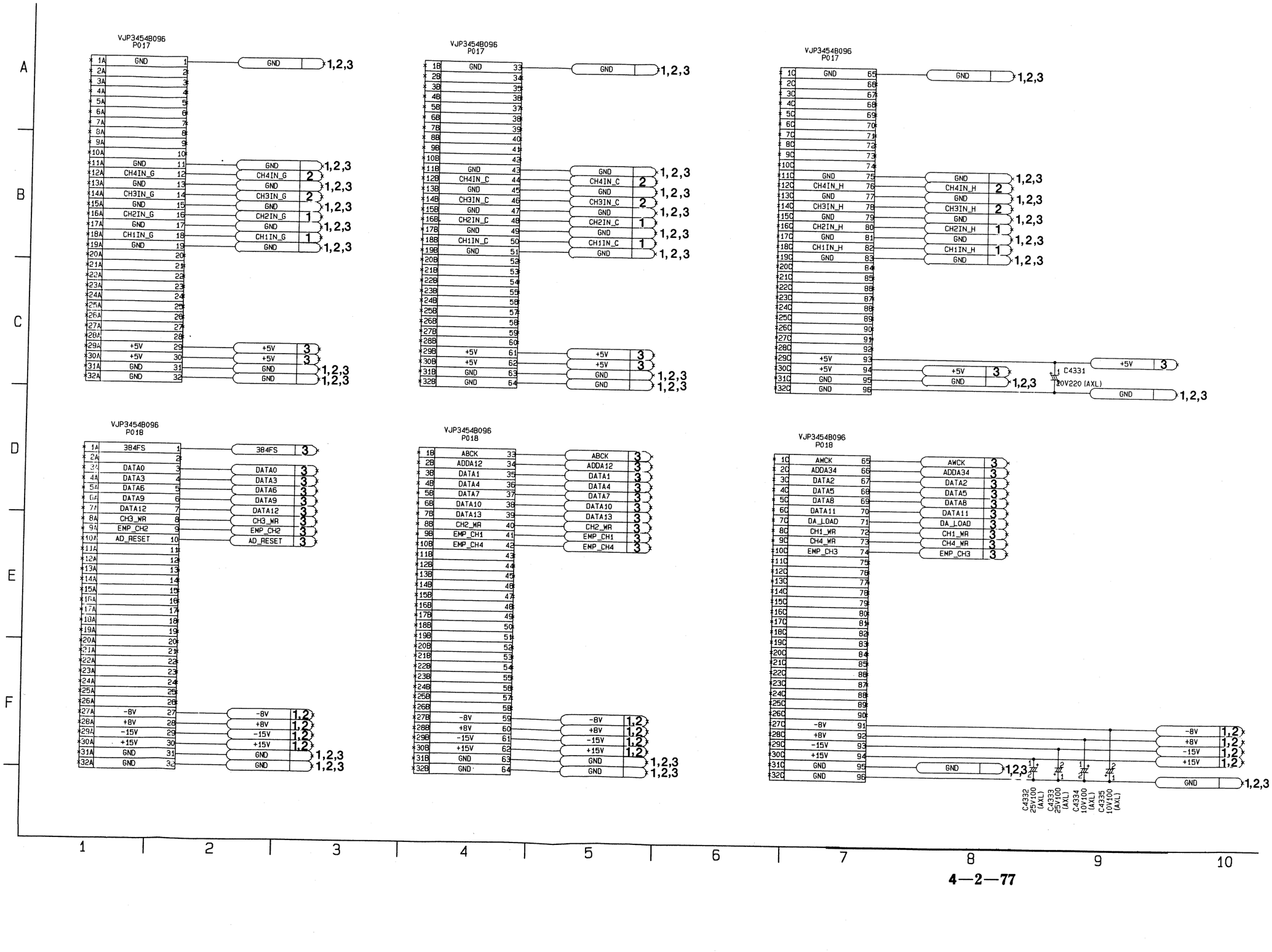

VIDEO A/D, D/A (S10 1/27) A/D OVERALL SCHEMATIC DIAGRAM

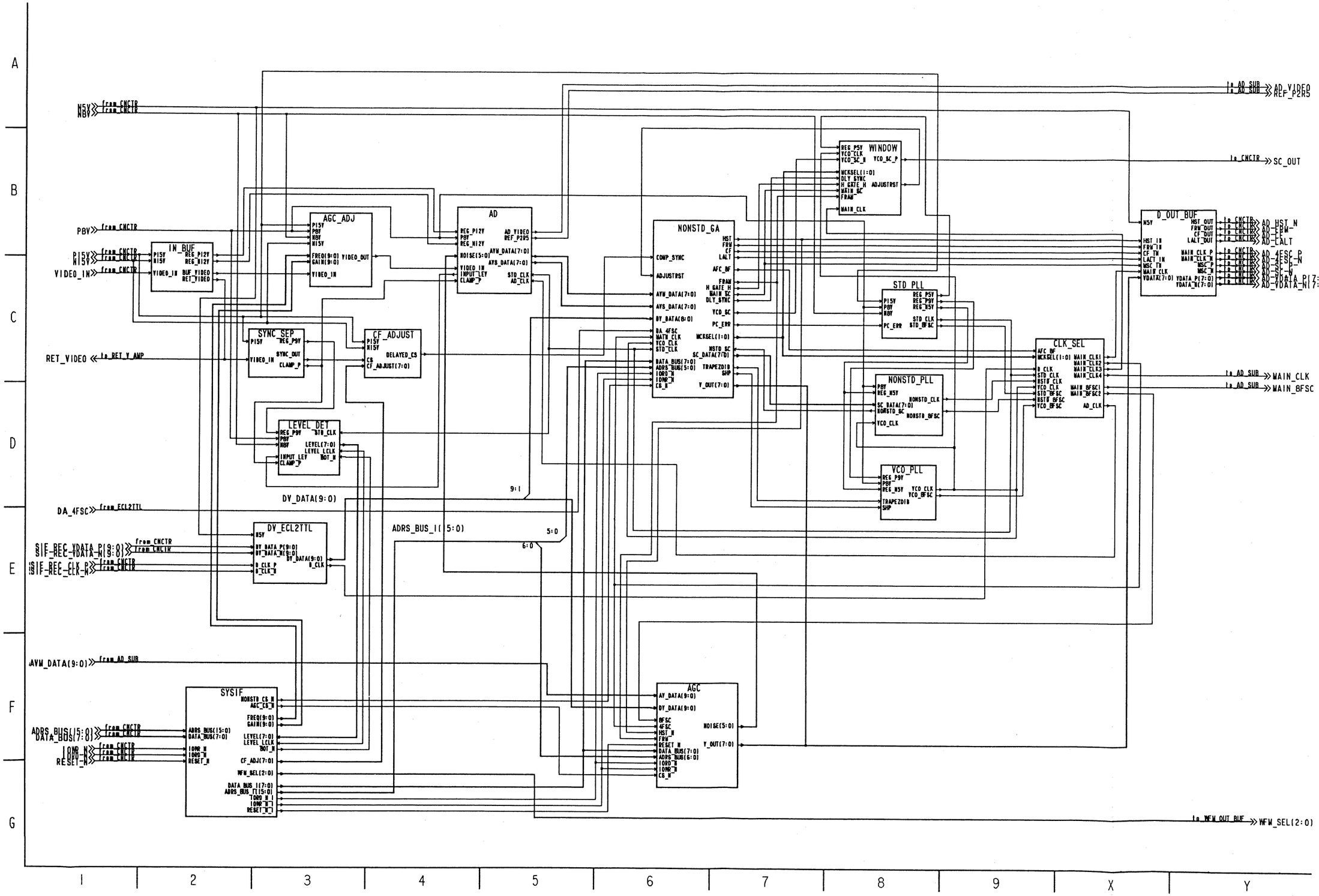

VIDEO A/D, D/A (S10 2/27) INPUT BUFFER SCHEMATIC DIAGRAM

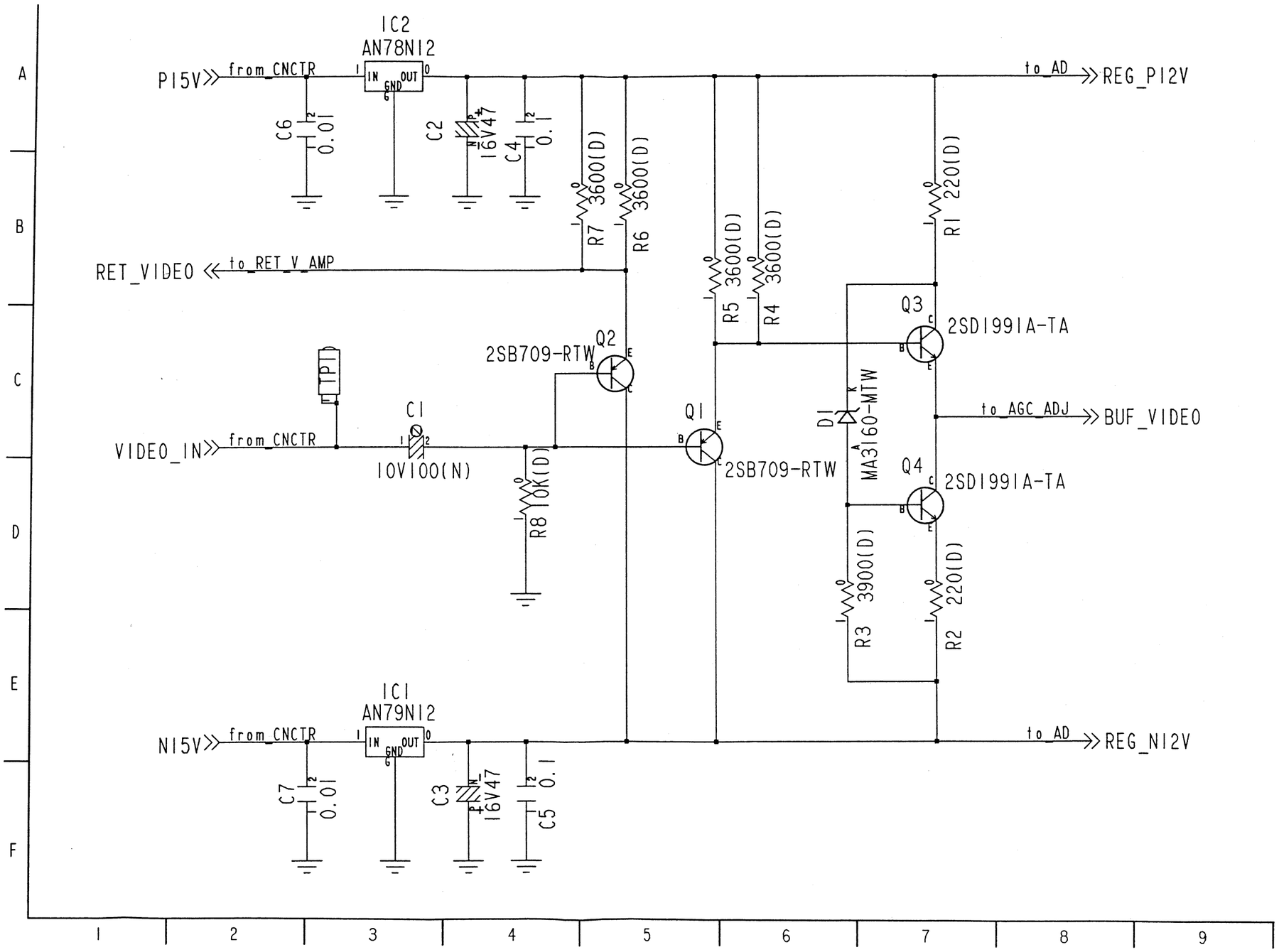

VIDEO A/D, D/A (S10 3/27) AGC ADJ SCHEMATIC DIAGRAM

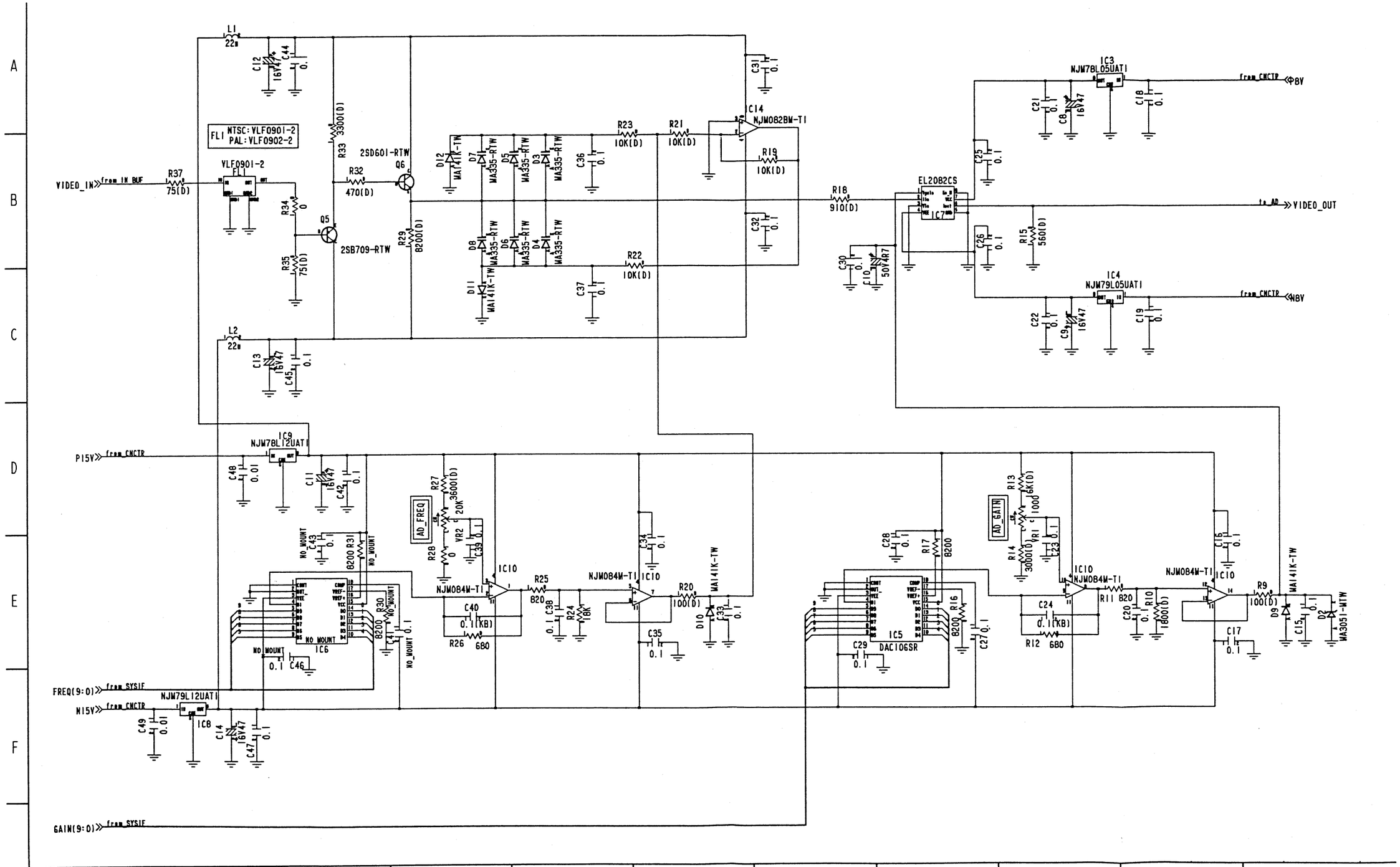

VIDEO A/D, D/A (S10 4/27) AD SCHEMATIC DIAGRAM

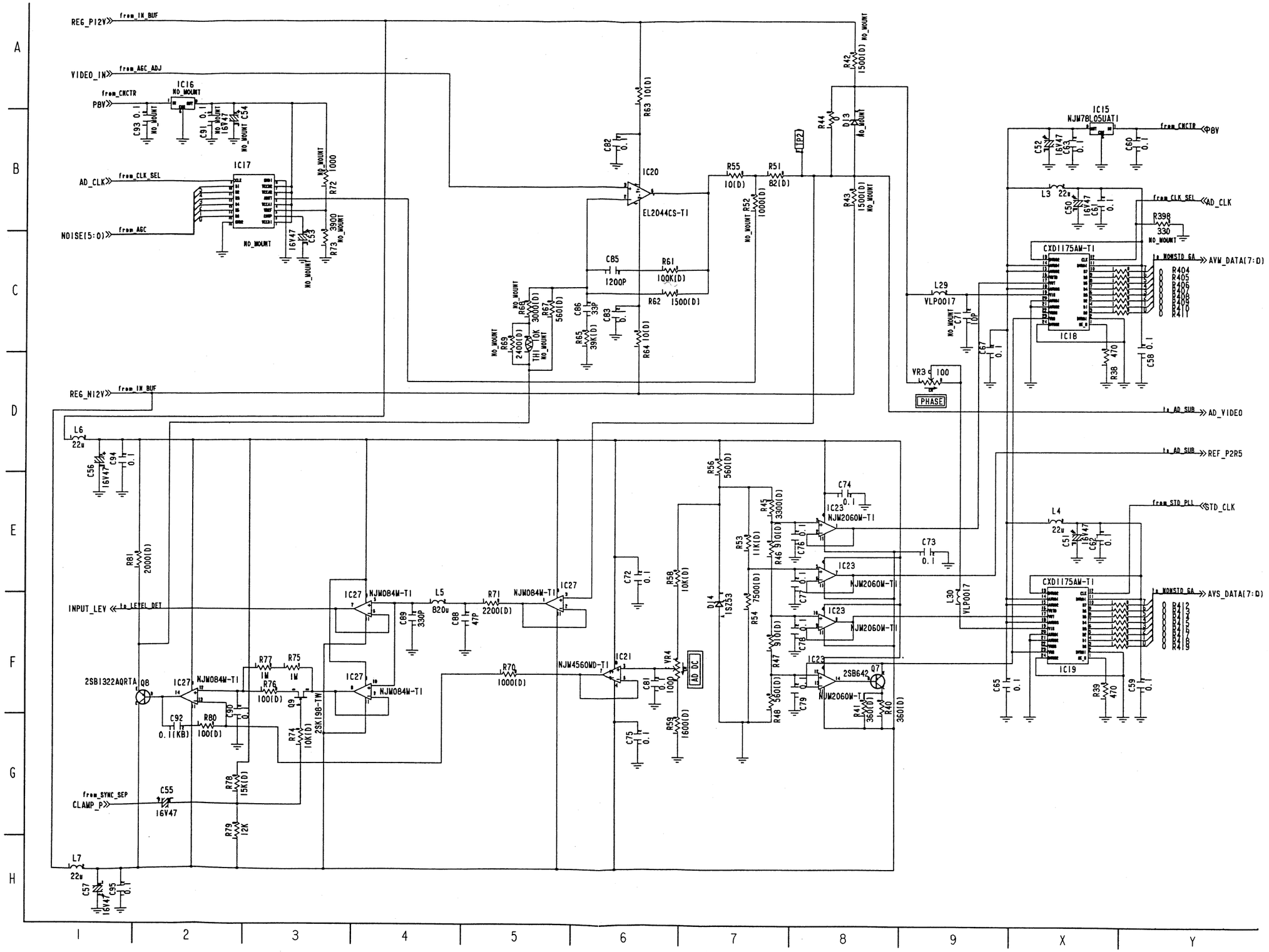

4—2—79

VIDEO A/D, D/A (S10 5/27) SYNC SEP SCHEMATIC DIAGRAM

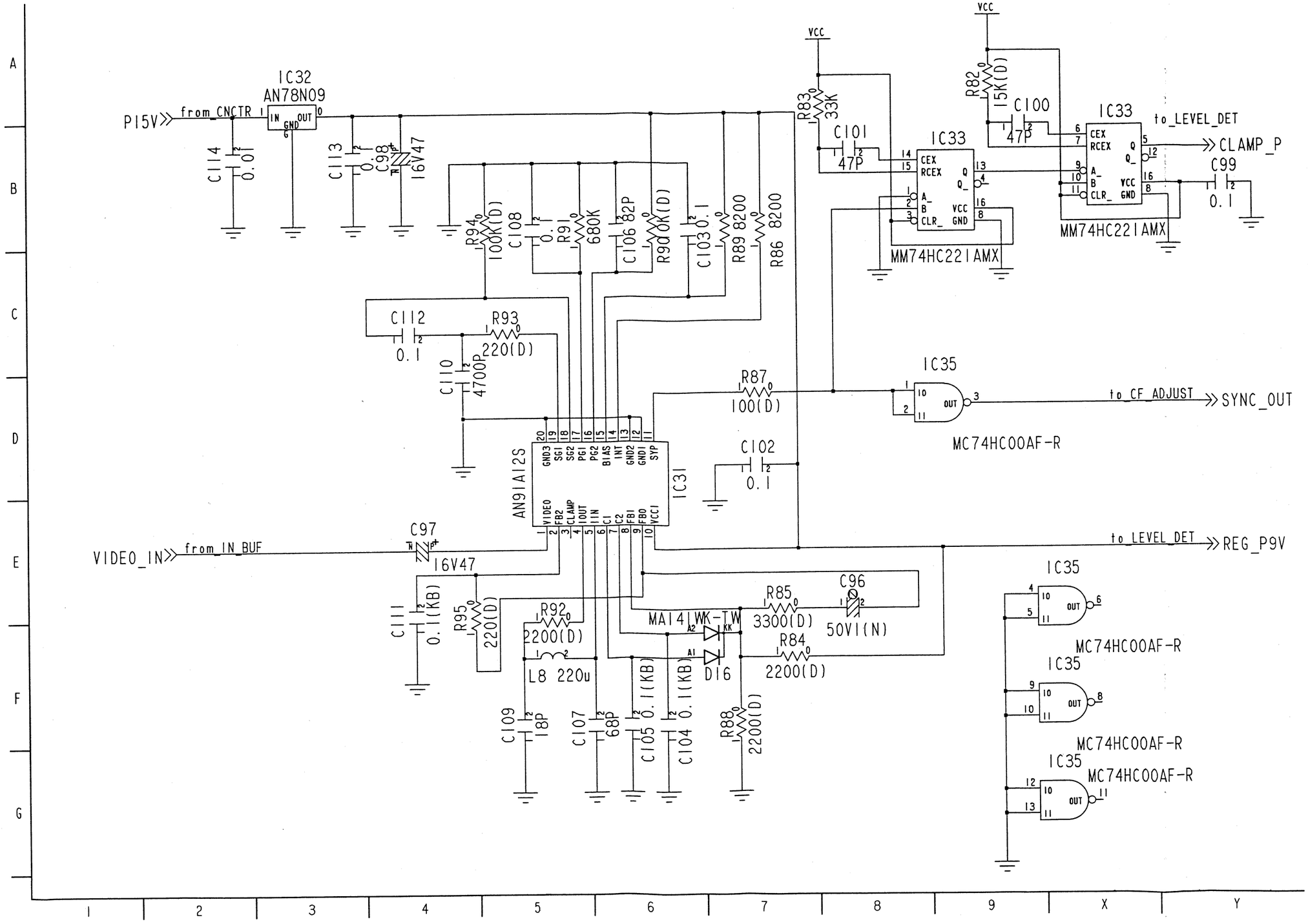

REVERSE SIDE

VIDEO A/D, D/A (S10 6/27) CF ADJUST SCHEMATIC DIAGRAM

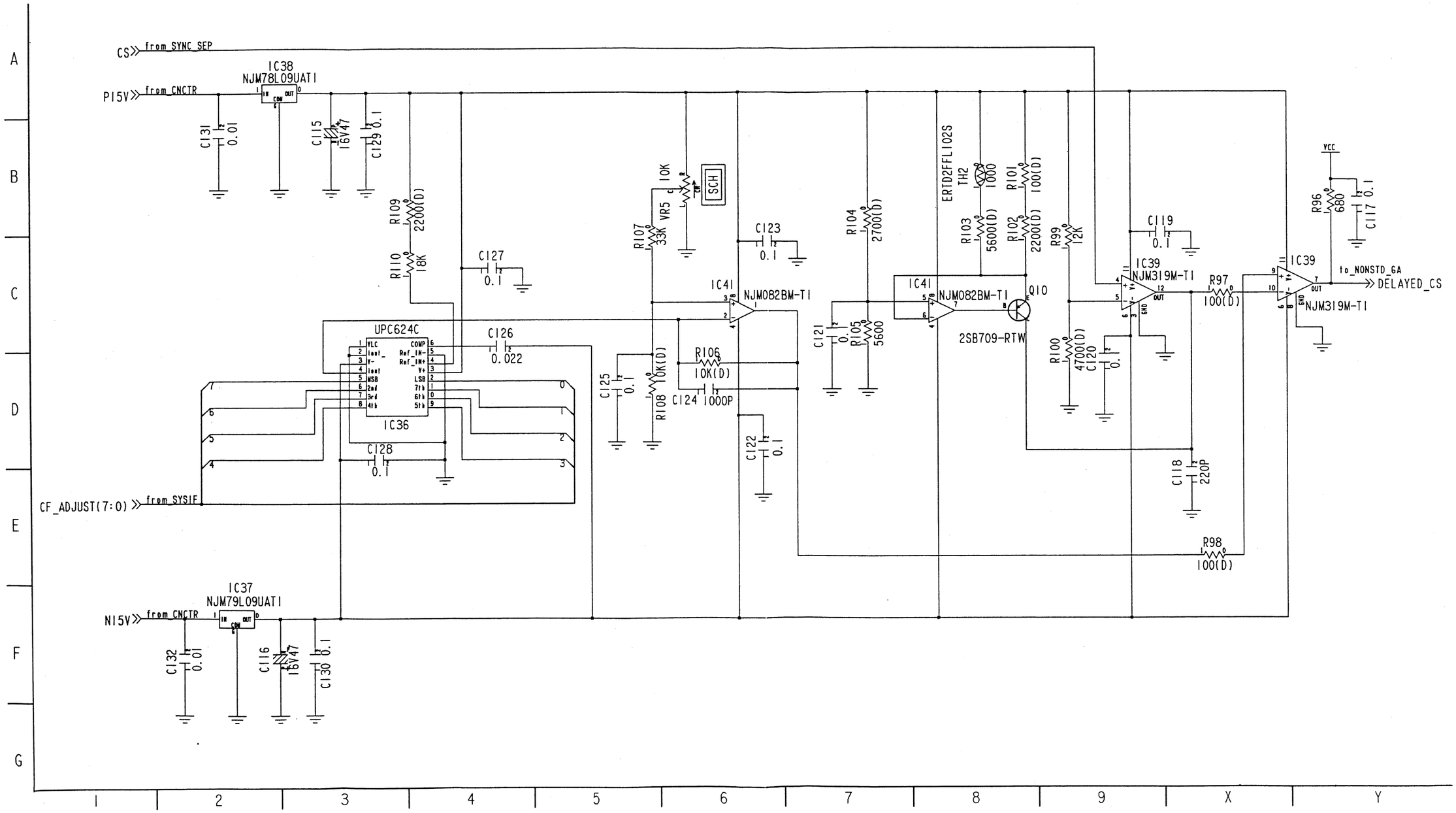

VIDEO A/D, D/A (S10 7/27) LEVEL DET SCHEMATIC DIAGRAM

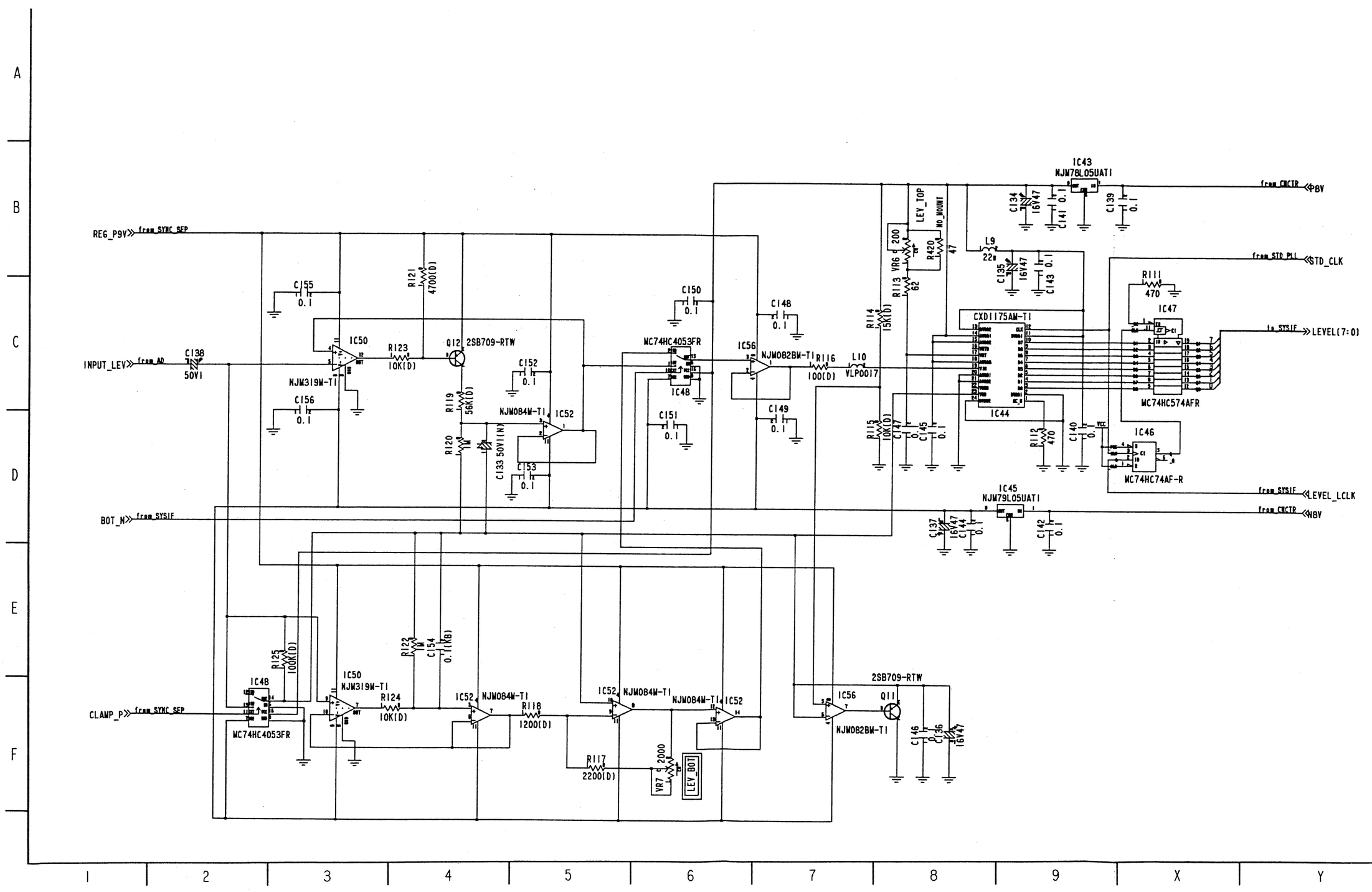

VIDEO A/D, D/A (S10 8/27) NON STD GA SCHEMATIC DIAGRAM

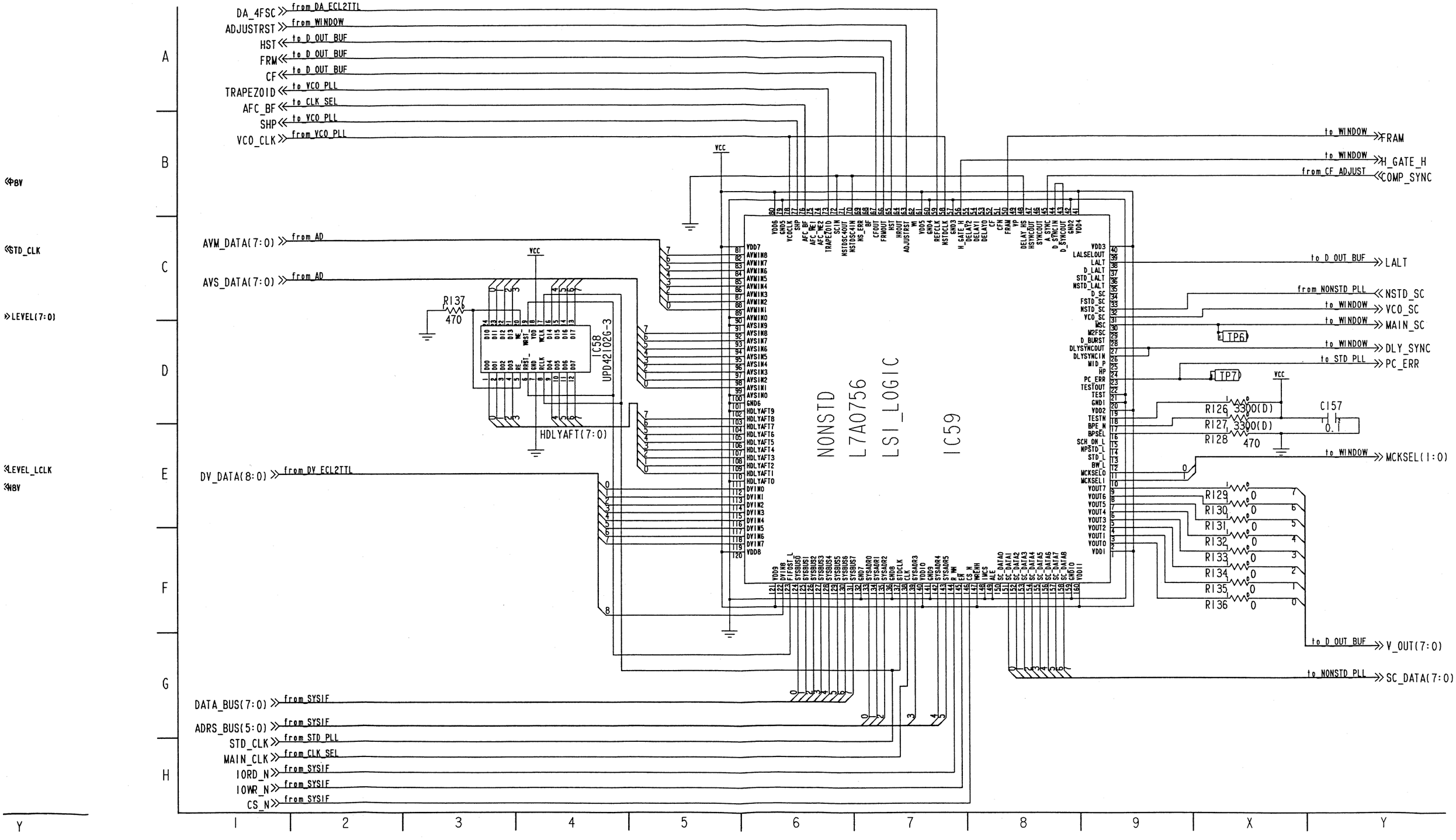

VIDEO A/D, D/A (S10 9/27) WINDOW SCHEMATIC DIAGRAM

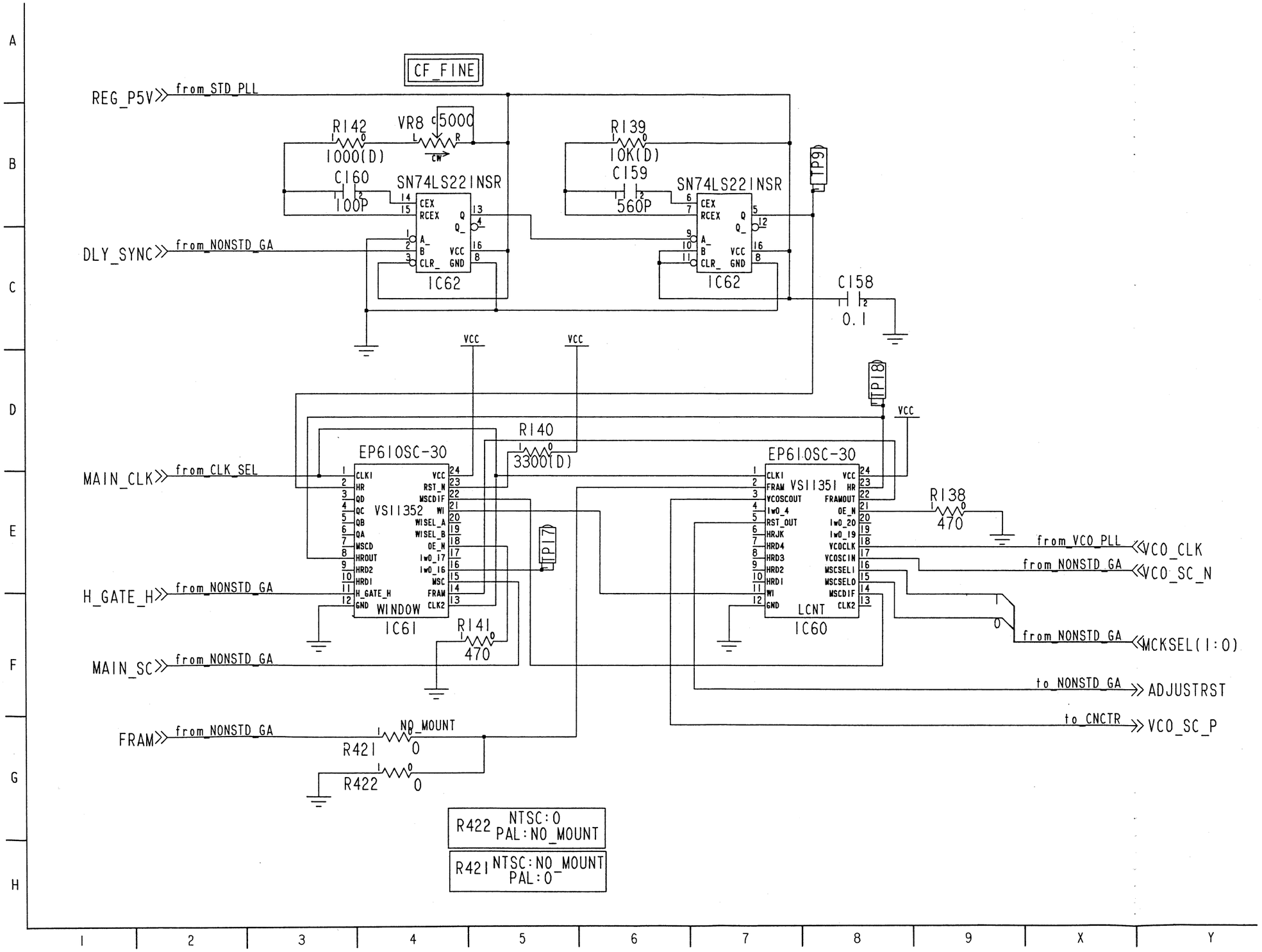

REVERSE SIDE

VIDEO A/D, D/A (S10 7/27, 8/27)

VIDEO A/D, D/A (S10 10/27) STD PLL SCHEMATIC DIAGRAM

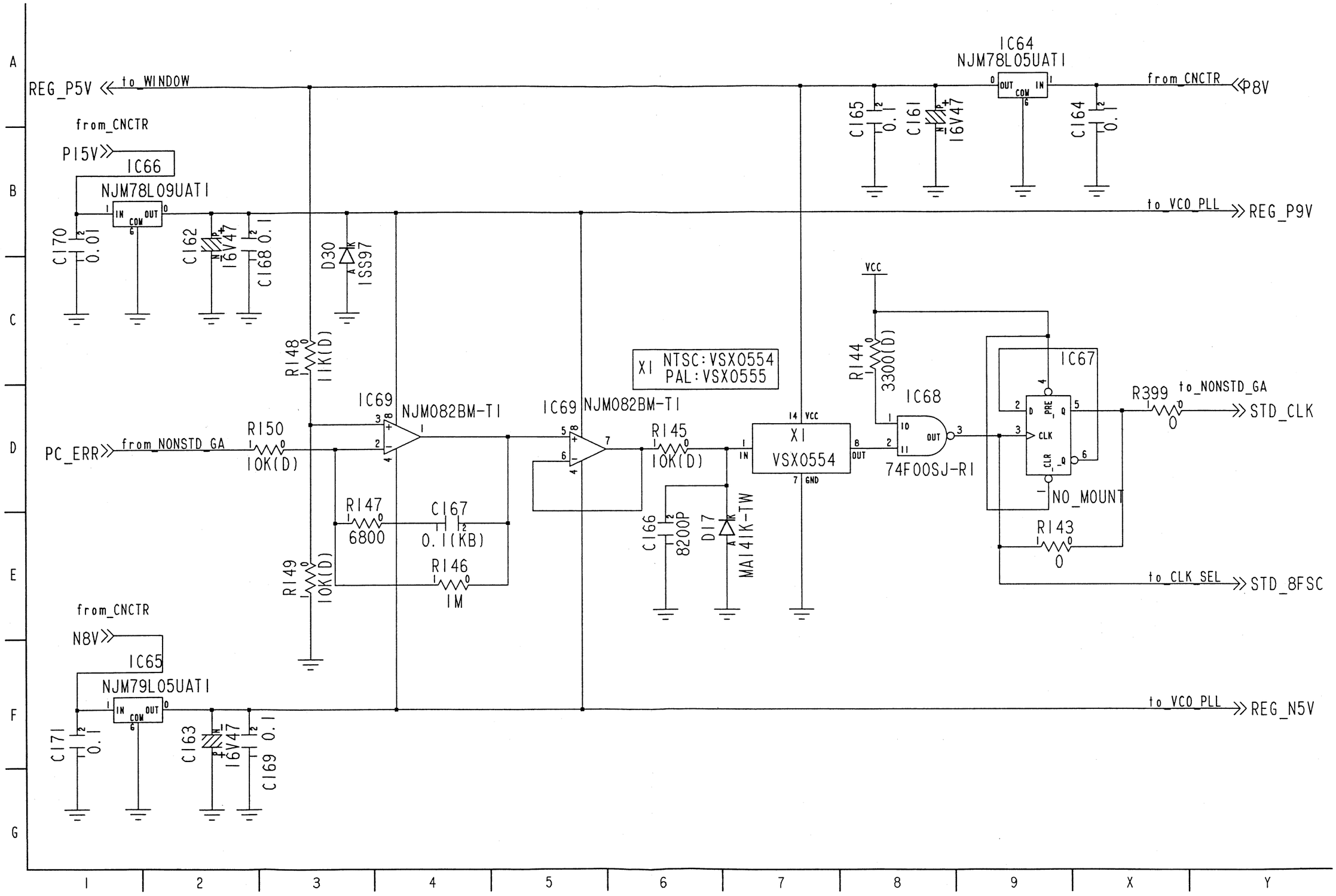

VIDEO A/D, D/A (S10 11/27) VCO PLL SCHEMATIC DIAGRAM

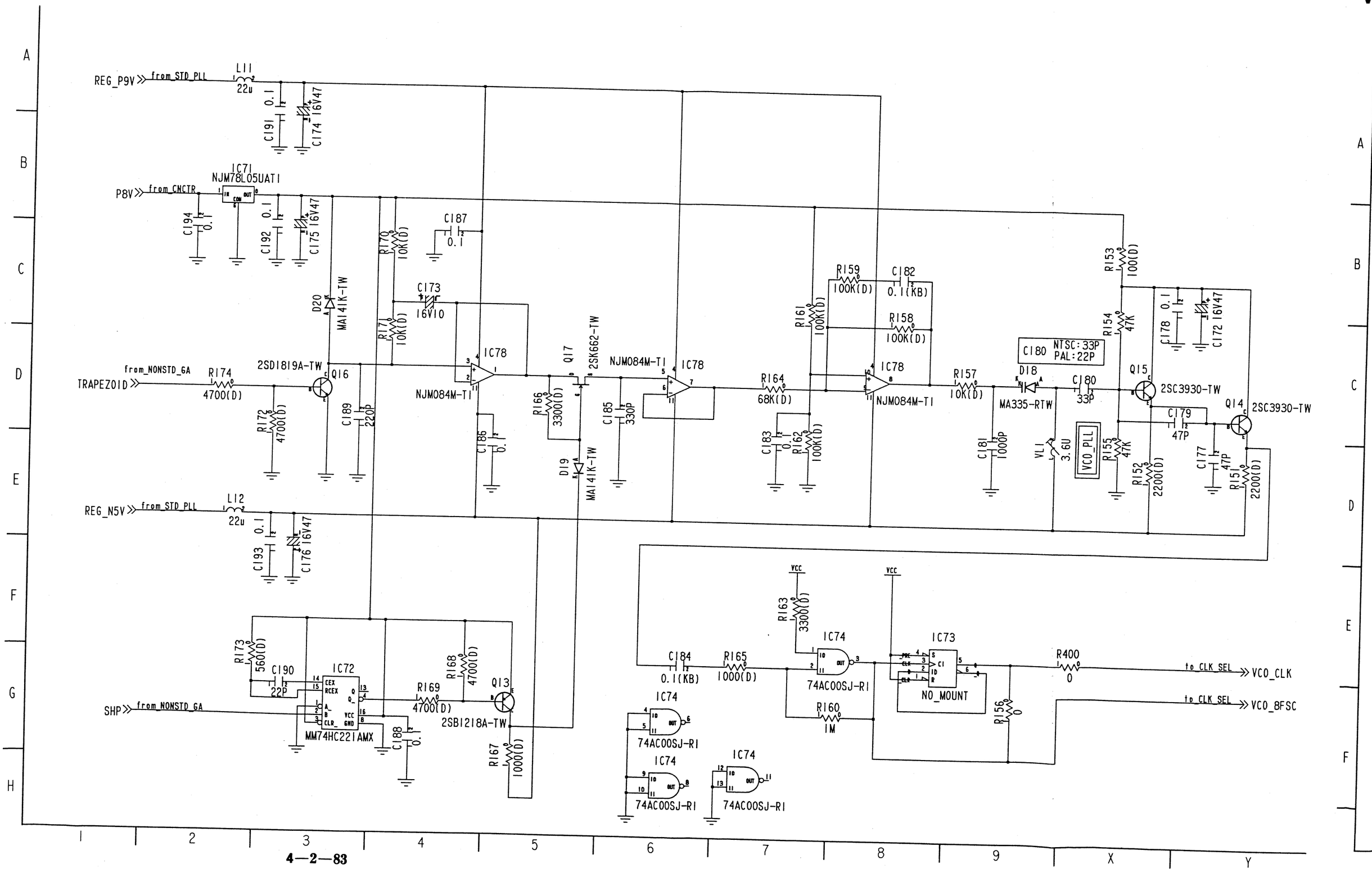

VIDEO A/D, D/A (S10 12/27) NON STD PLL SCHEMATIC DIAGRAM

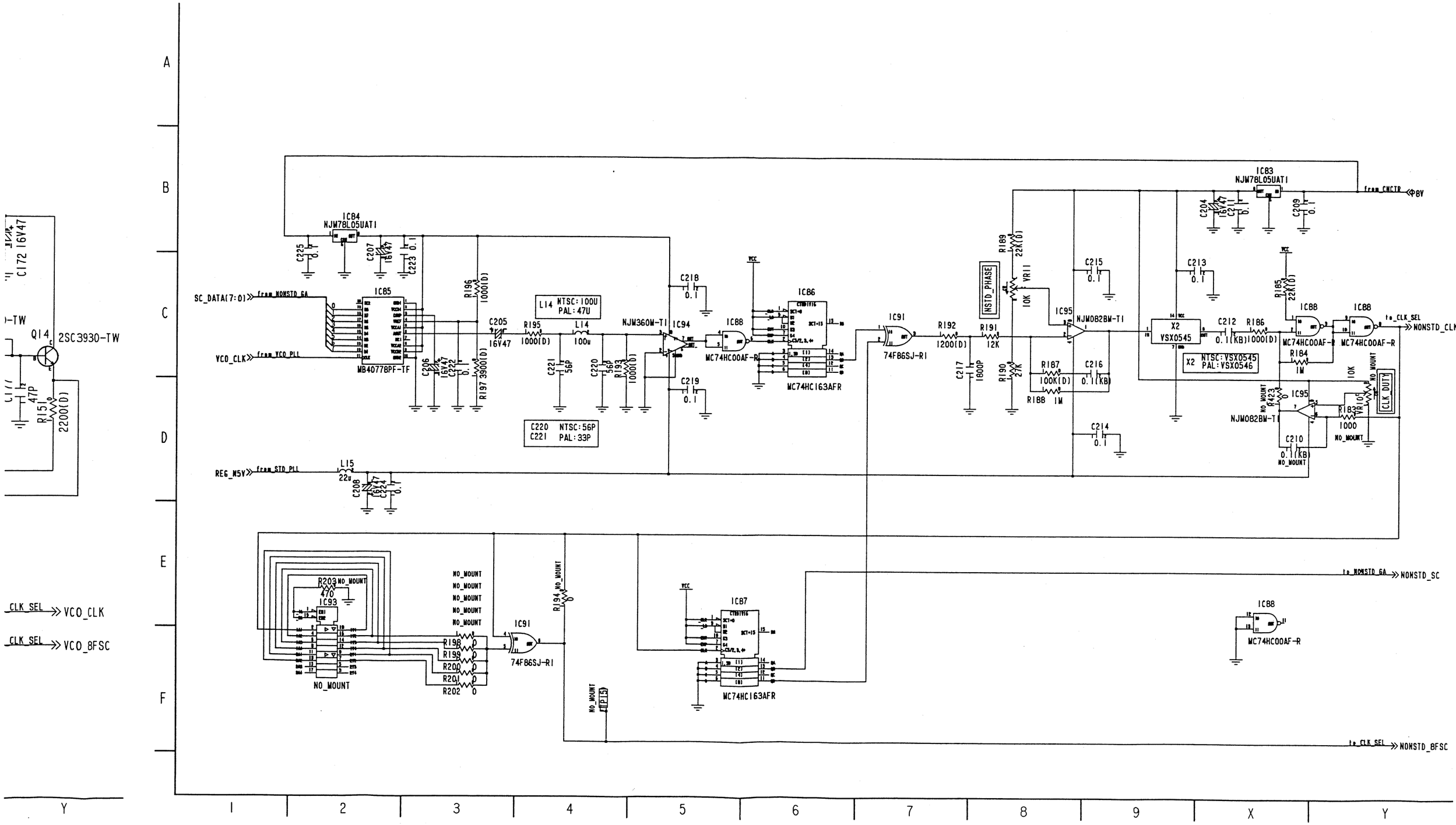

VIDEO A/D, D/A (S10 13/27) CLK SELECTOR SCHEMATIC DIAGRAM

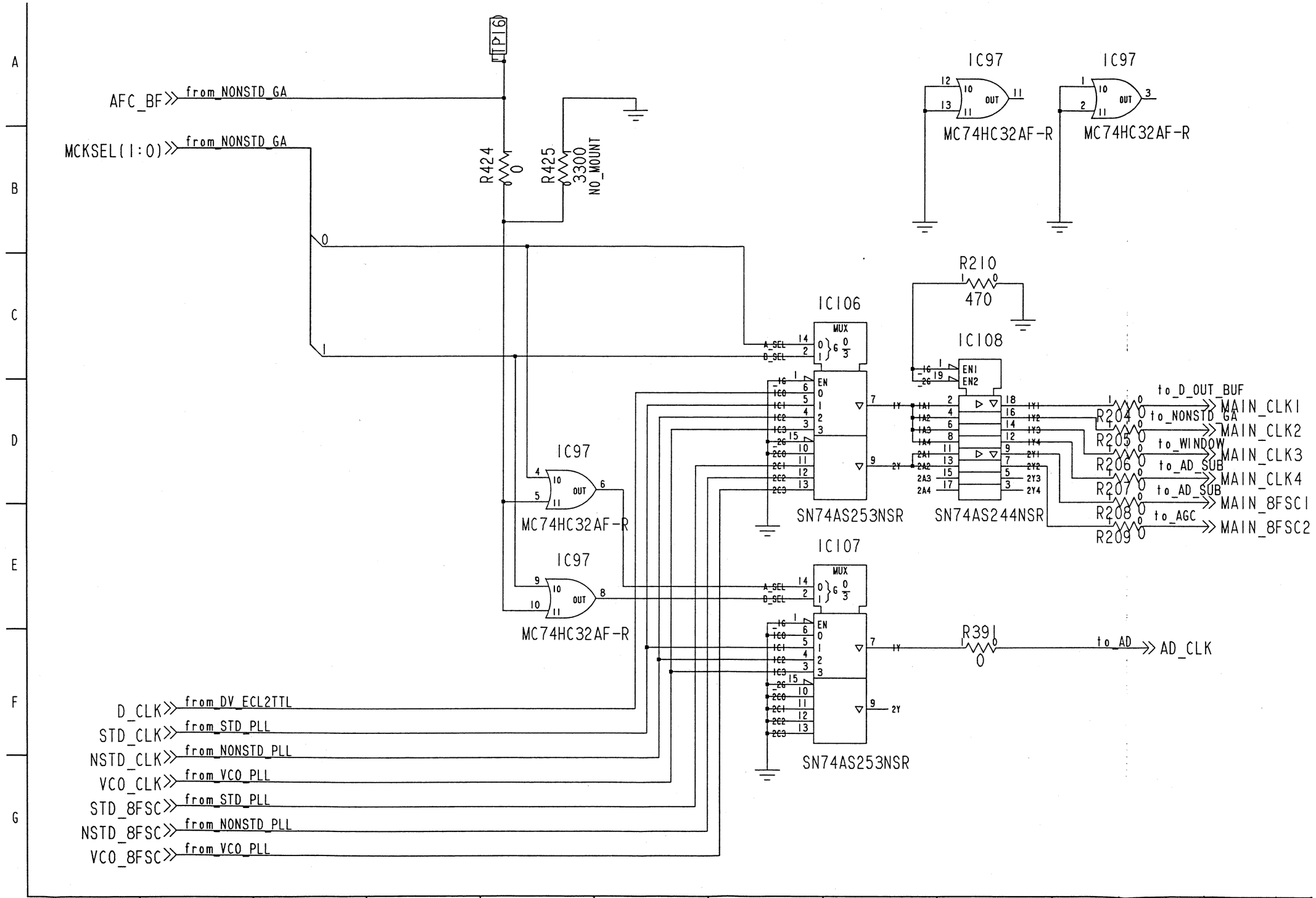

VIDEO A/D, D/A (S10 14/27) DV ECL 2 TTL SCHEMATIC DIAGRAM

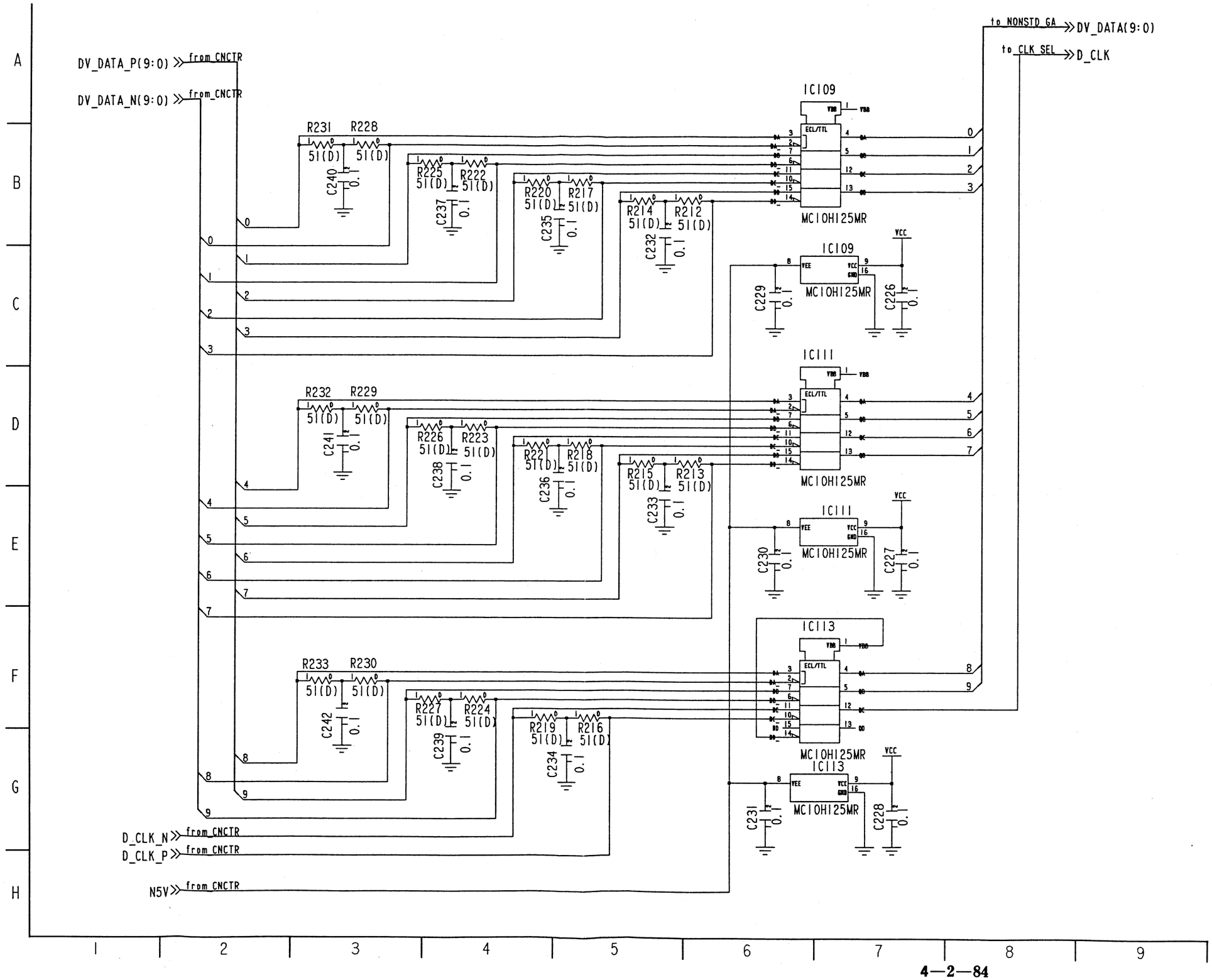

VIDEO A/D, D/A (S10 15/27) AGC SCHEMATIC DIAGRAM

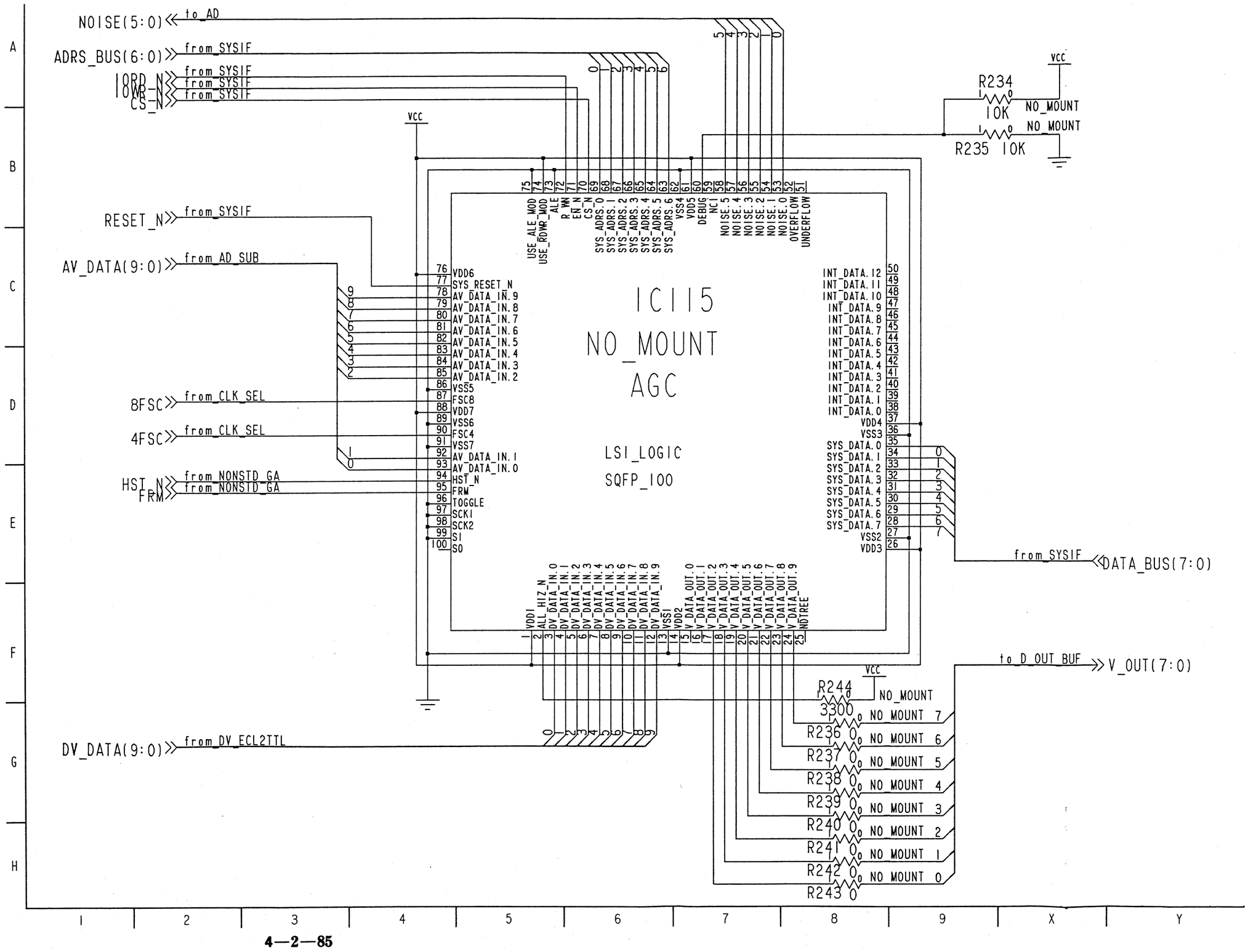

VIDEO A/D, D/A (S10 16/27) D OUT BUFFER SCHEMATIC DIAGRAM

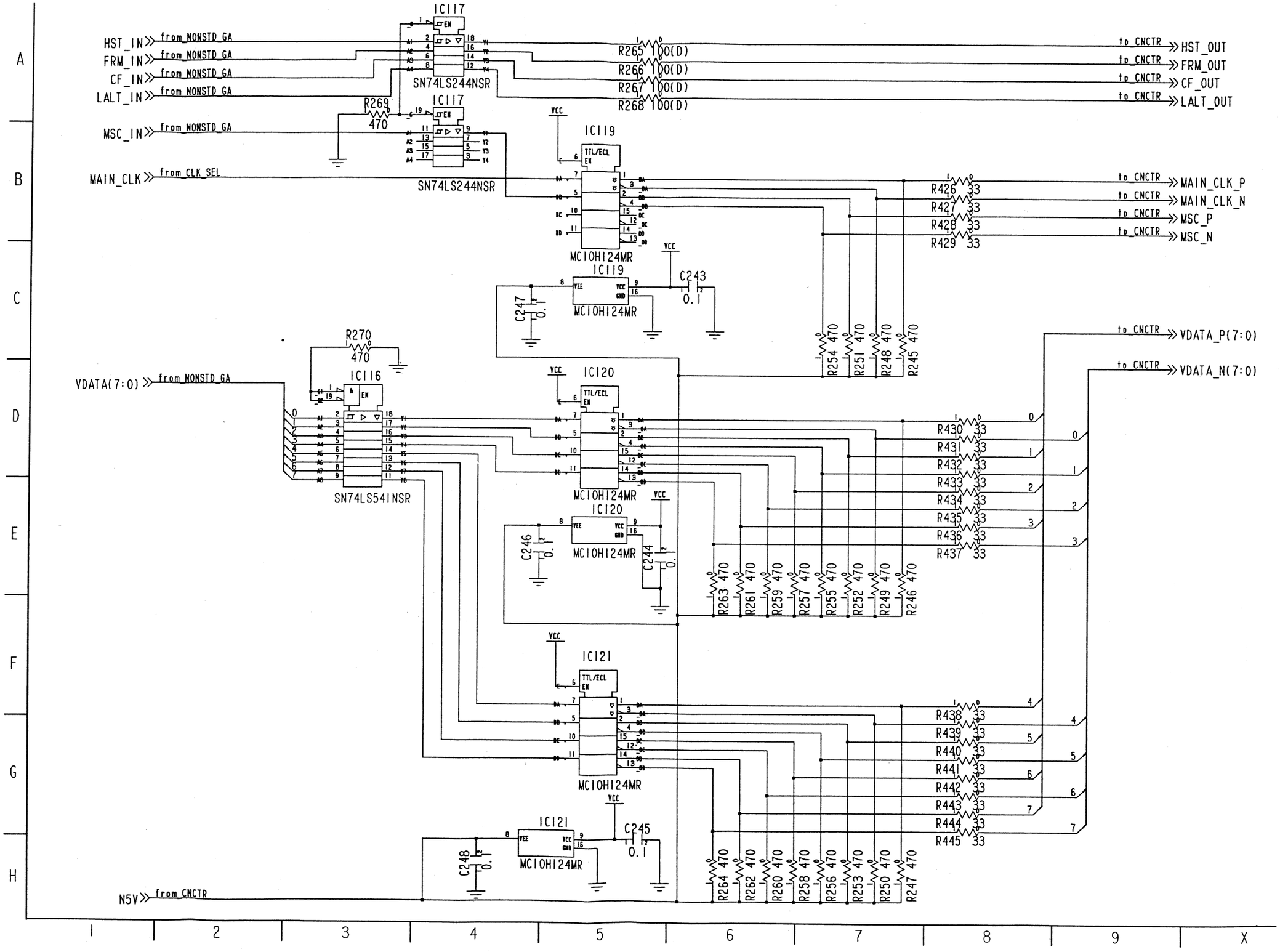

VIDEO A/D, D/A (S10 17/27) SYSTEM INTERFACE SCHEMATIC DIAGRAM

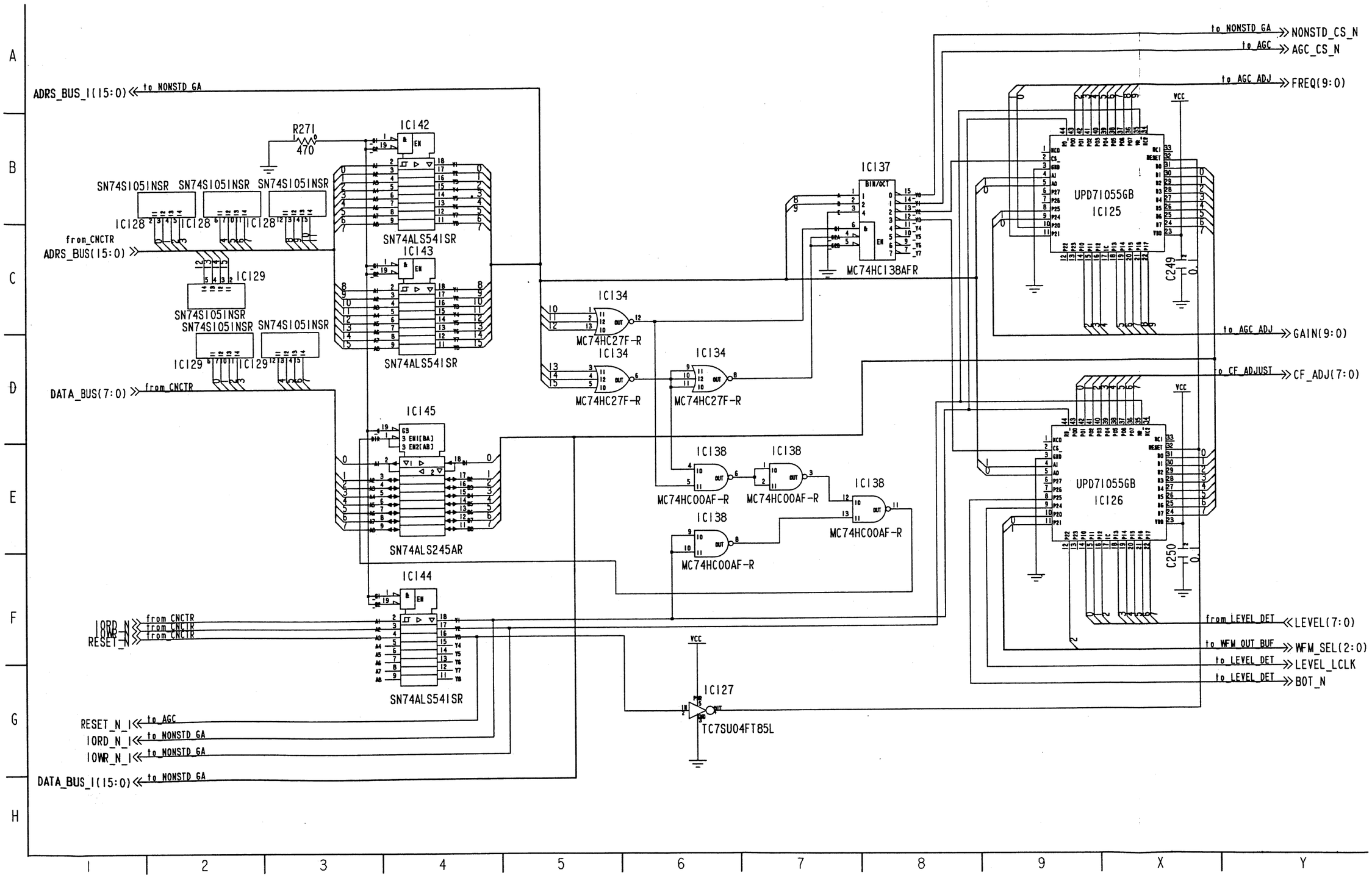

VIDEO A/D, D/A (S10 18/27) D/A OVERALL SCHEMATIC DIAGRAM

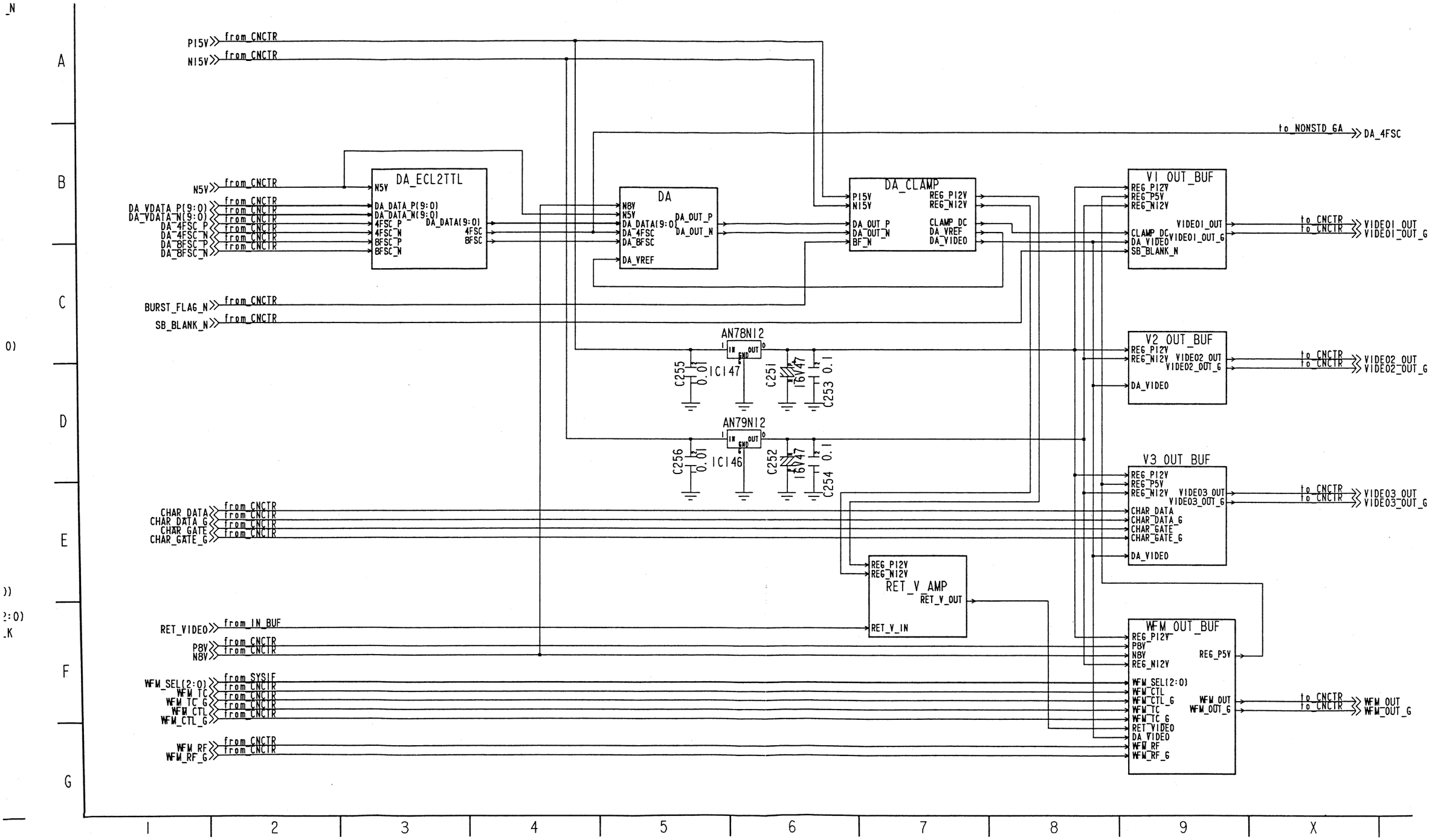

VIDEO A/D, D/A (S10 19/27) DA ECL 2 TTL SCHEMATIC DIAGRAM

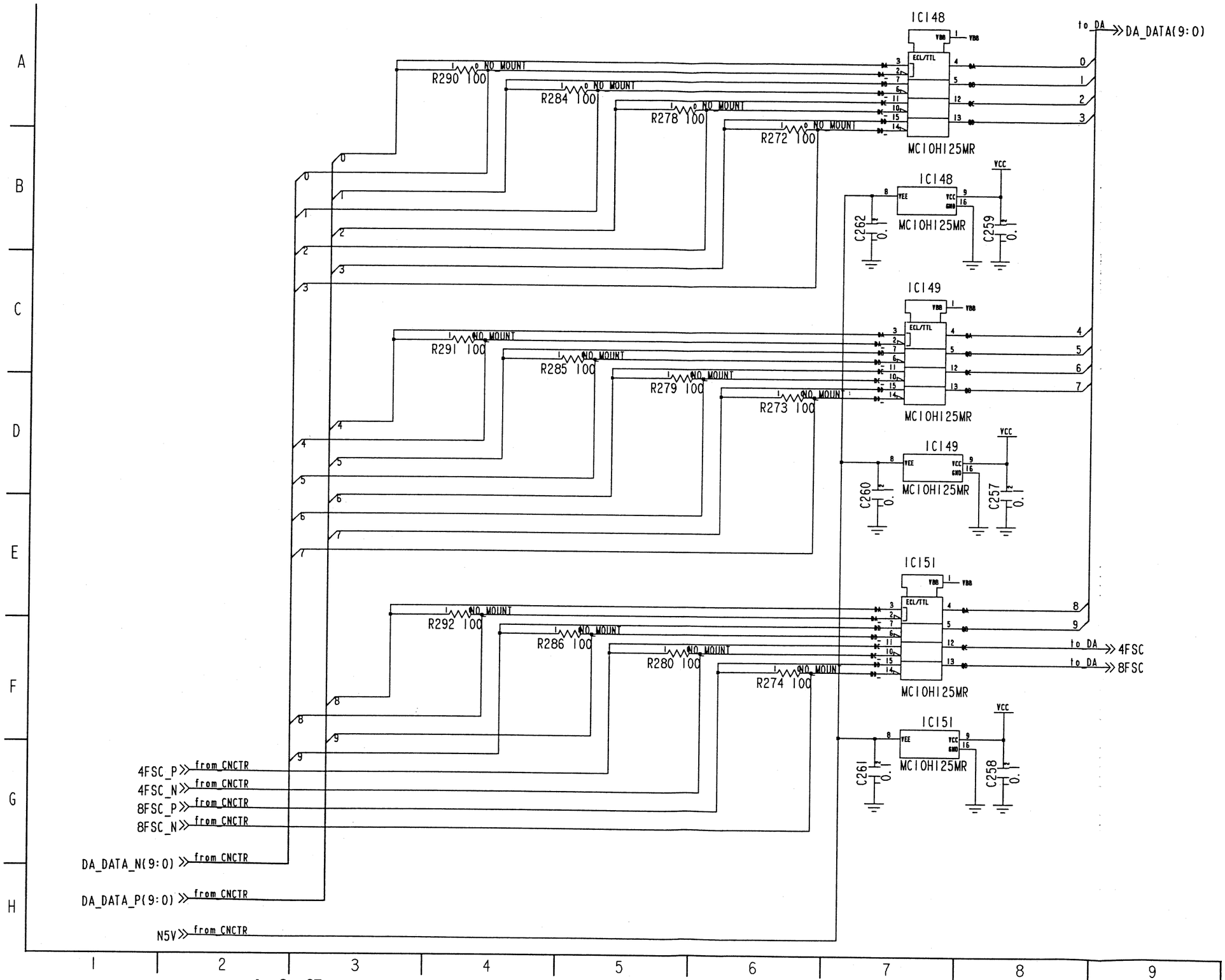

VIDEO A/D, D/A (S10 20/27) DA SCHEMATIC DIAGRAM

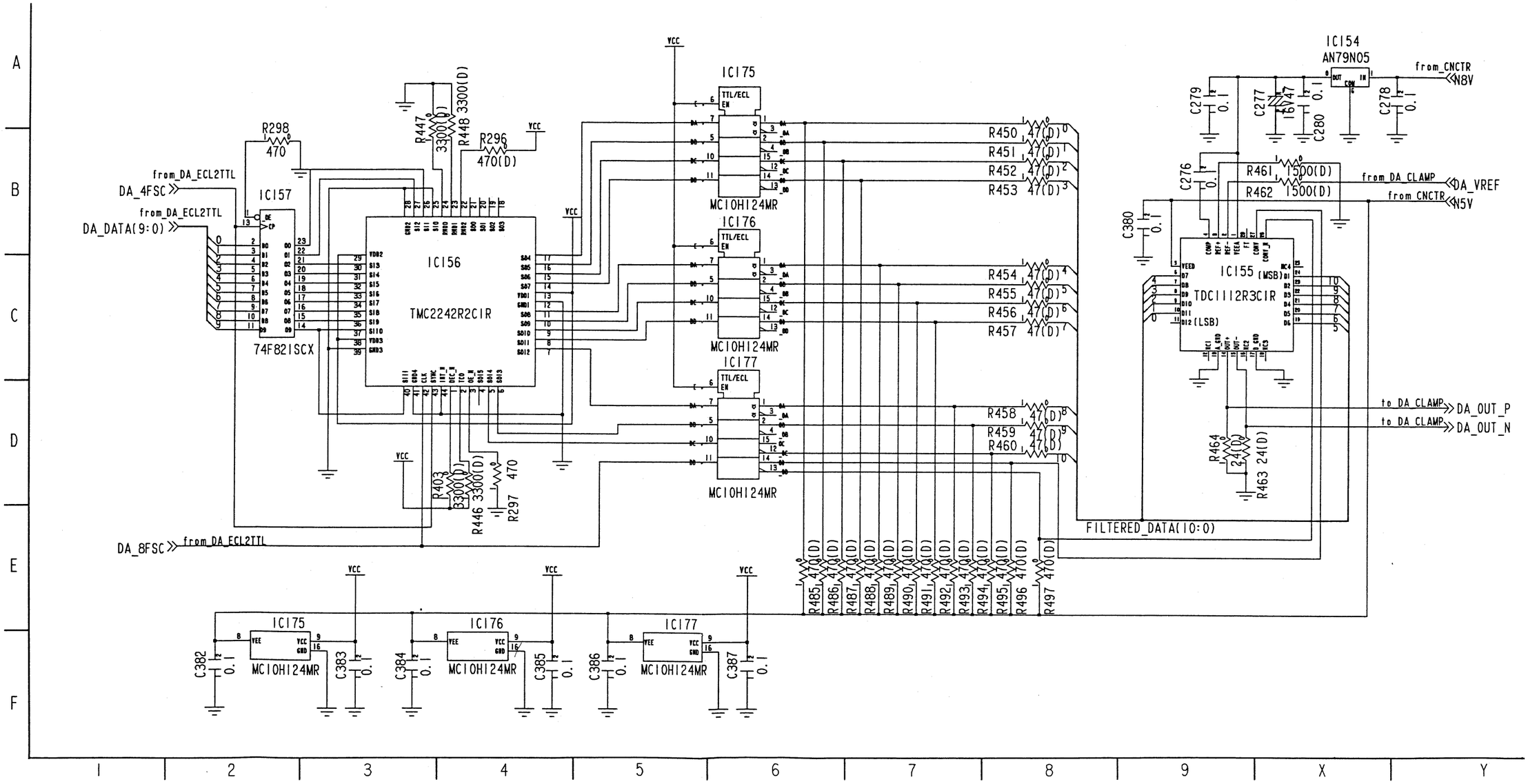

VIDEO A/D, D/A (S10 21/27) DA CLAMP SCHEMATIC DIAGRAM

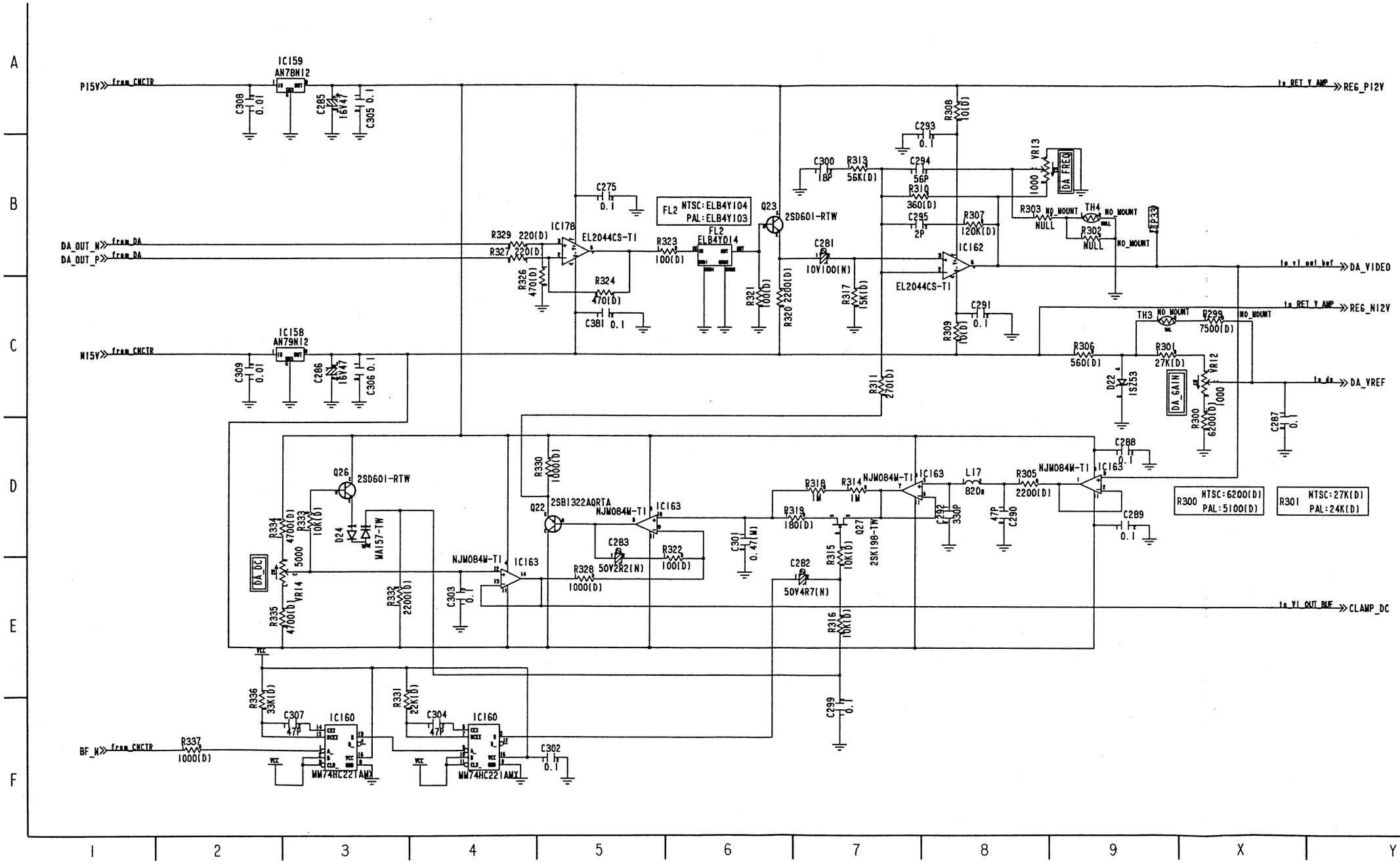

REVERSE SIDE

VIDEO A/D, D/A (S10 22/27) RET V AMP SCHEMATIC DIAGRAM

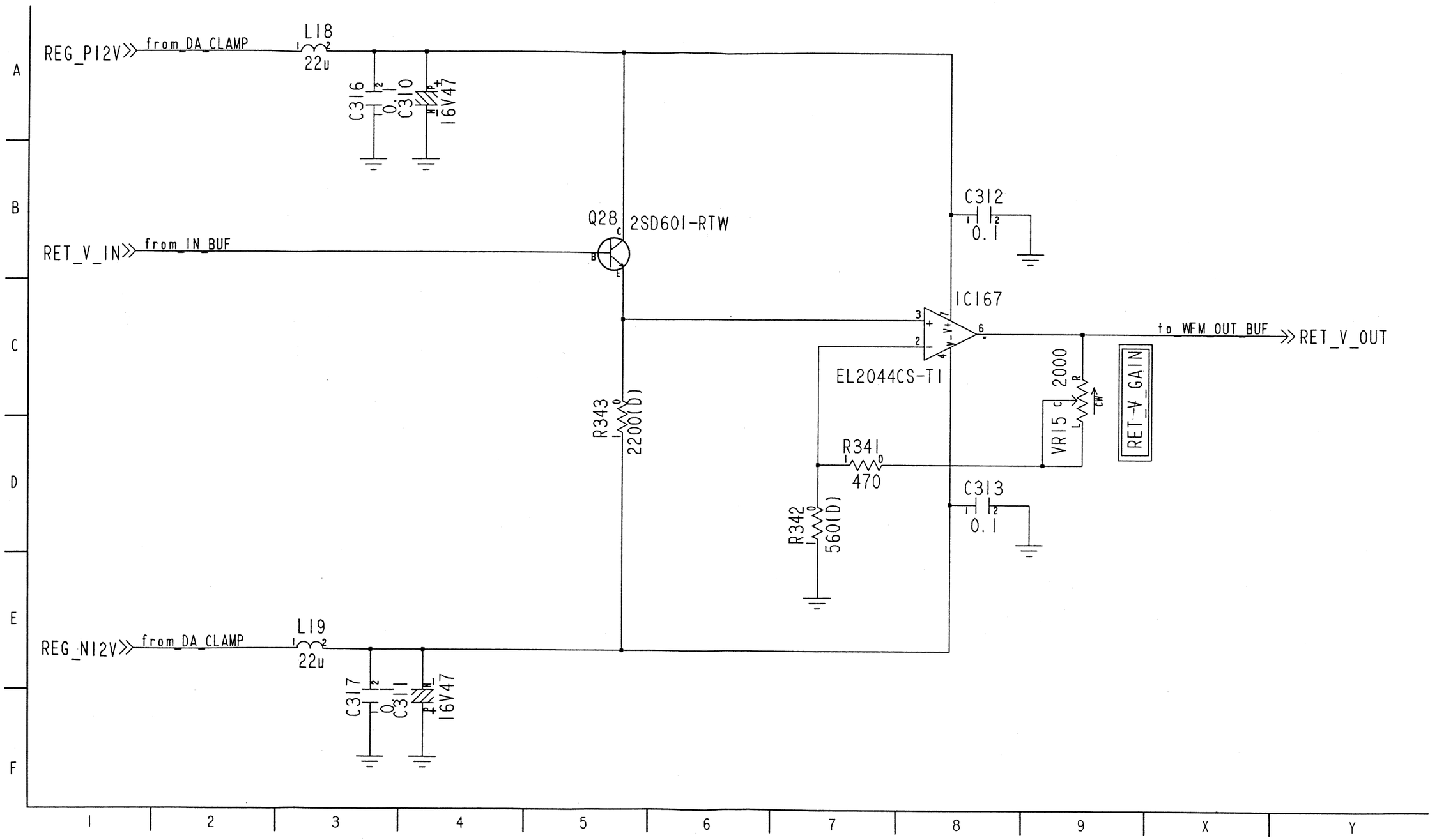

VIDEO A/D, D/A (S10 23/27) V1 OUT BUFFER SCHEMATIC DIAGRAM

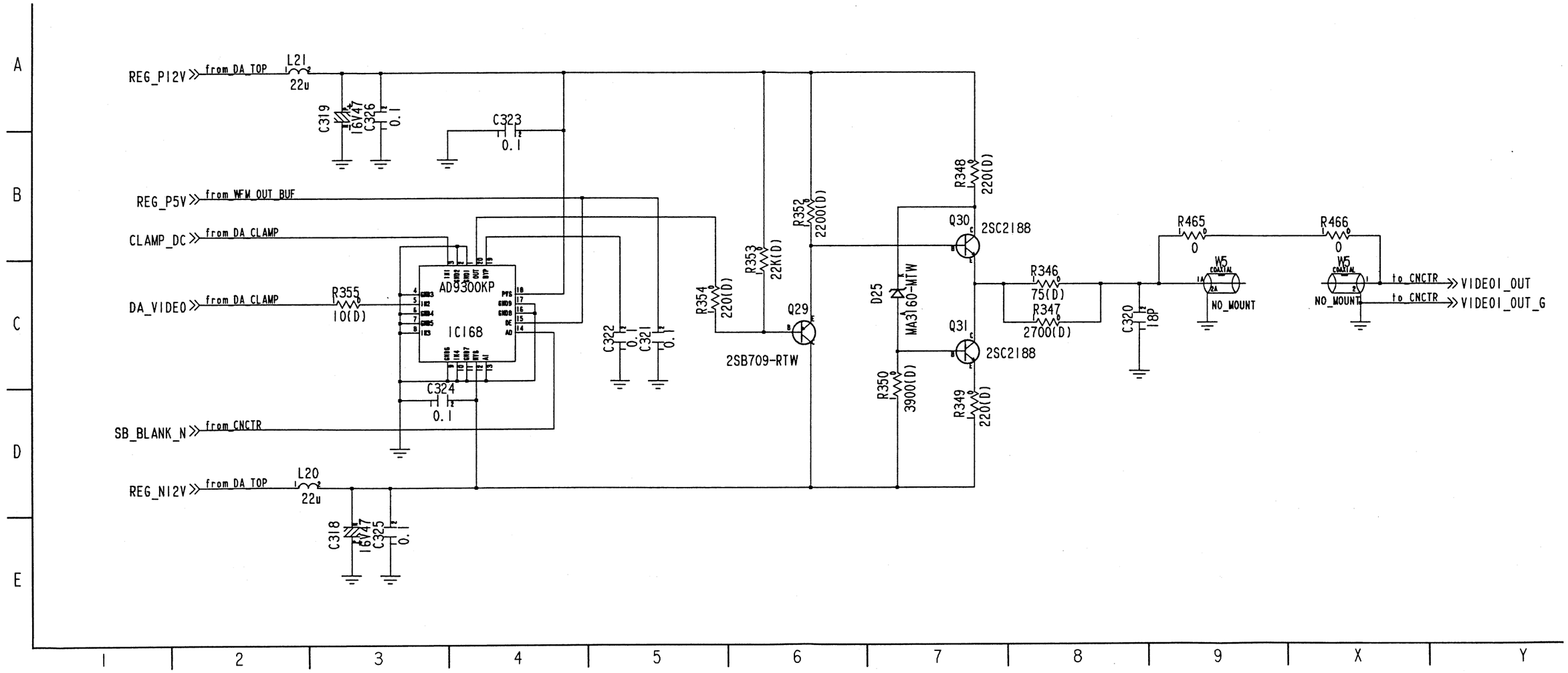

VIDEO A/D, D/A (S10 24/27) V2 OUT BUFFER SCHEMATIC DIAGRAM

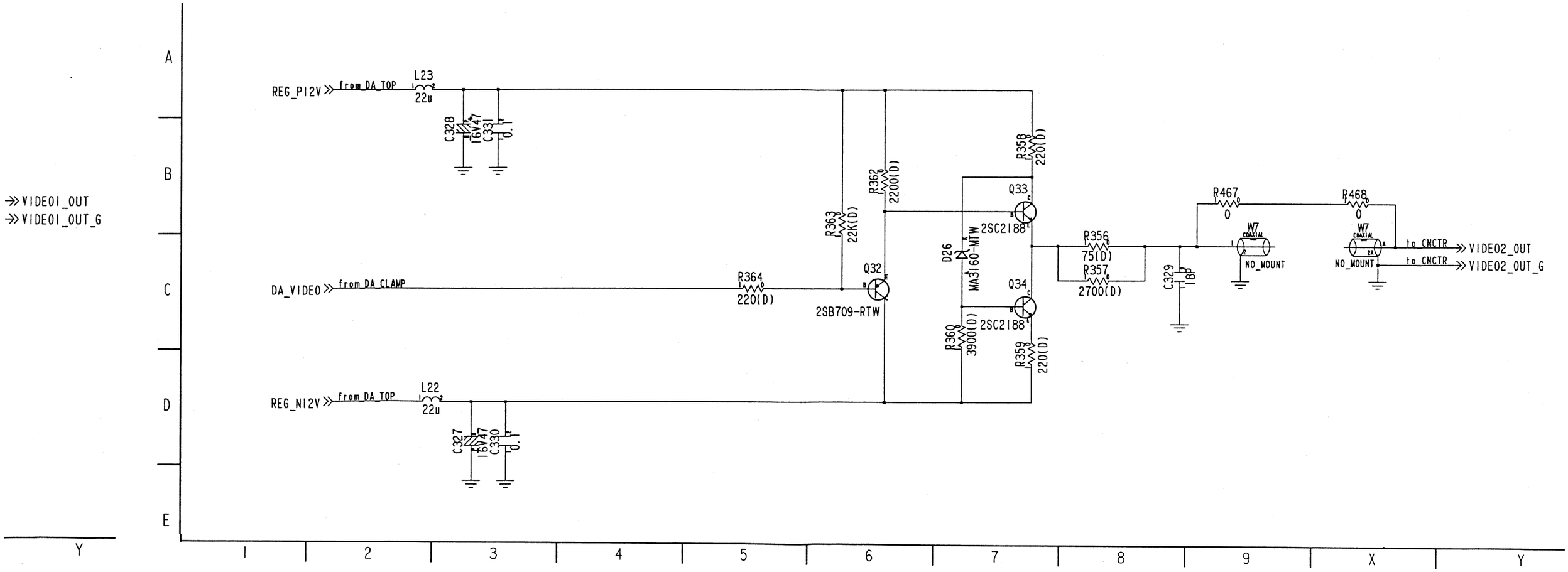

VIDEO A/D, D/A (S10 25/27) V3 OUT BUFFER SCHEMATIC DIAGRAM

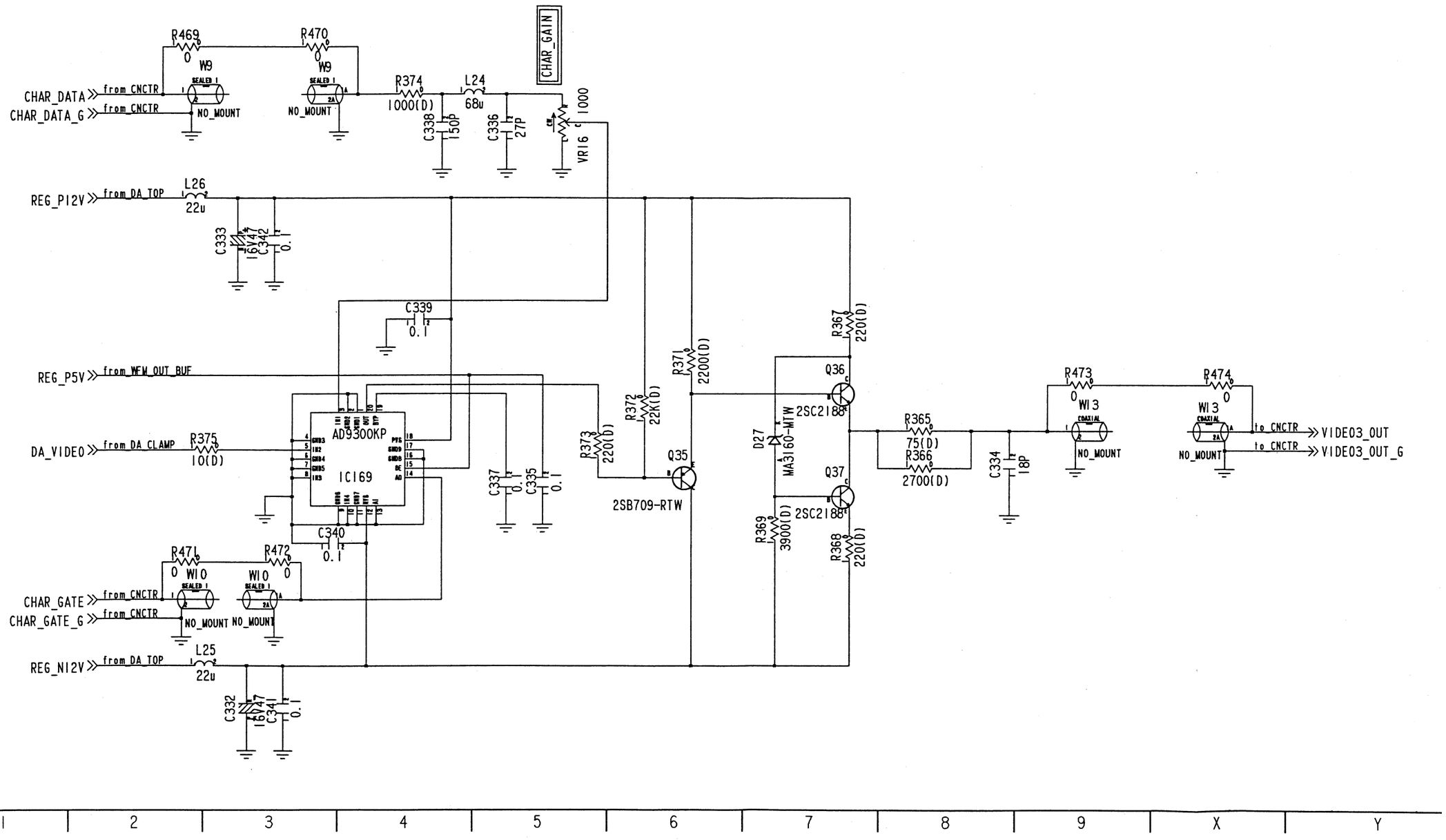

REVERSE SIDE

VIDEO A/D, D/A (S10 26/27) WFM OUT BUFFER SCHEMATIC DIAGRAM

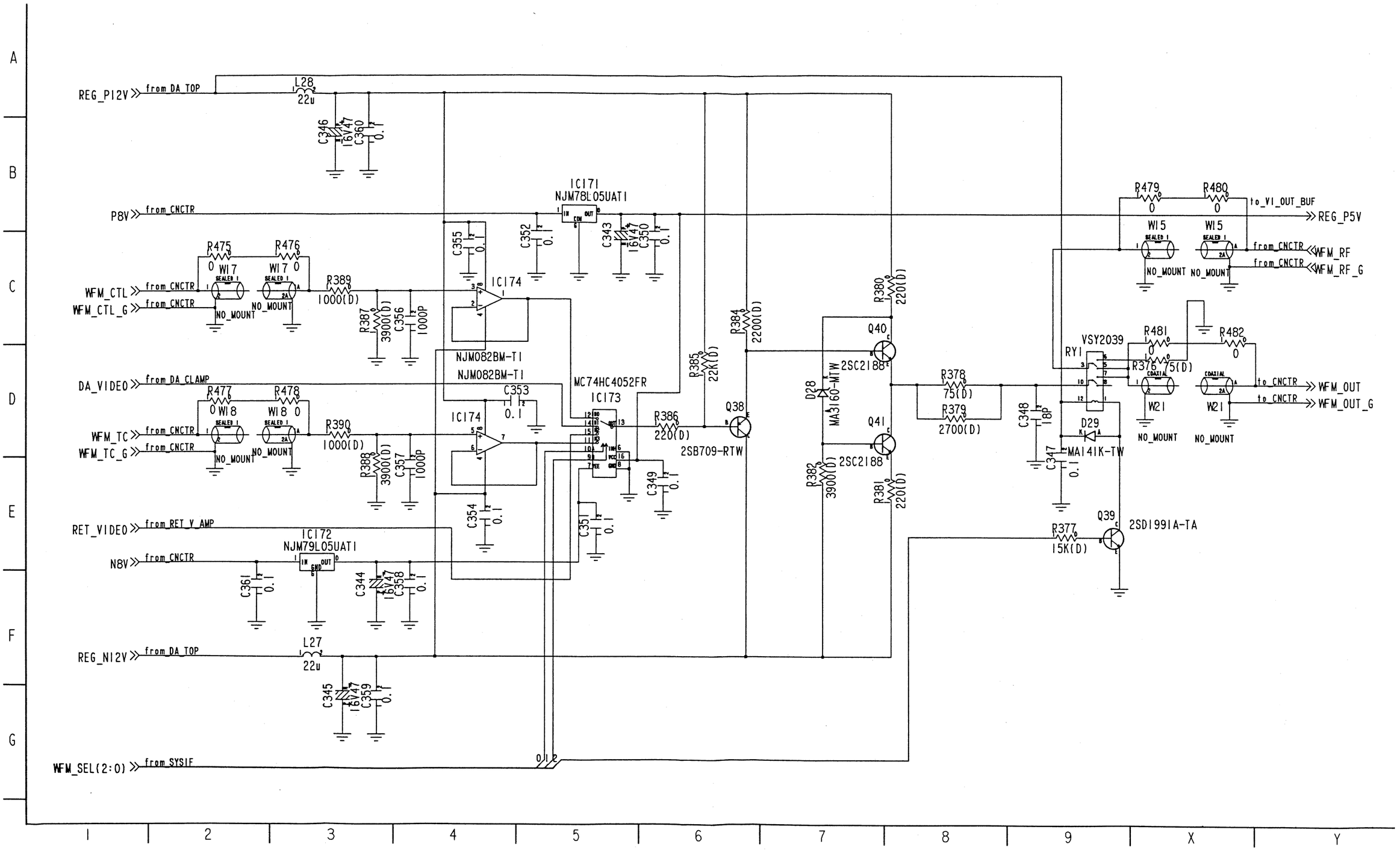

VIDEO A/D, D/A (S10 27/27) CONNECTOR SCHEMATIC DIAGRAM

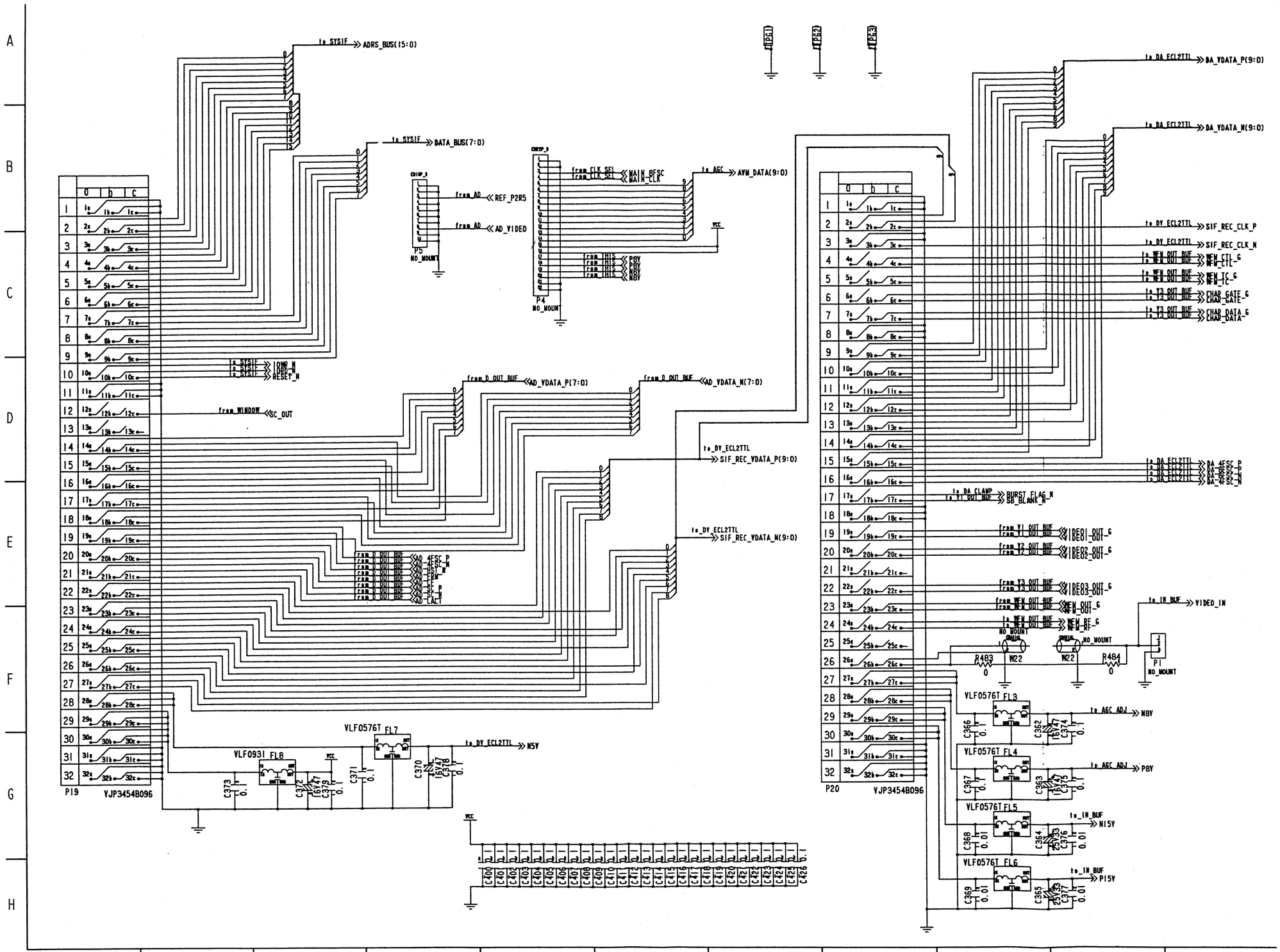

4—2—91

4—2—91

REC AMP (1/7) SCHEMATIC DIAGRAM

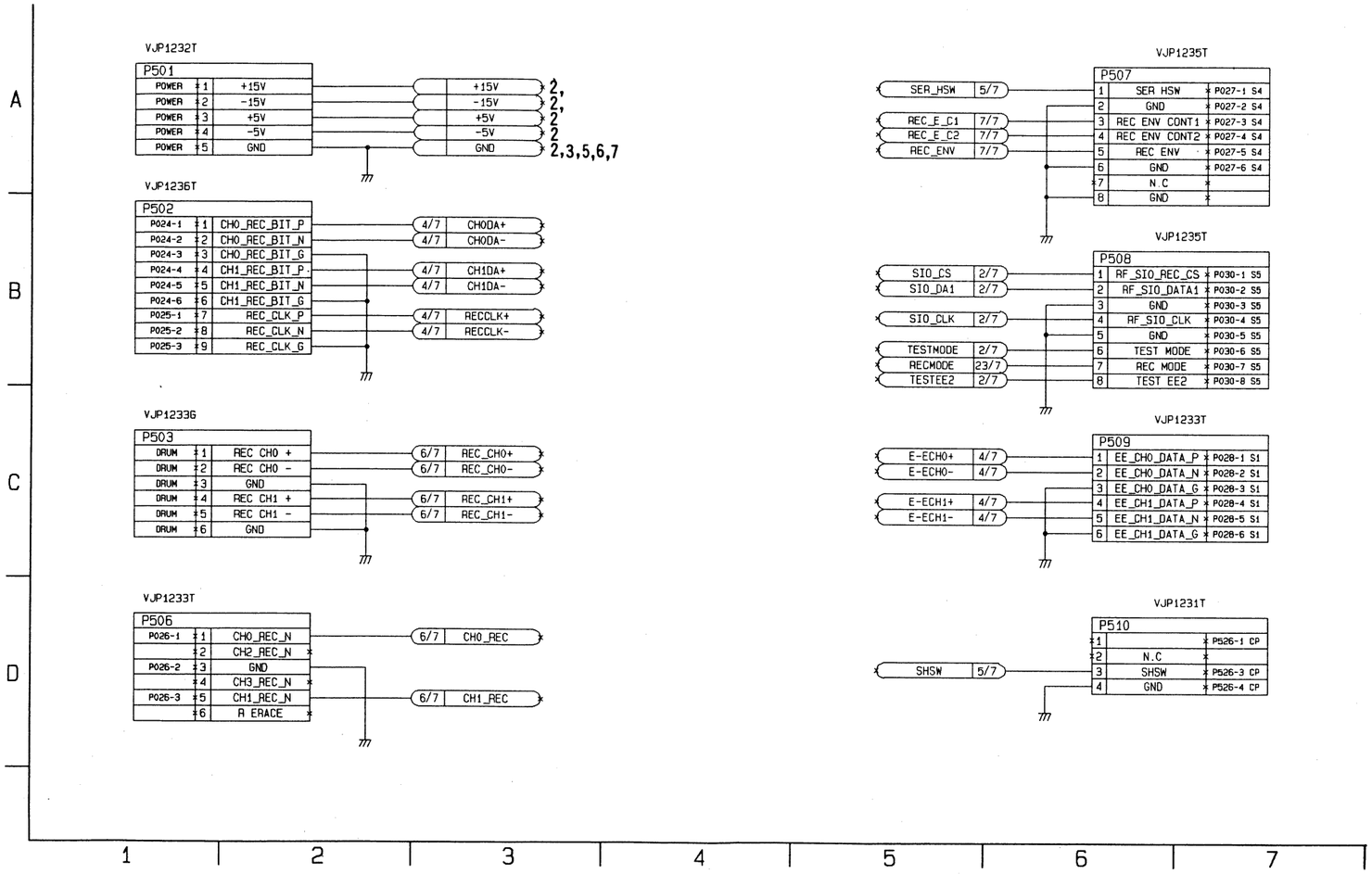

REC AMP (2/7) SCHEMATIC DIAGRAM

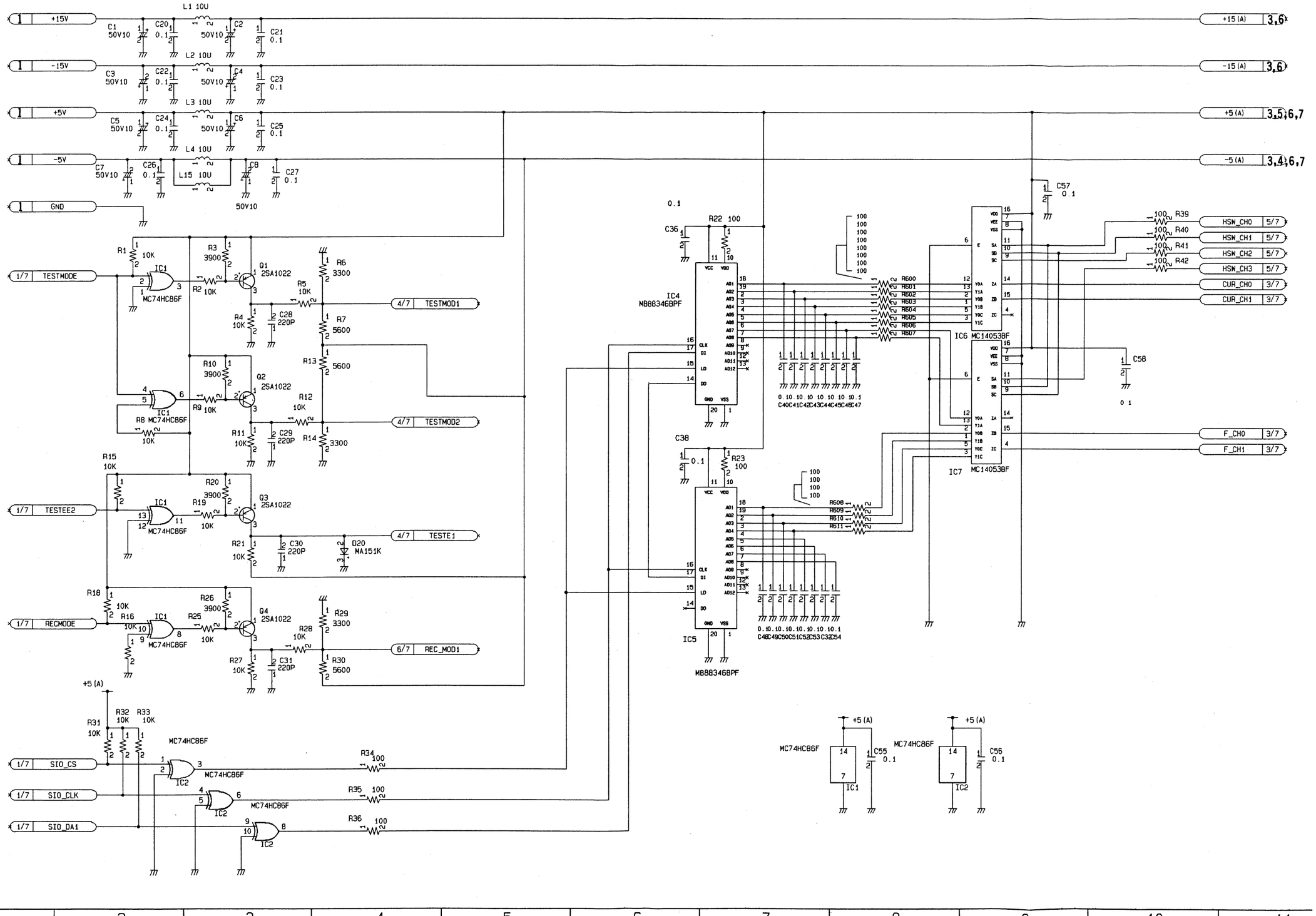

REC AMP (3/7) SCHEMATIC DIAGRAM

3,6

3,6

3,5;6,7

3,4;6,7

0 5/7
1 5/7
2 5/7
3 5/7
0 3/7
1 3/7

3/7
3/7

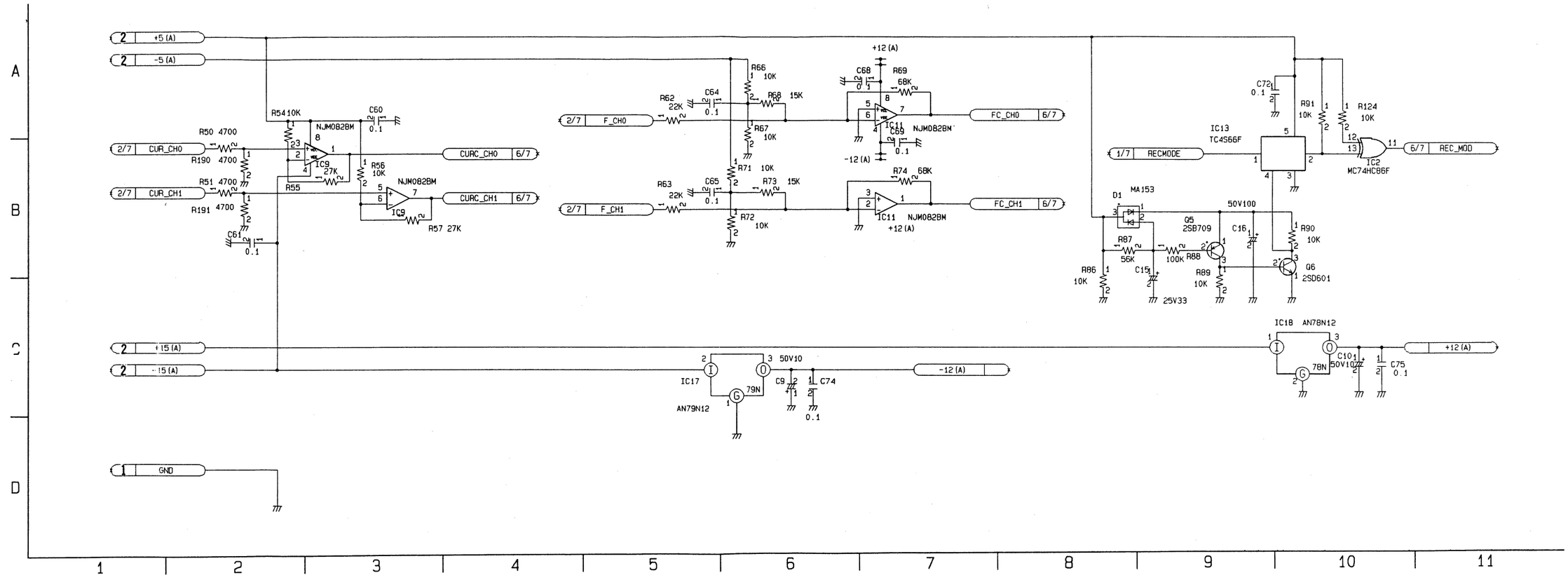

REC AMP (4/7) SCHEMATIC DIAGRAM

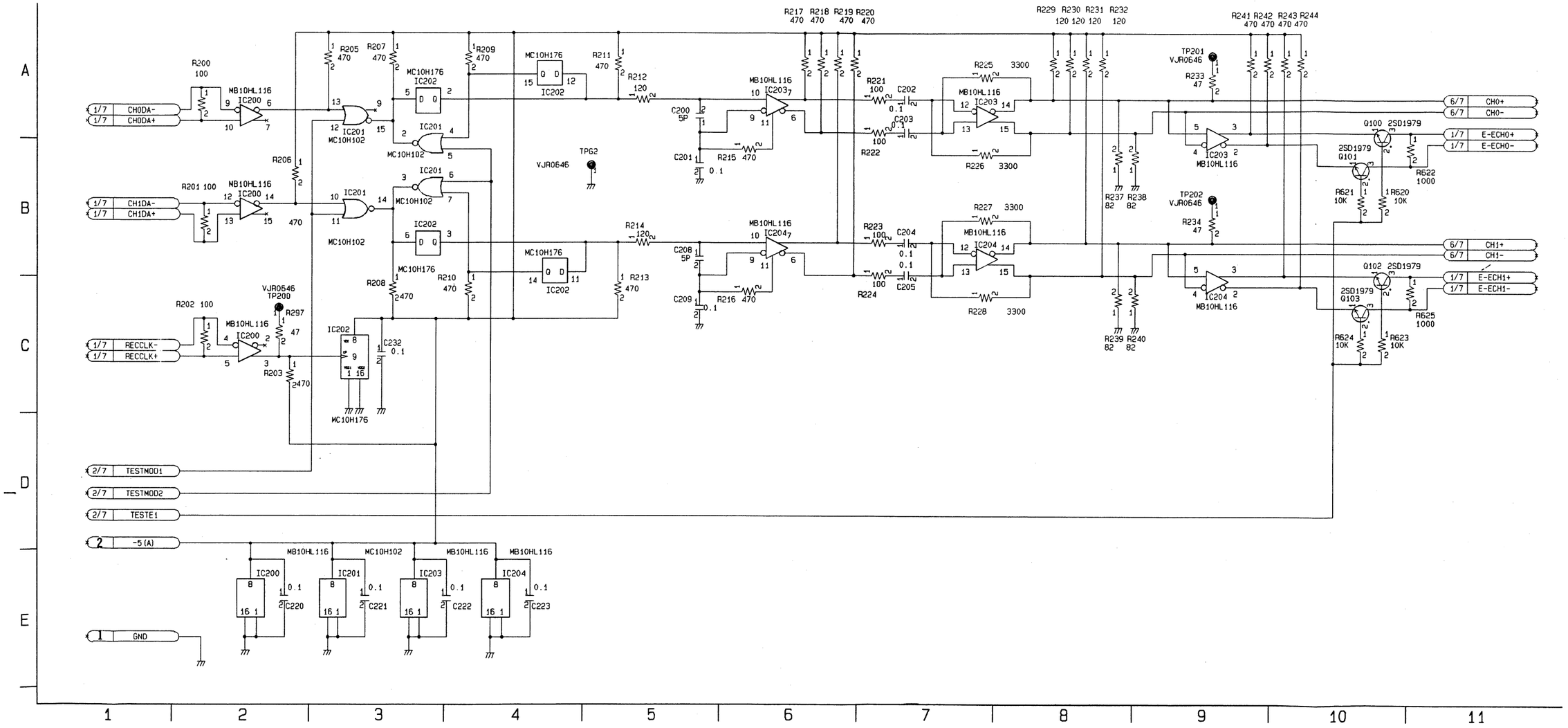

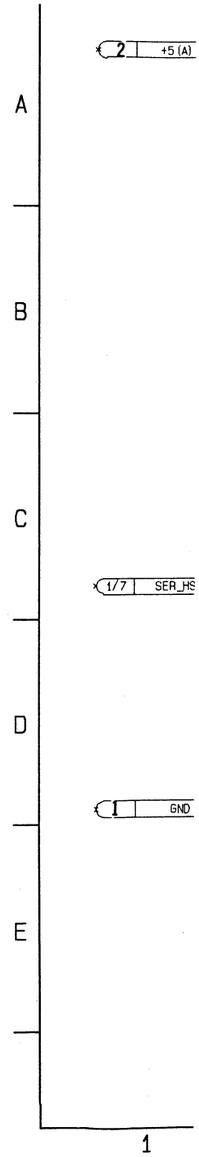

4—2—94

REVERSE SIDE

REC AMP (2/7, 3/7)

REC AMP (5/7) SCHEMATIC DIAGRAM

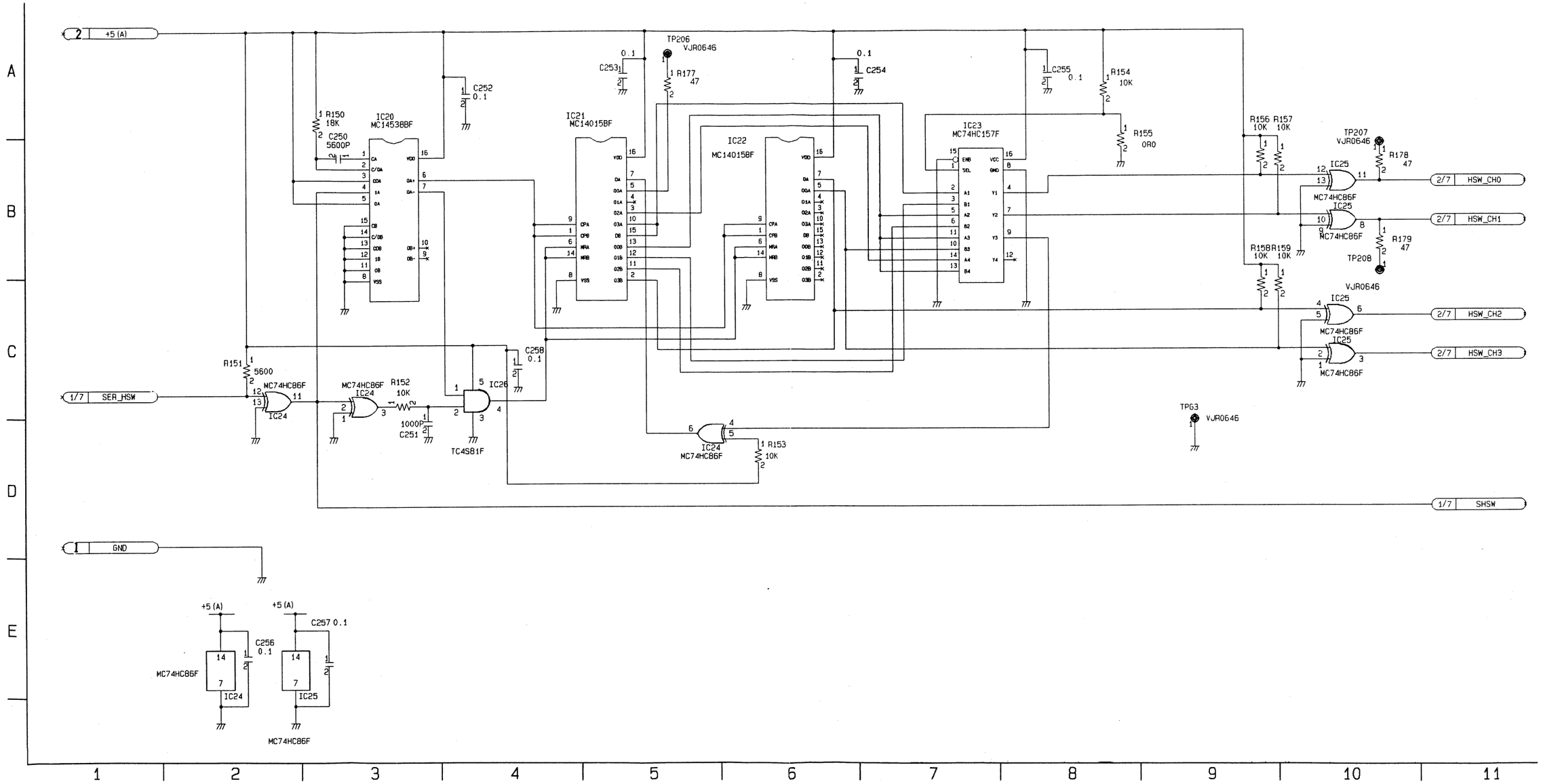

REC AMP (6/7) SCHEMATIC DIAGRAM

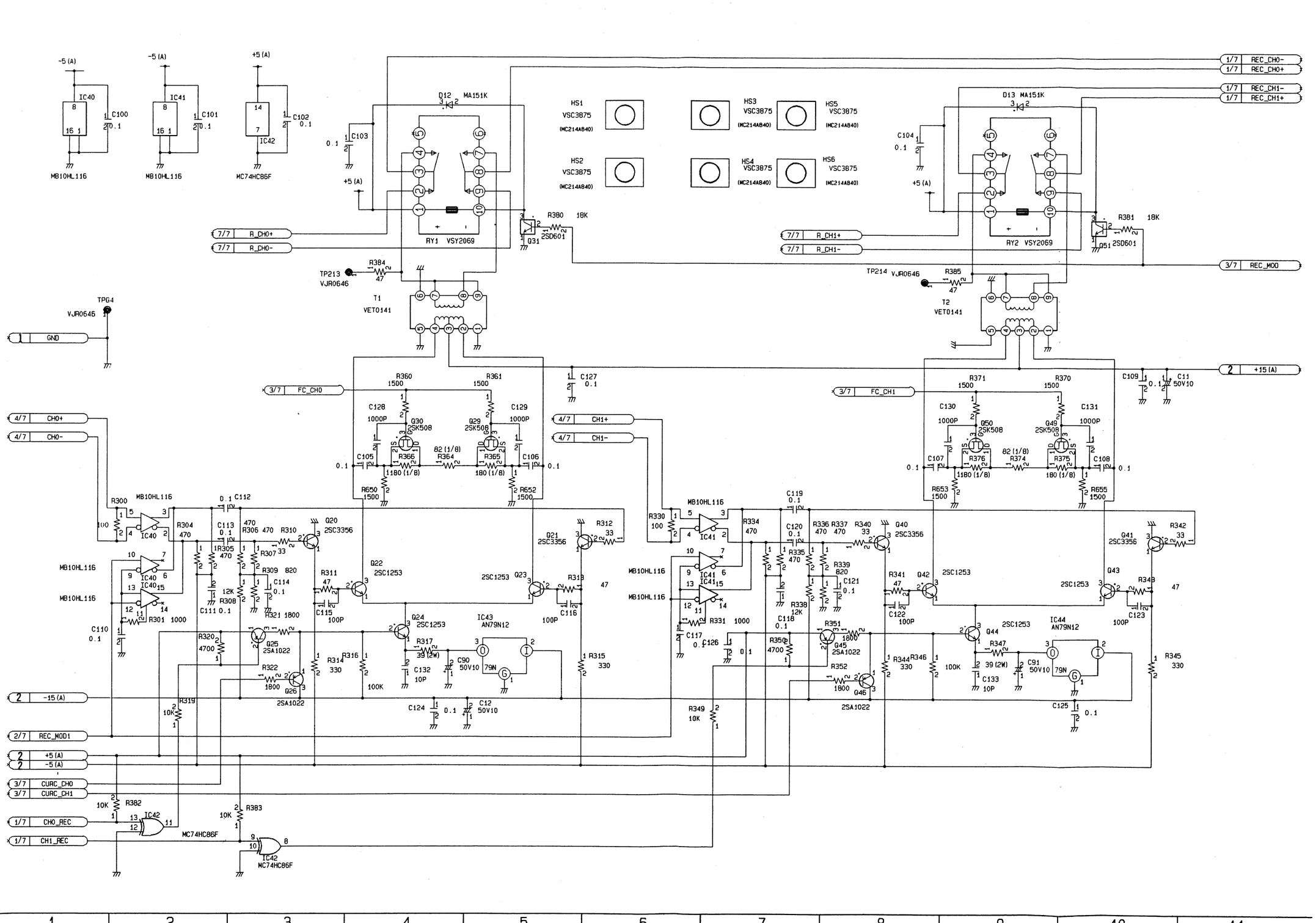

REC AMP (7/7) SCHEMATIC DIAGRAM

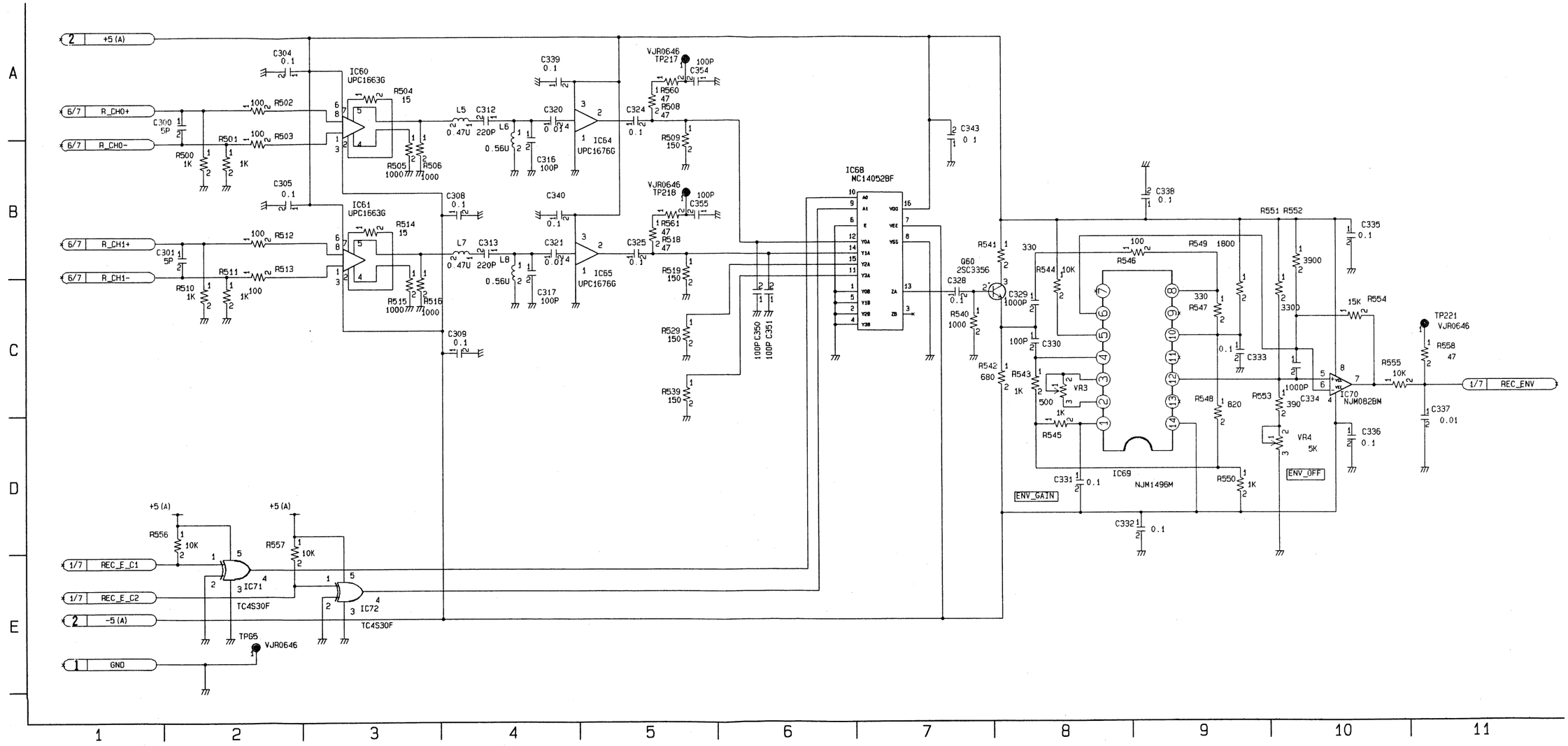

HEAD AMP (1/2) SCHEMATIC DIAGRAM

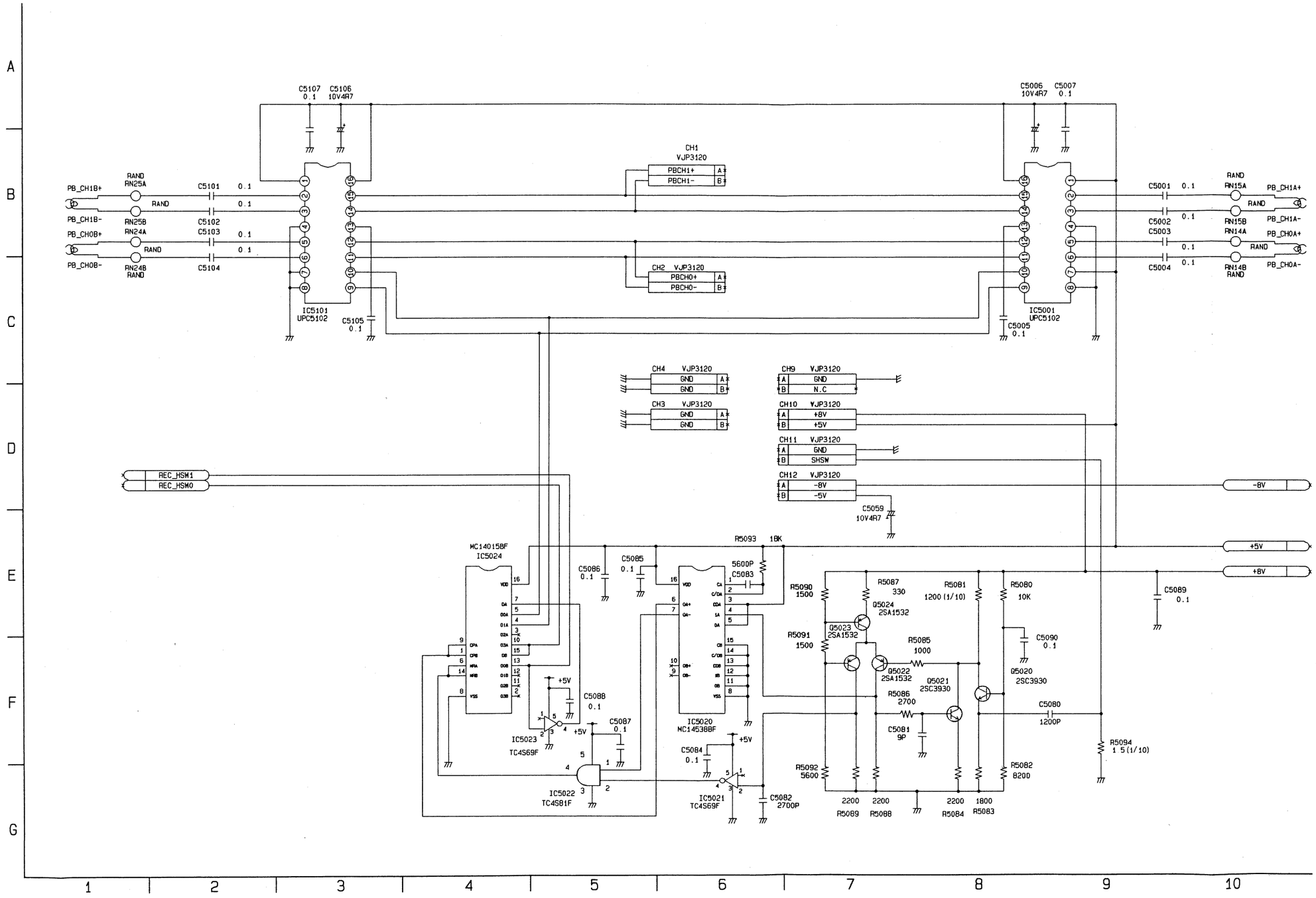

REVERSE SIDE

REC AMP (6/7, 7/7)

HEAD AMP (2/2) SCHEMATIC DIAGRAM

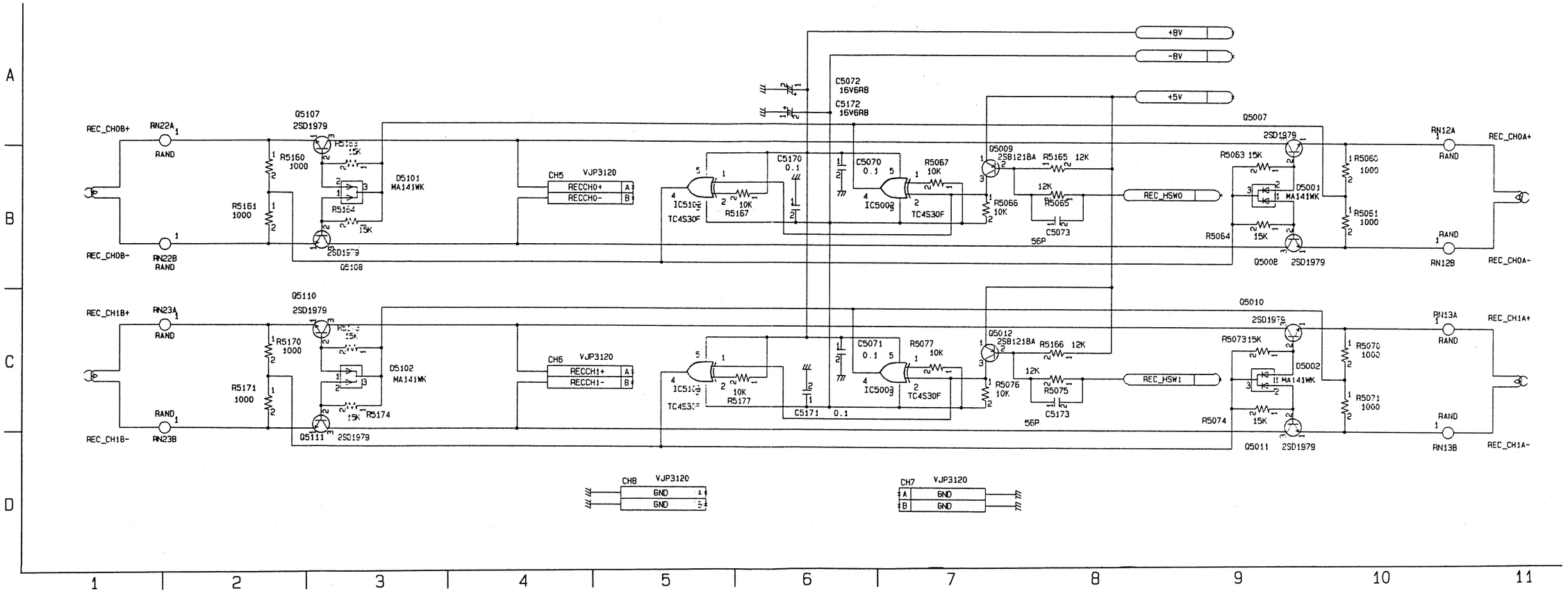

SERIAL I/F (1/8) OVERALL SCHEMATIC DIAGRAM

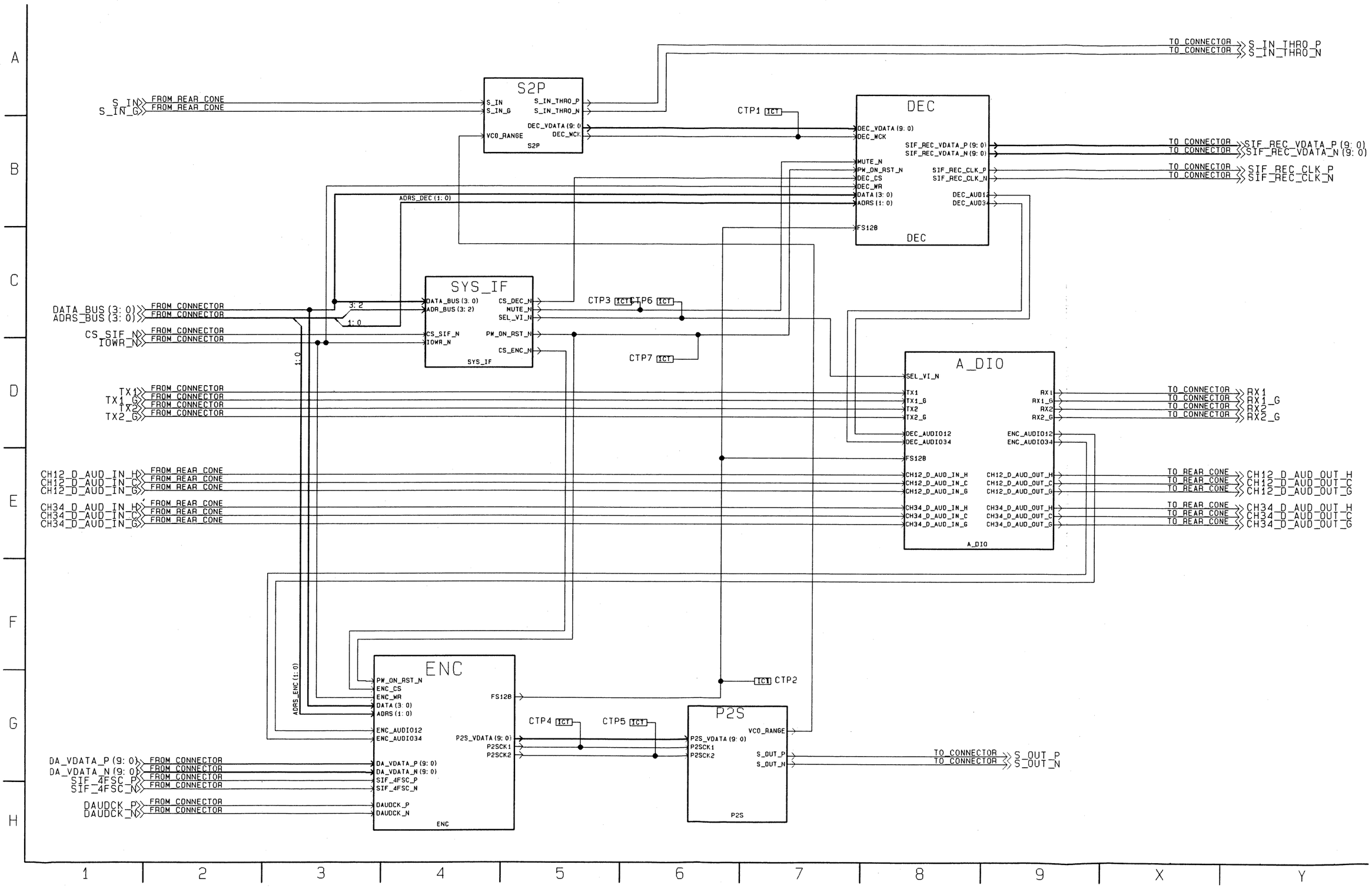

SERIAL I/F (2/8) CONNECTOR SCHEMATIC DIAGRAM

N_THRO_P
N_THRO_N

REC_VDATA_P(9:0)
REC_VDATA_N(9:0)

REC_CLK_P
REC_CLK_N

_G
_G

2_D_AUD_OUT_H
2_D_AUD_OUT_C
2_D_AUD_OUT_G

4_D_AUD_OUT_H
4_D_AUD_OUT_C
4_D_AUD_OUT_G

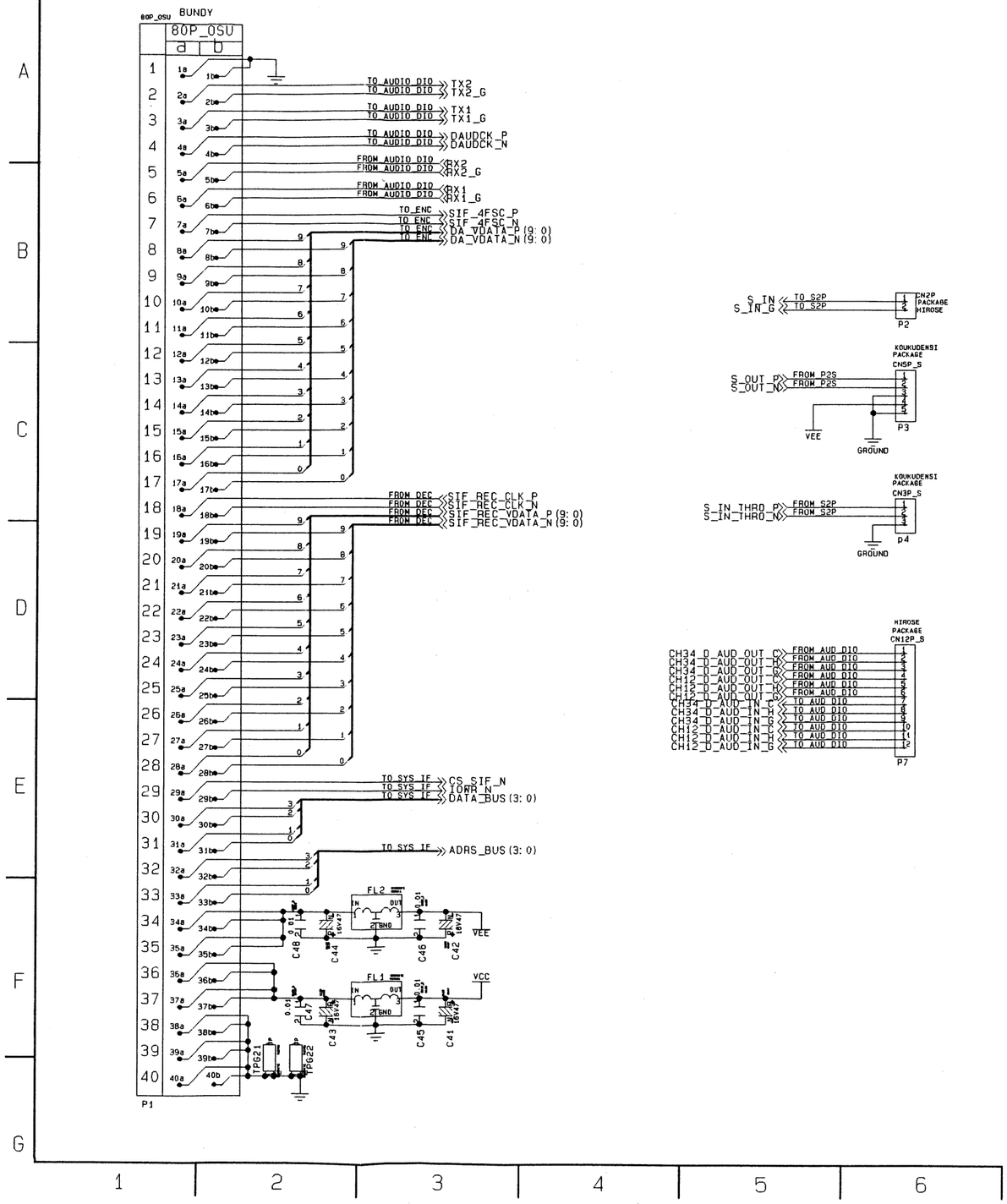

SERIAL I/F (3/8) SYS IF SCHEMATIC DIAGRAM

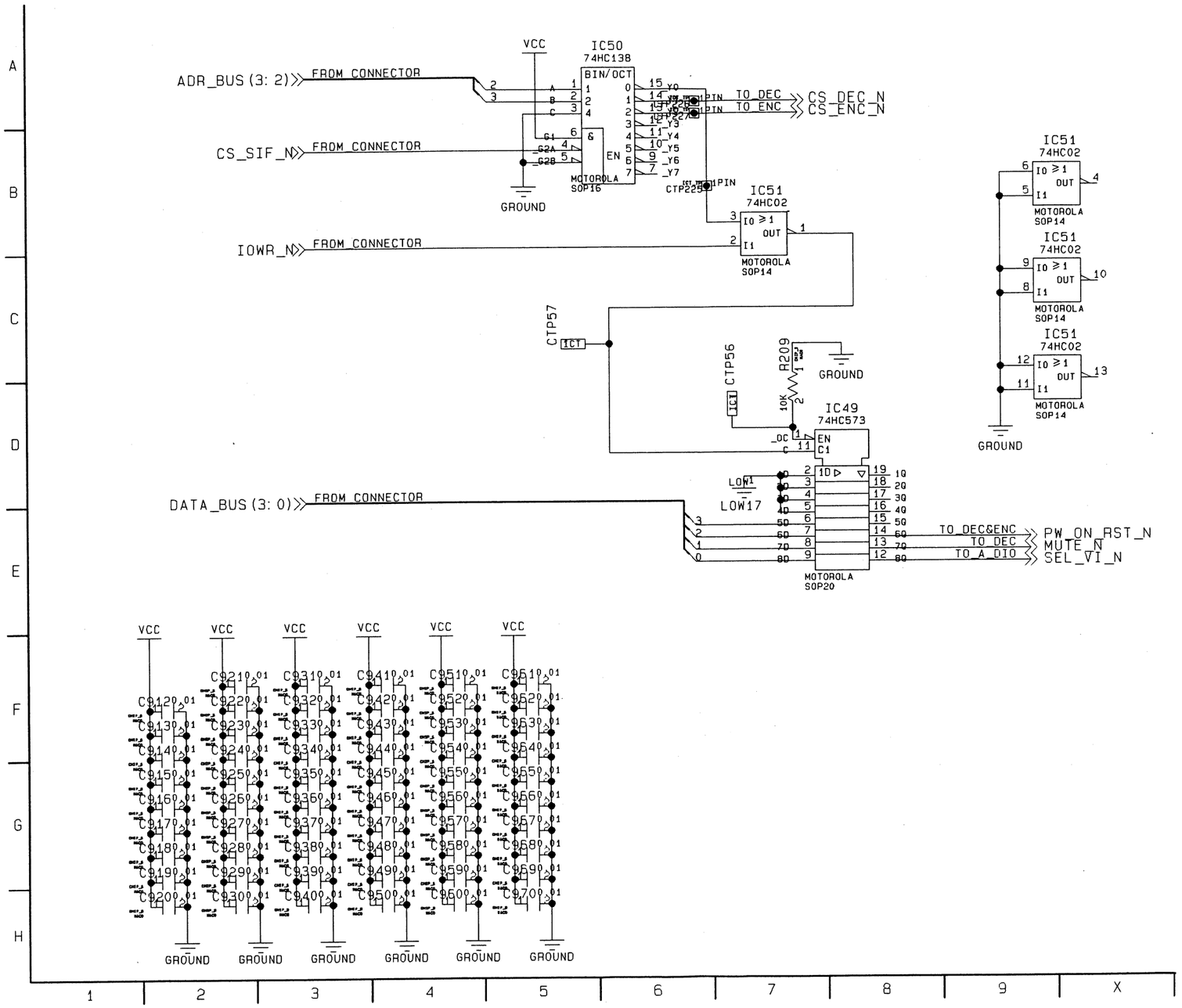

REVERSE SIDE

4—2—98

SERIAL I/F (1/8, 2/8)

SERIAL I/F (4/8) S2P SCHEMATIC DIAGRAM

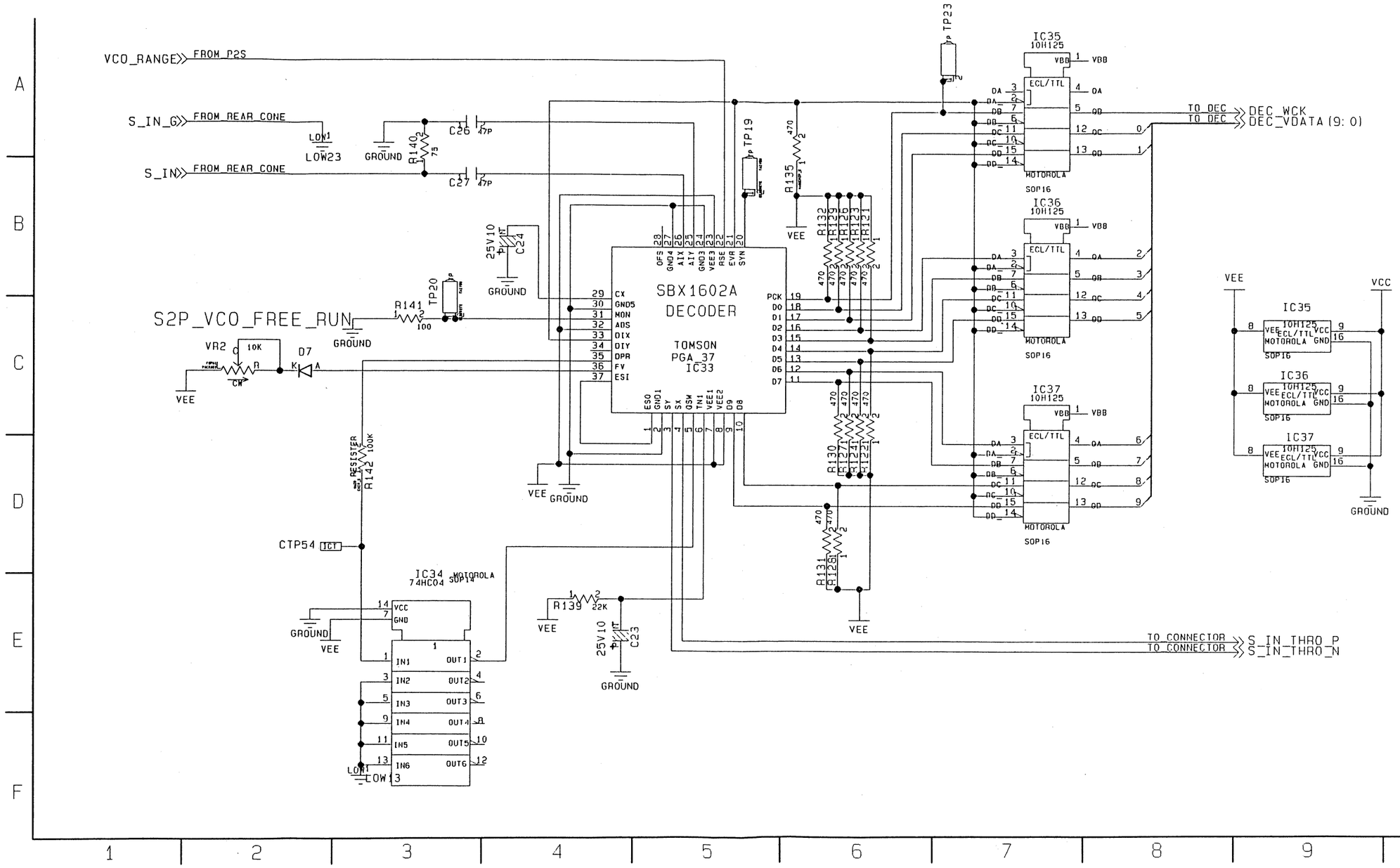

SERIAL I/F (5/8) DEC SCHEMATIC DIAGRAM

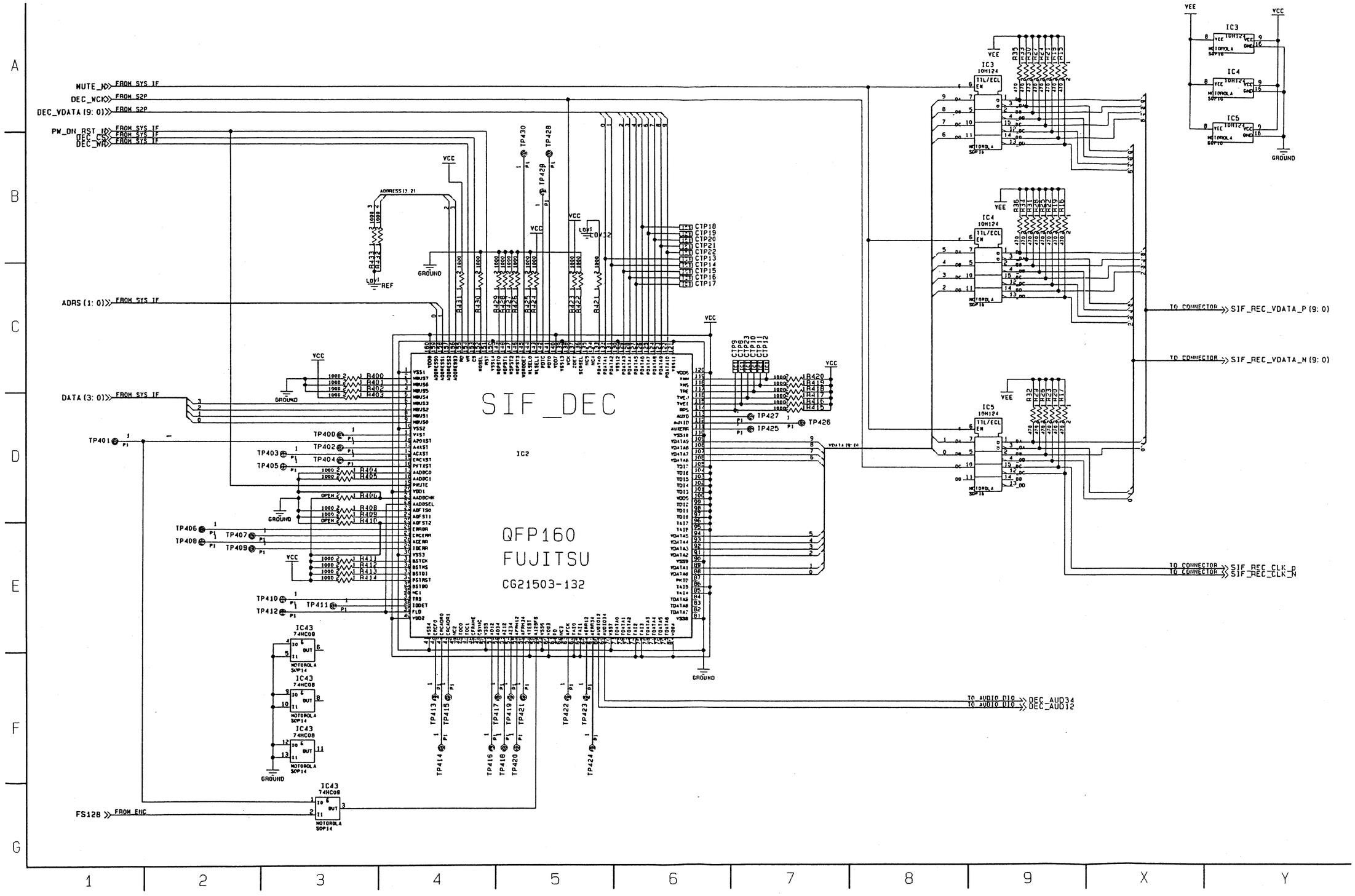

SERIAL I/F (6/8) ENC SCHEMATIC DIAGRAM

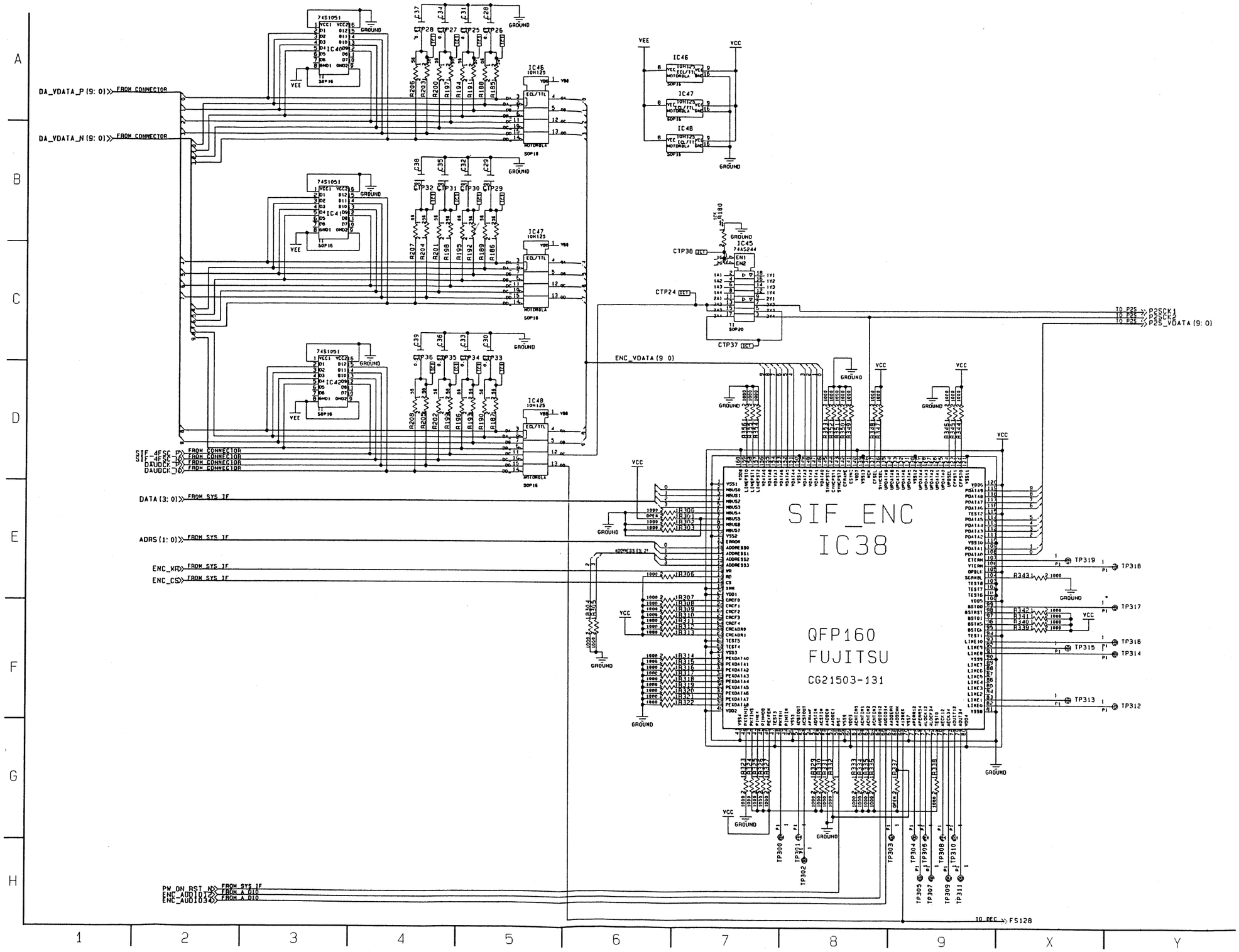

SERIAL I/F (7/8) P2S SCHEMATIC DIAGRAM

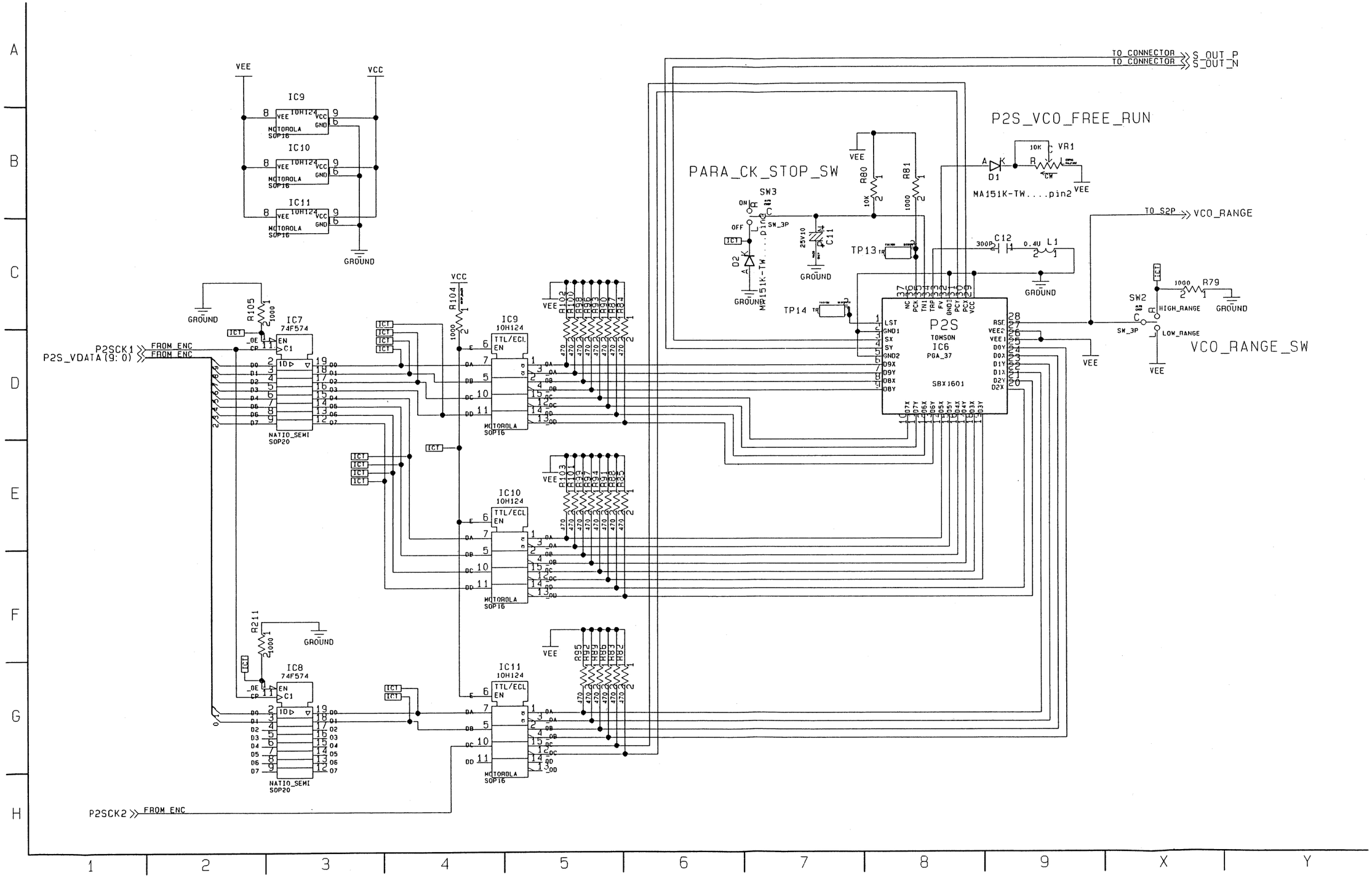

REVERSE SIDE

SERIAL I/F (5/8, 6/8)

SERIAL I/F (8/8) A DIO SCHEMATIC DIAGRAM

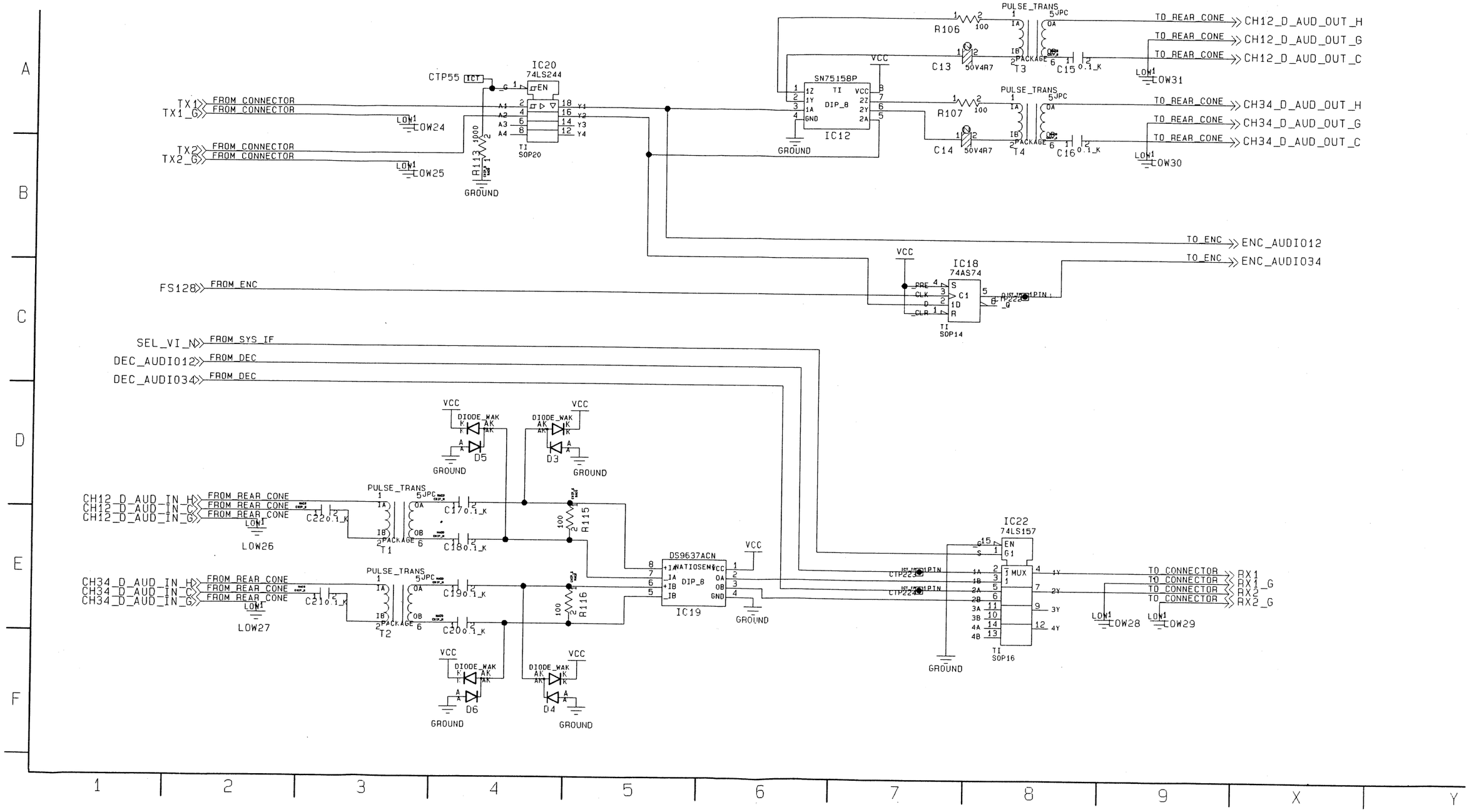

SERIAL I/O SCHEMATIC DIAGRAM

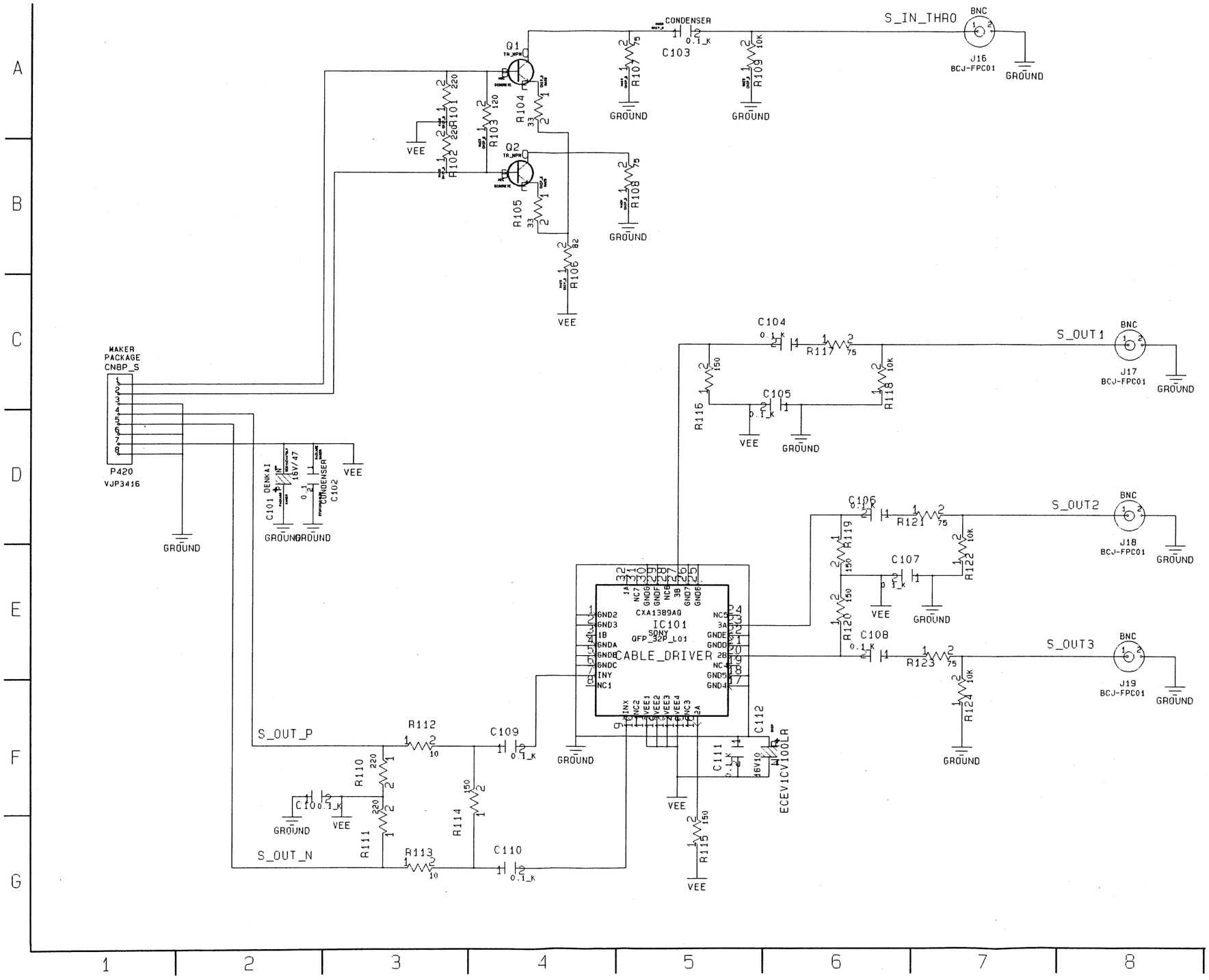

4—2—101

CYLINDER POWER SCHEMATIC DIAGRAM

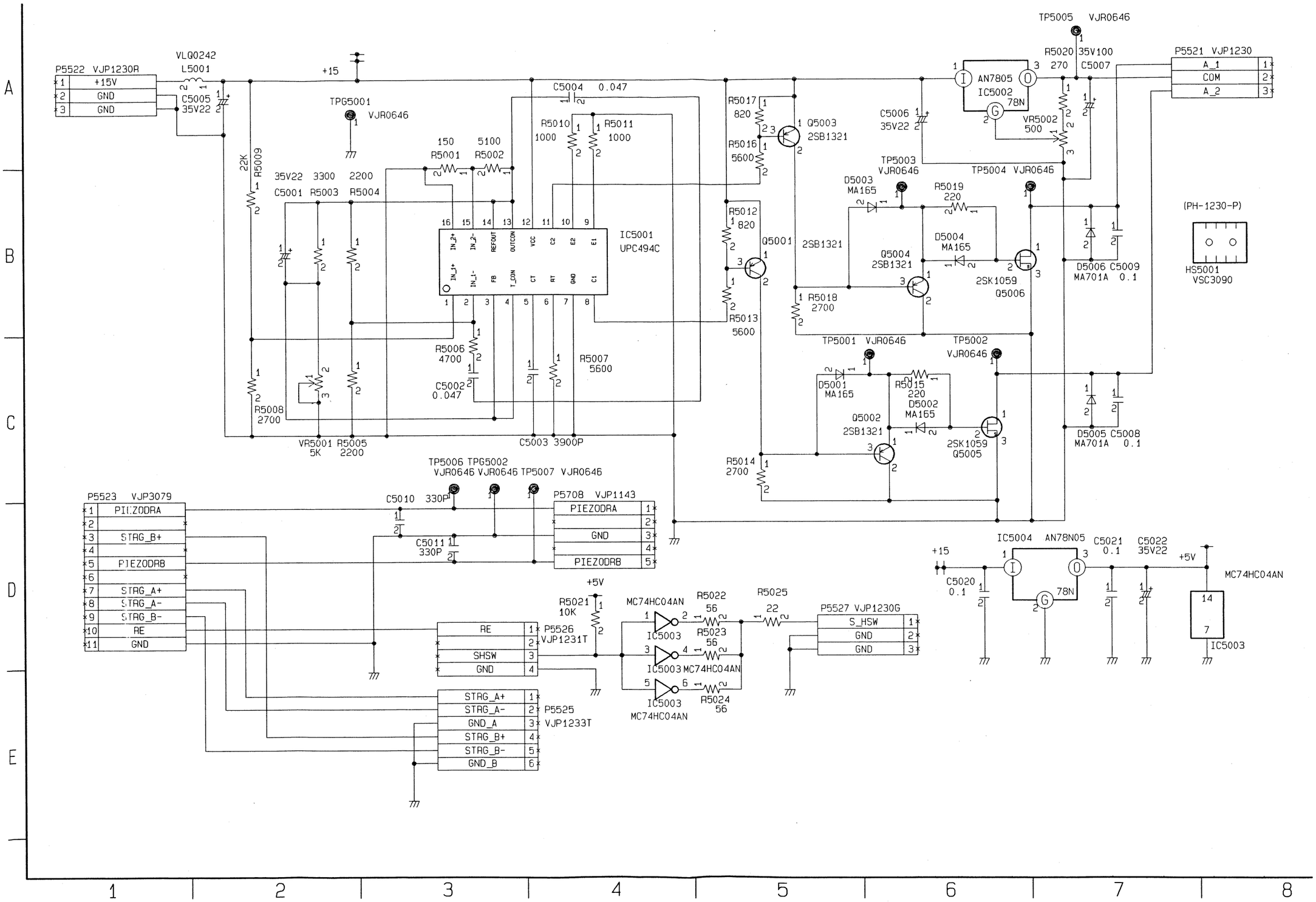

REVERSE SIDE

SERIAL I/O

4—2—102

CYLINDER REGLATOR SCHEMATIC DIAGRAM

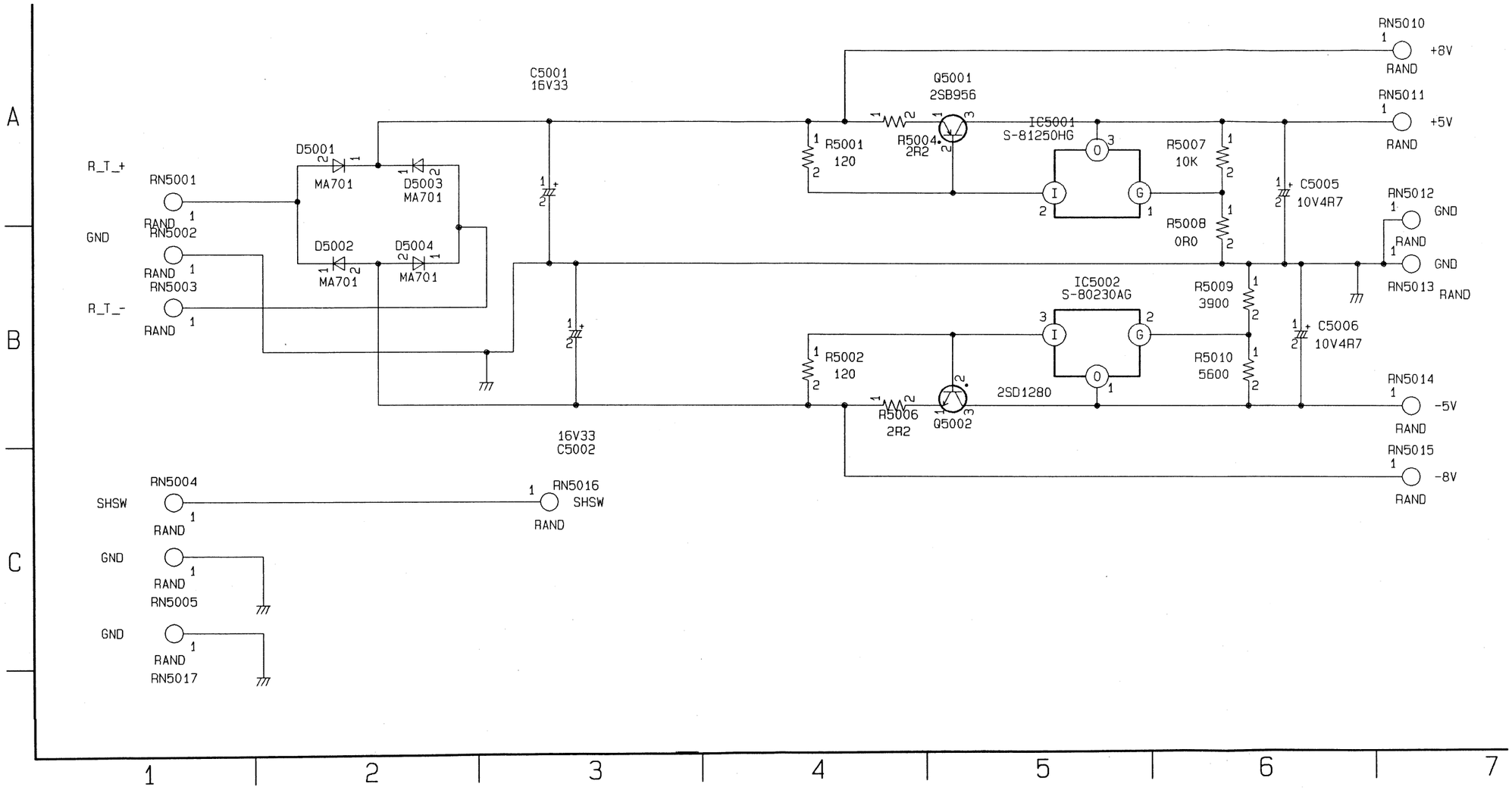

4—2—103

SERVO CONTROL SCHEMATIC DIAGRAM

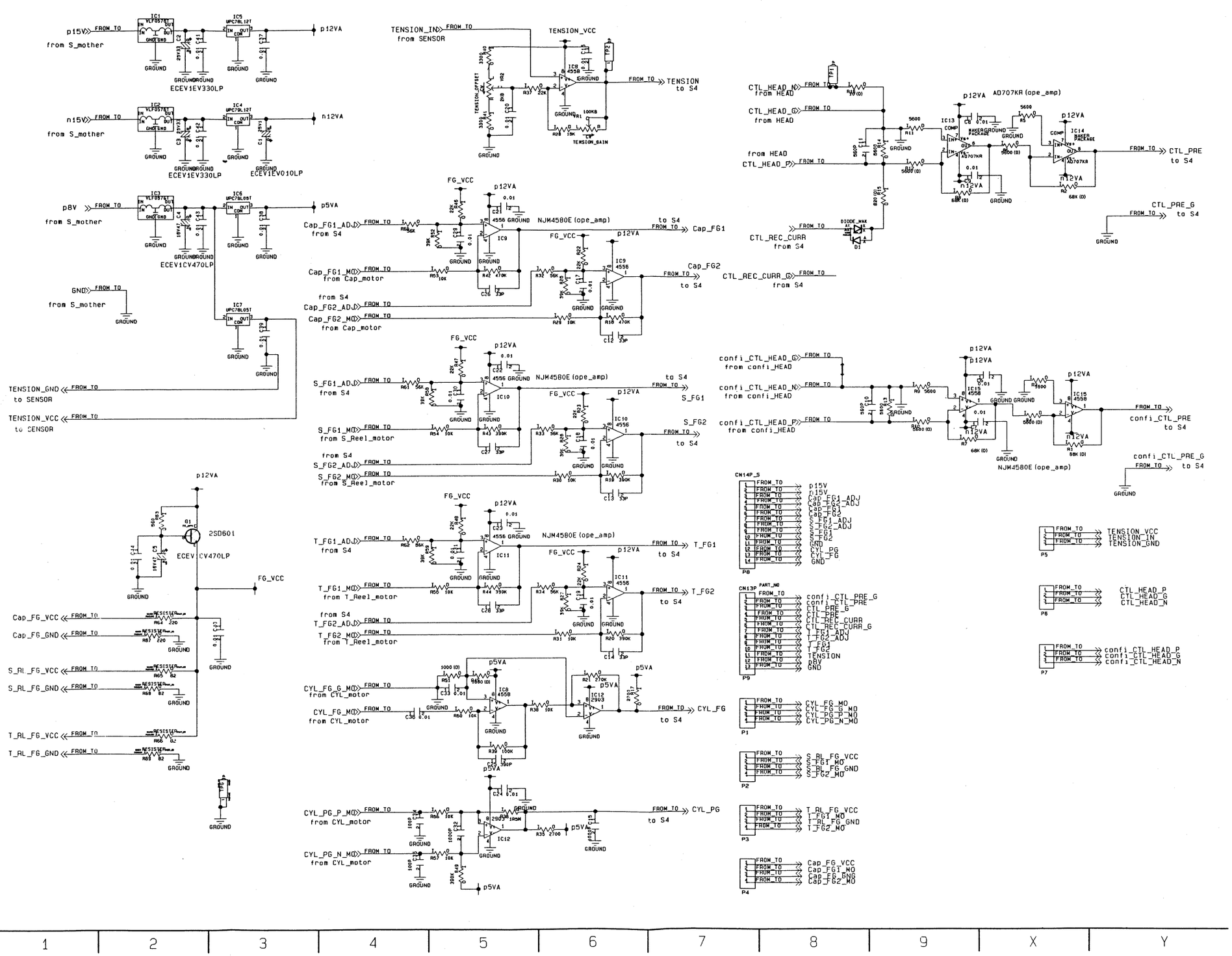

REVERSE SIDE

CYLINDER REGULATOR

4—2—104

MECHANISM INTERFACE SCHEMATIC DIAGRAM

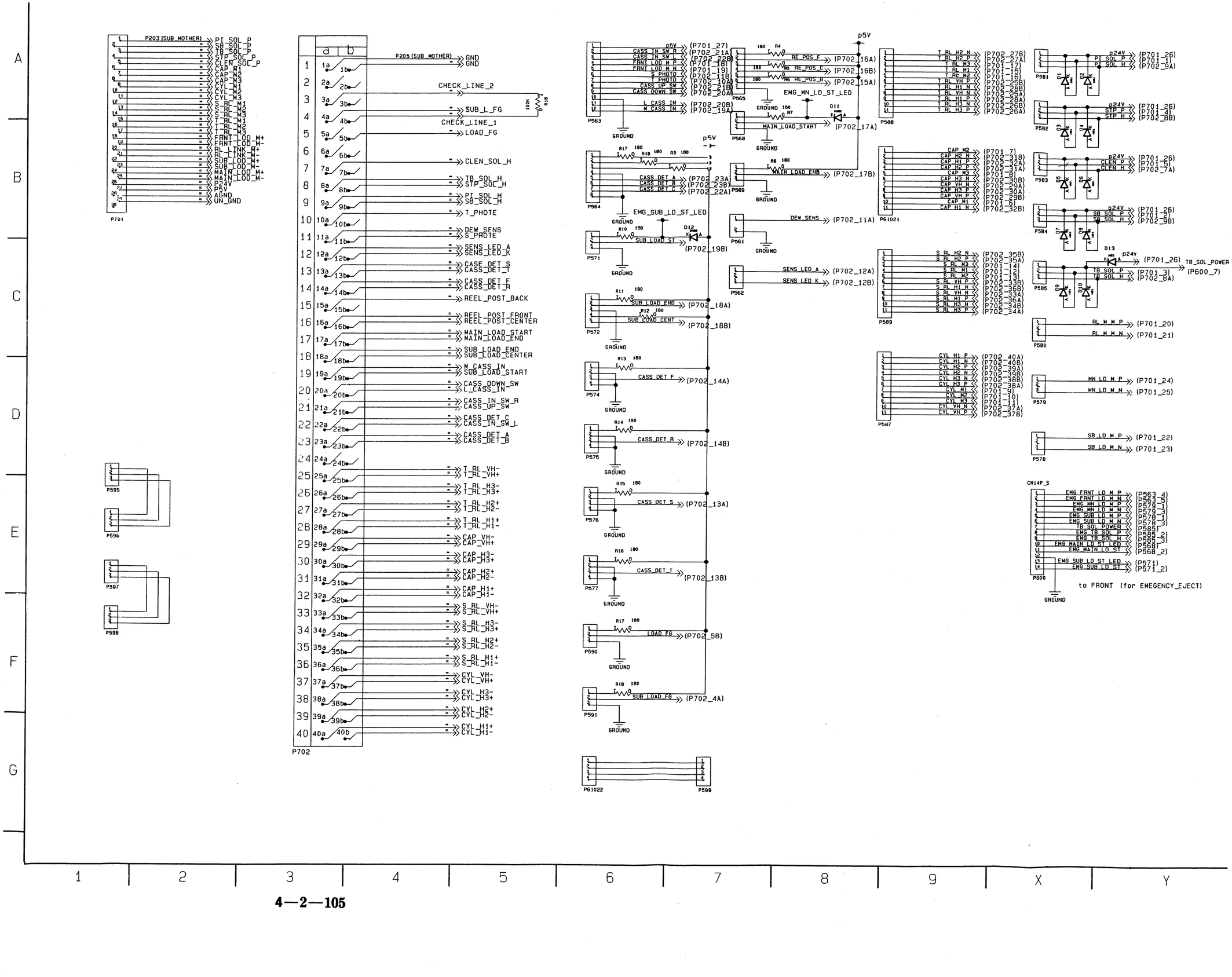

EM EJECT SCHEMATIC DIAGRAM

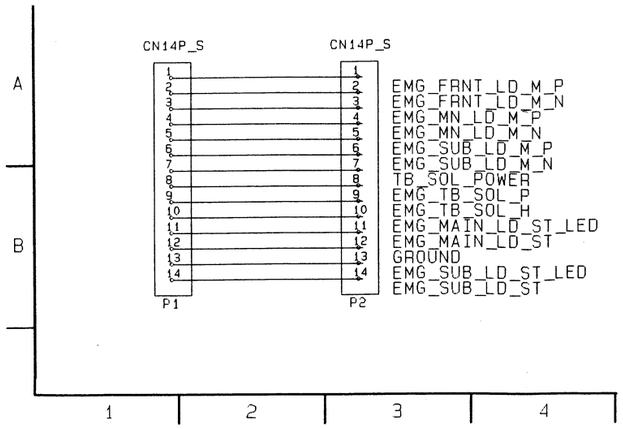

ERR LED SCHEMATIC DIAGRAM

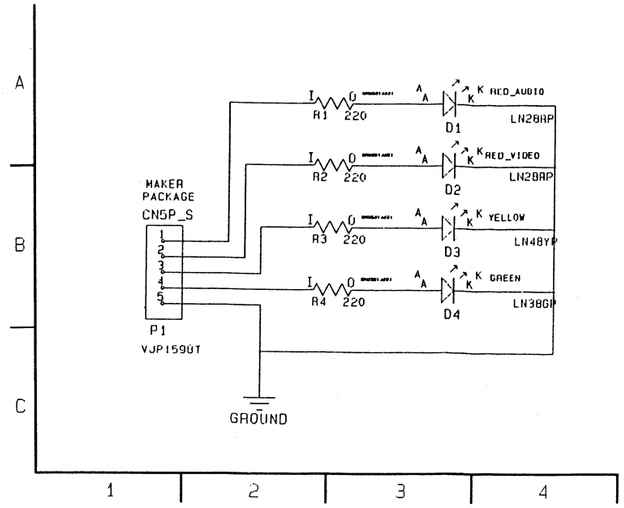

AUTO OFF LED SCHEMATIC DIAGRAM

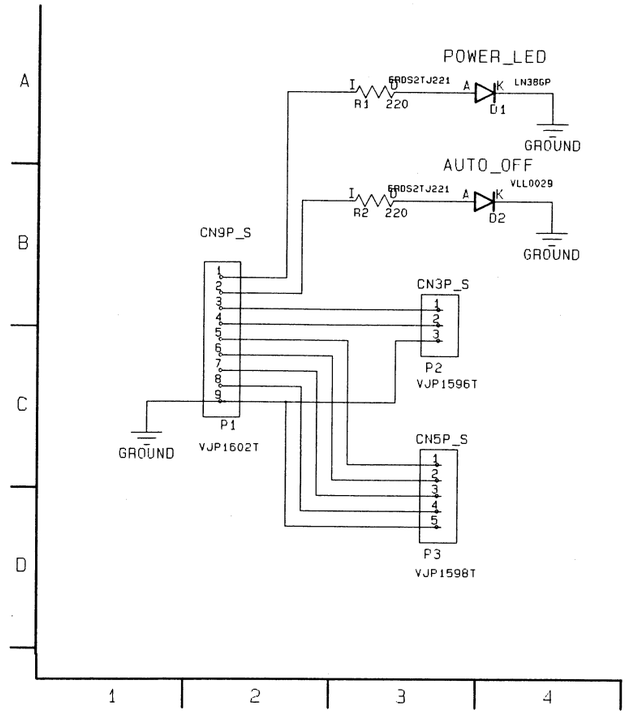

HEAD CONNECTION SCHEMATIC DIAGRAM

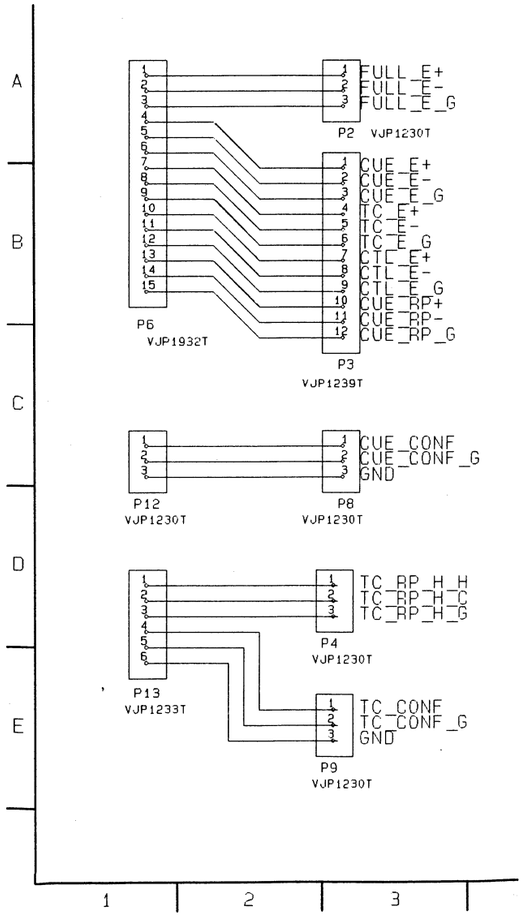

EJECT SCHEMATIC DIAGRAM

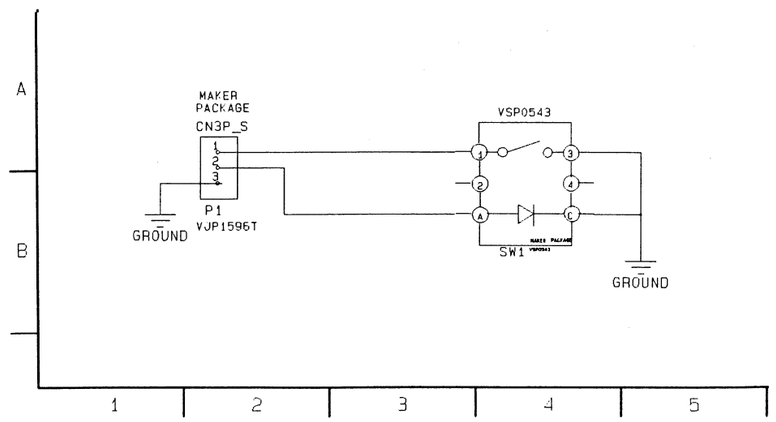

POWER 1 SCHEMATIC DIAGRAM

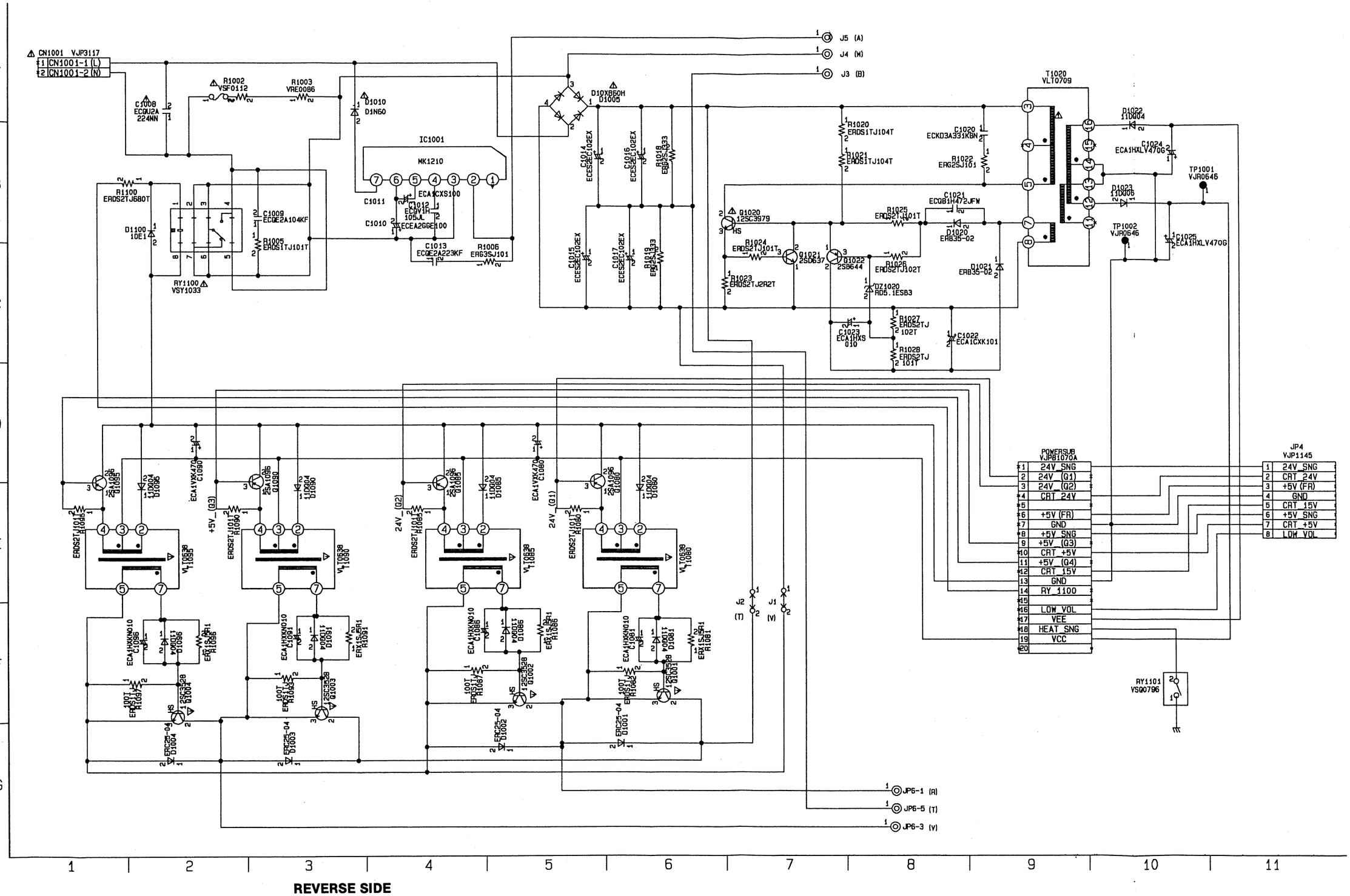

REVERSE SIDE

MECHANISM INTERFACE/EM EJECT/ HEAD CONNECTION/AUTO OFF/ERR LED EJECT

POWER SU

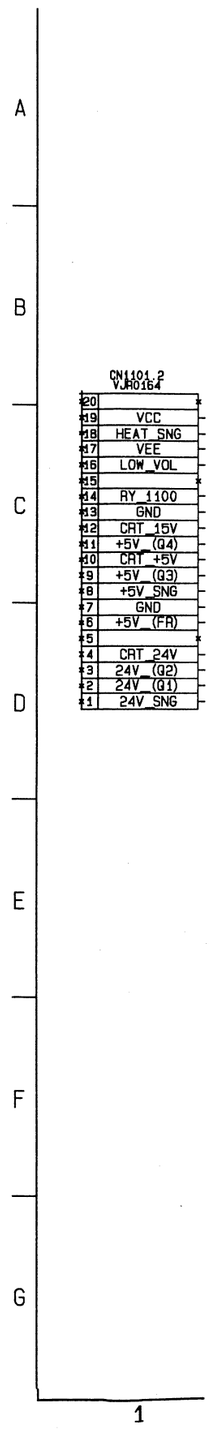

POWER SUB 1 SCHEMATIC DIAGRAM

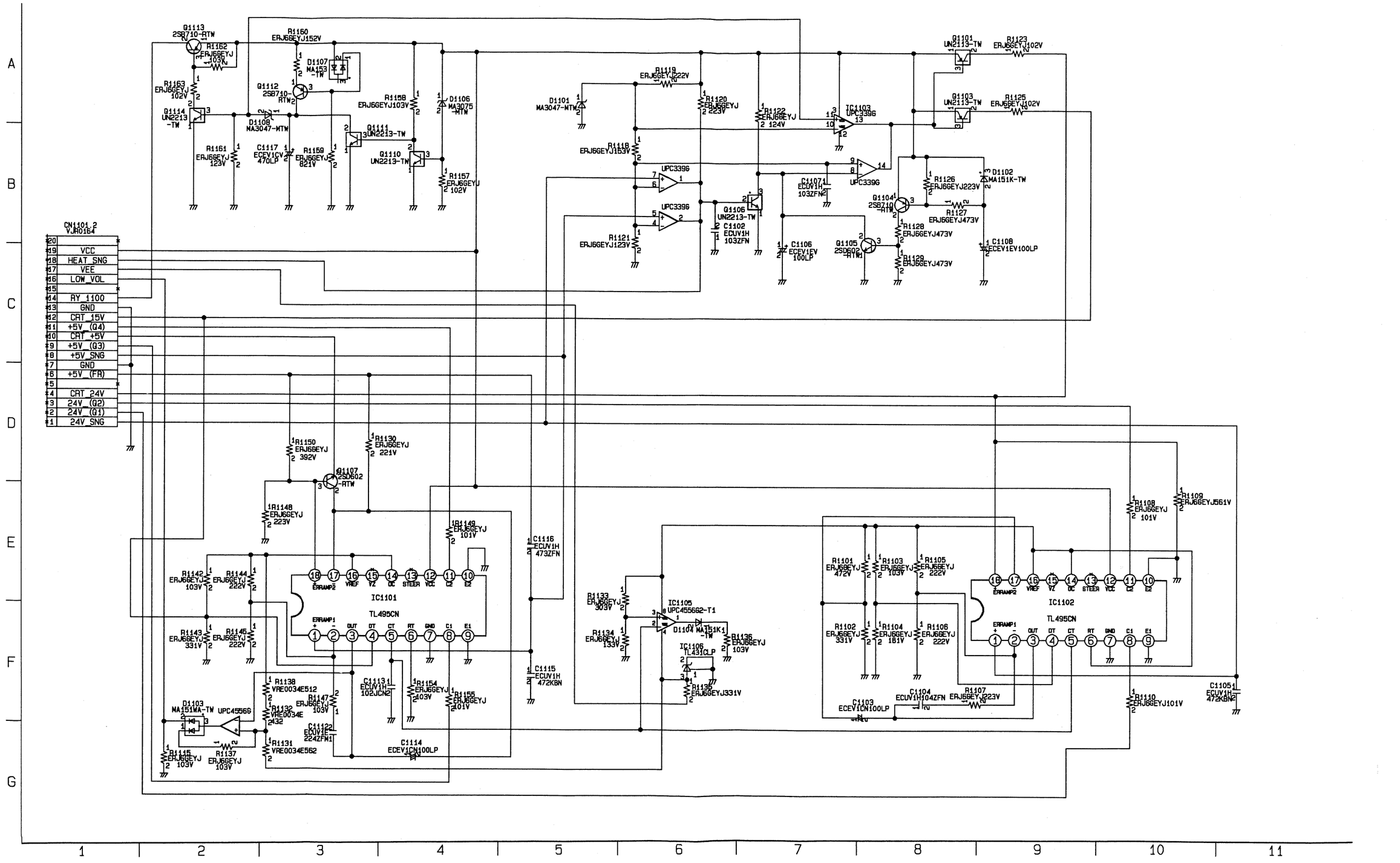

POWER 2 SCHEMATIC DIAGRAM

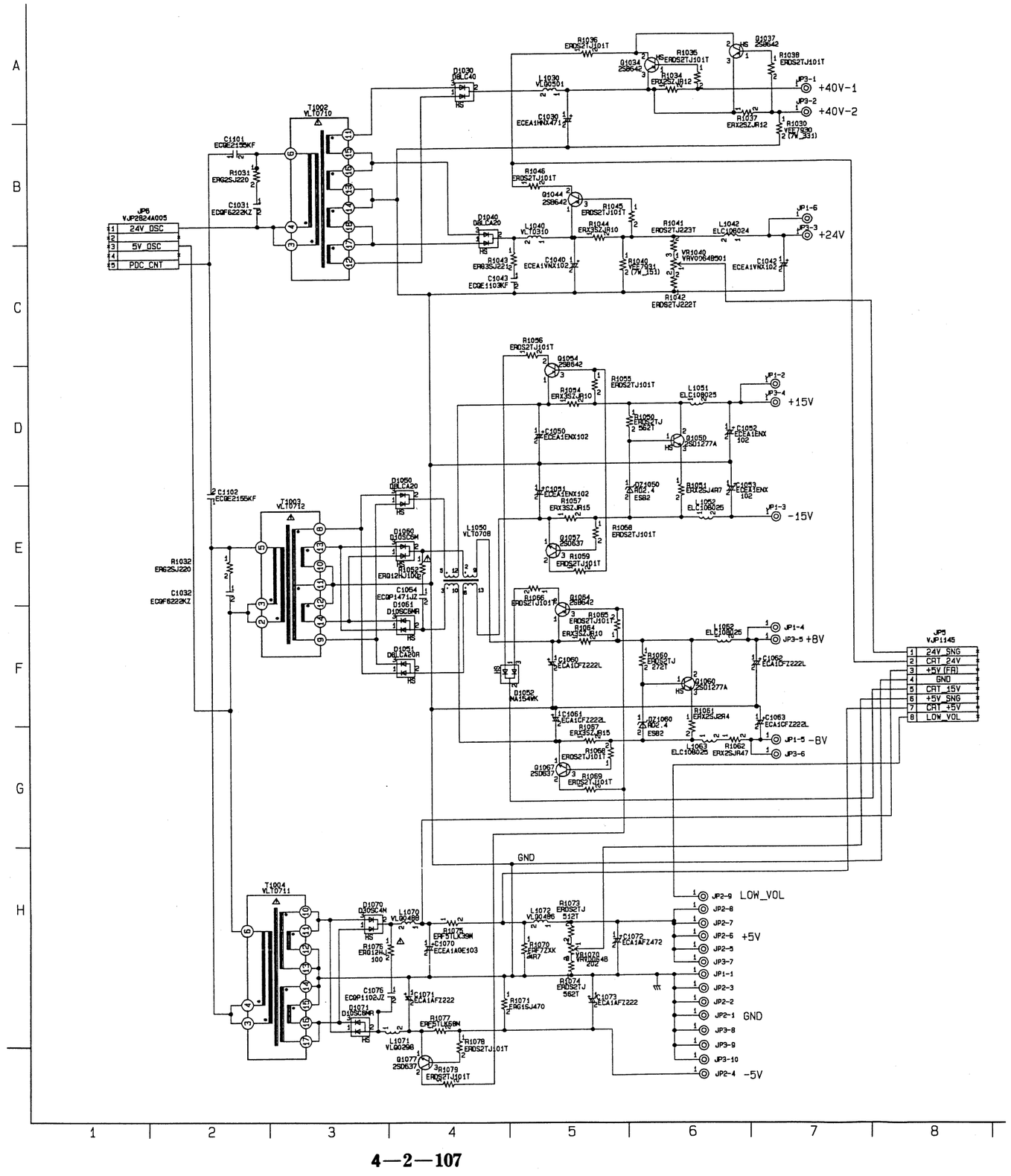

POWER 3 SCHEMATIC DIAGRAM

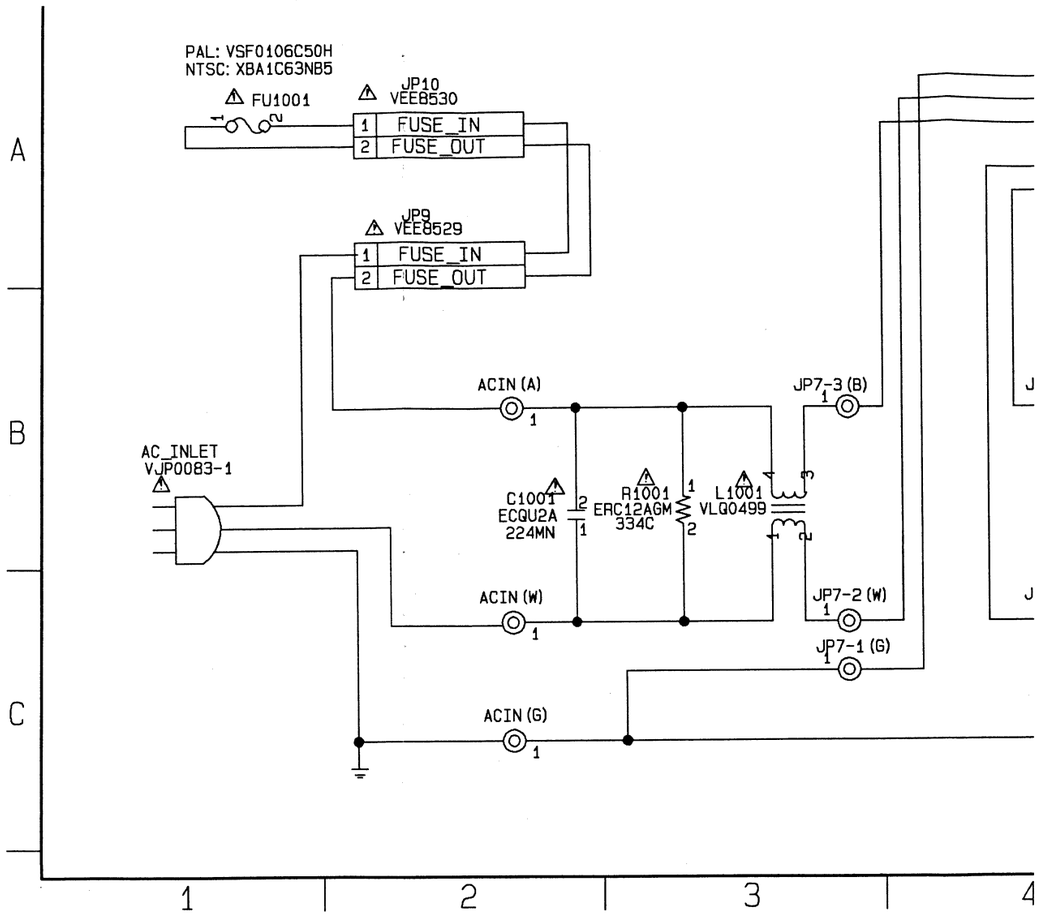

POWER 1 SUB 2 SCHEMATIC DIAGRAM

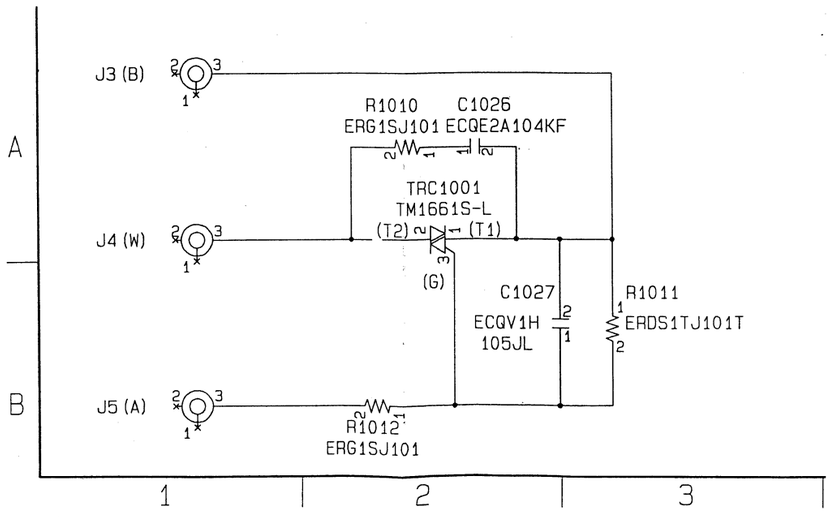

POWER 3 SCHEMATIC DIAGRAM

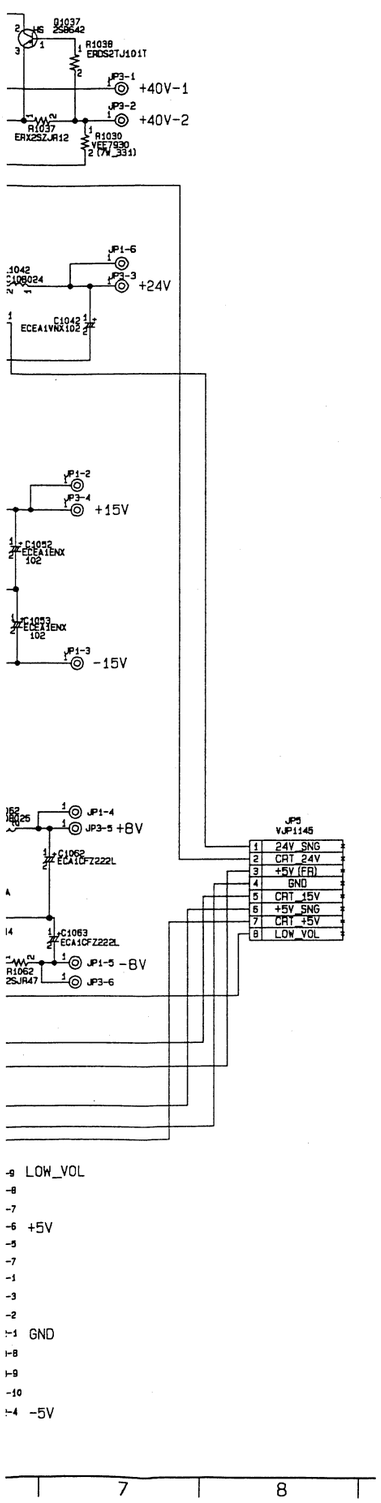

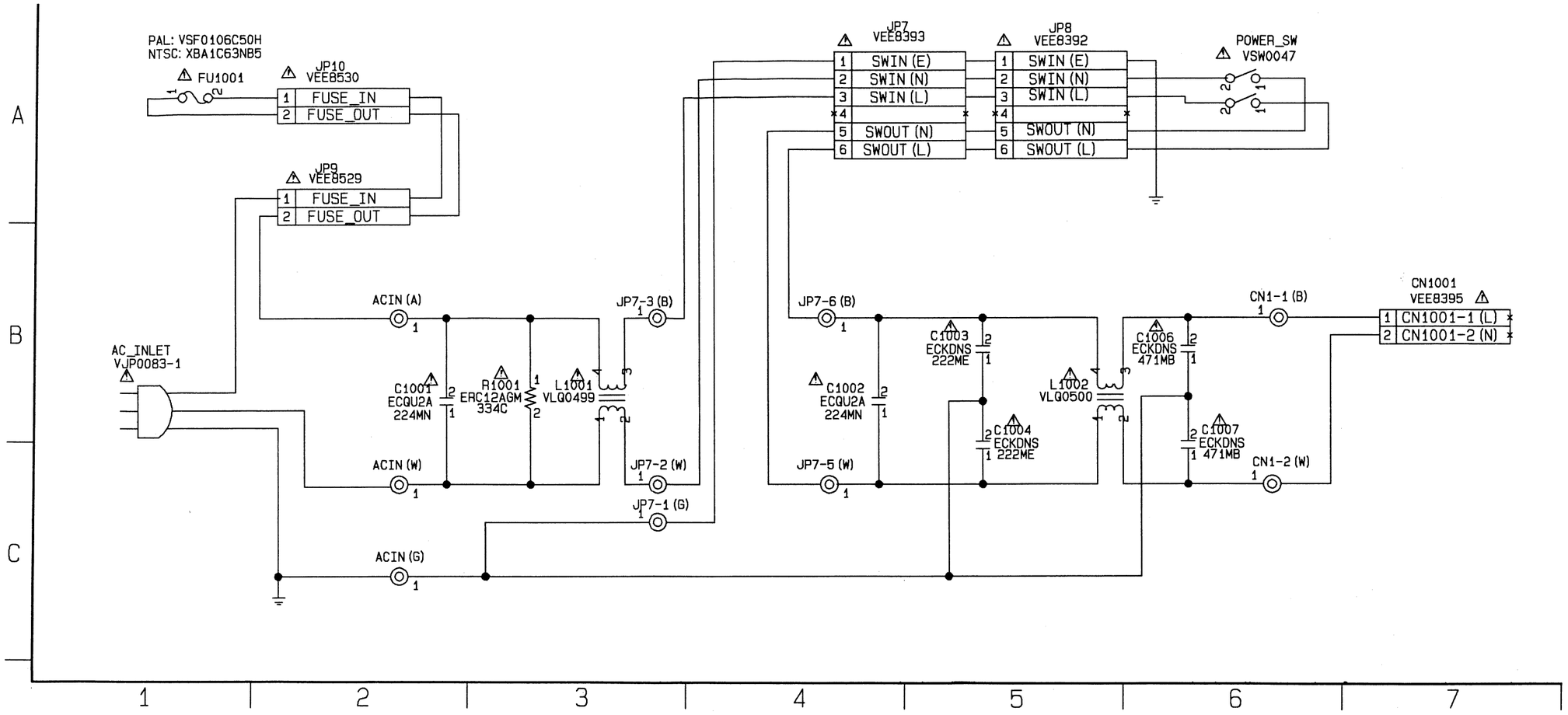

POWER 1 SUB 2 SCHEMATIC DIAGRAM

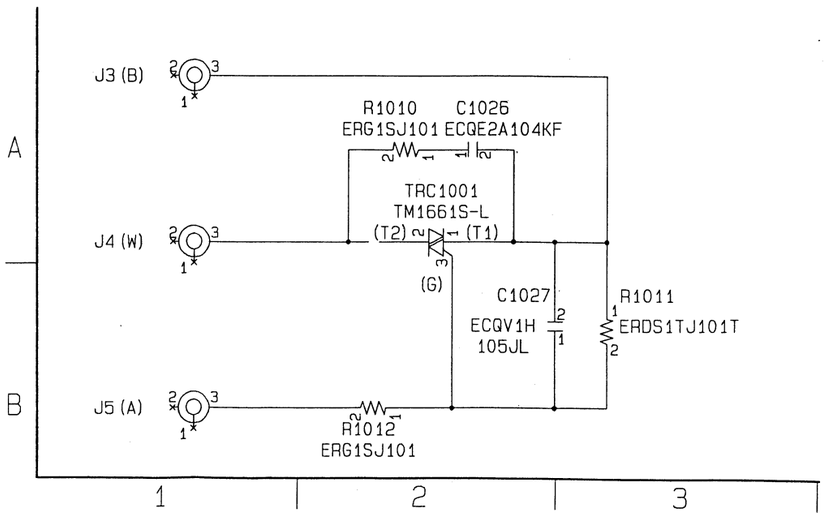

REVERSE SIDE

FR VR SCHEMATIC DIAGRAM

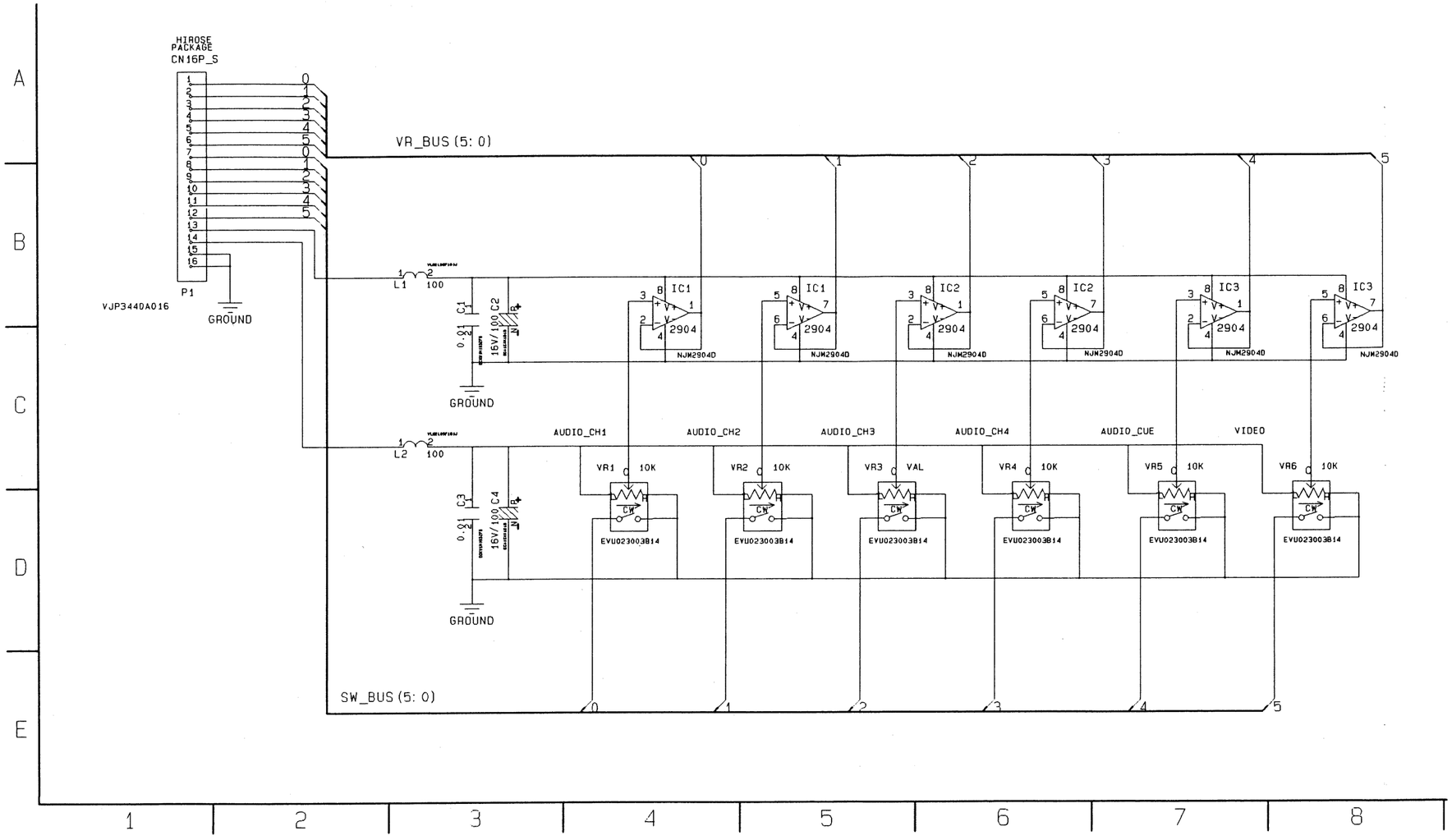

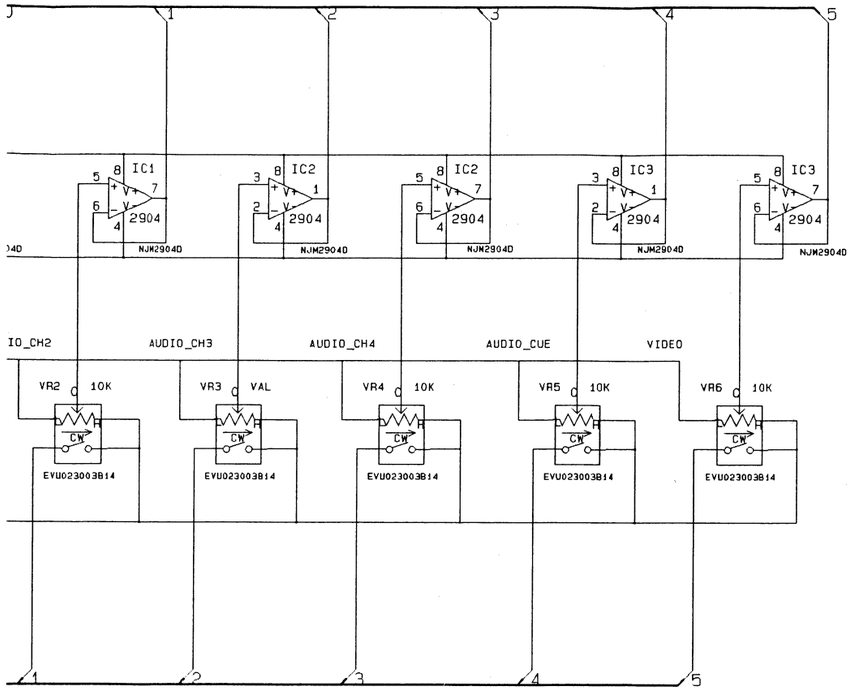

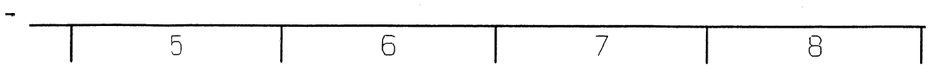

HEADPHONE VR SCHEMATIC DIAGRAM

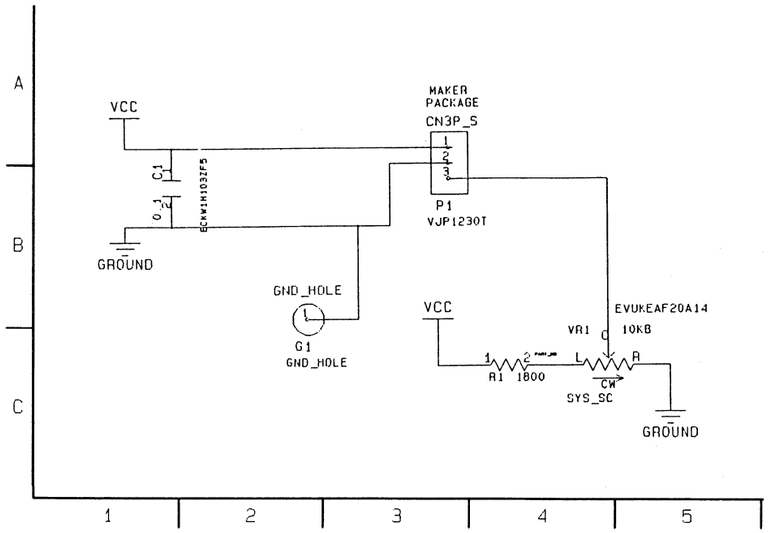

HEADPHONE JACK SCHEMATIC DIAGRAM

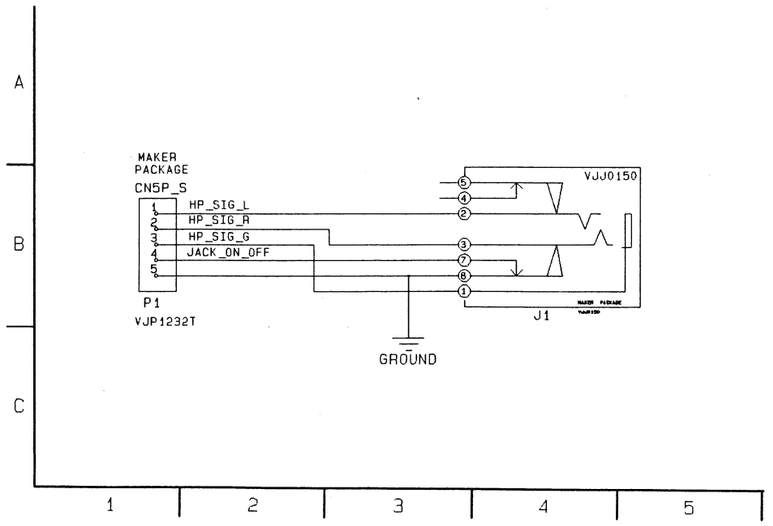

FR LED SCHEMATIC DIAGRAM

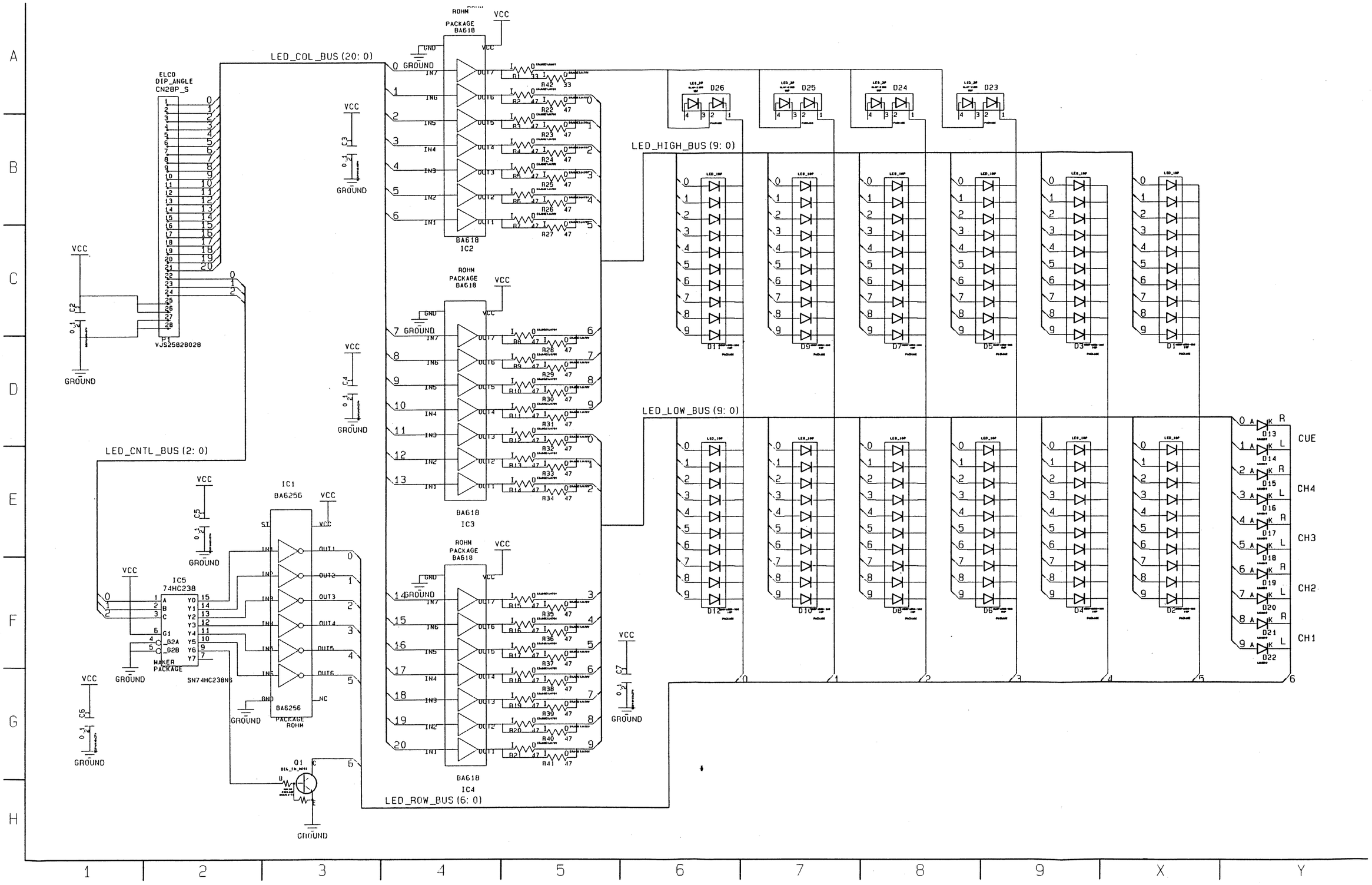

FR CPU SUB SCHEMATIC DIAGRAM

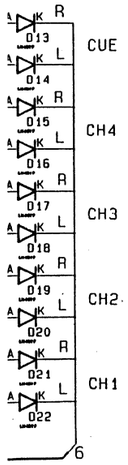

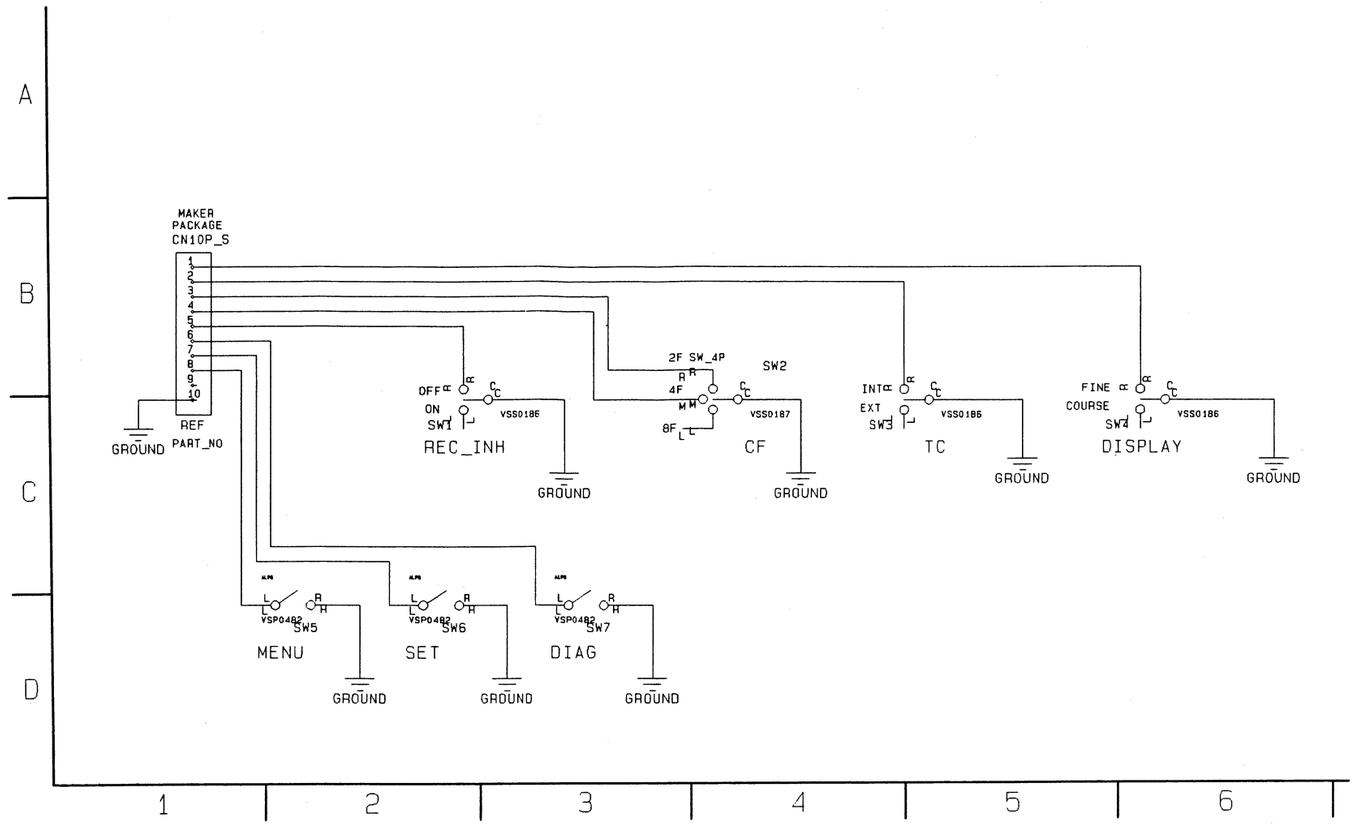

Y

FR CPU (1/6) CPU SCHEMATIC DIAGRAM

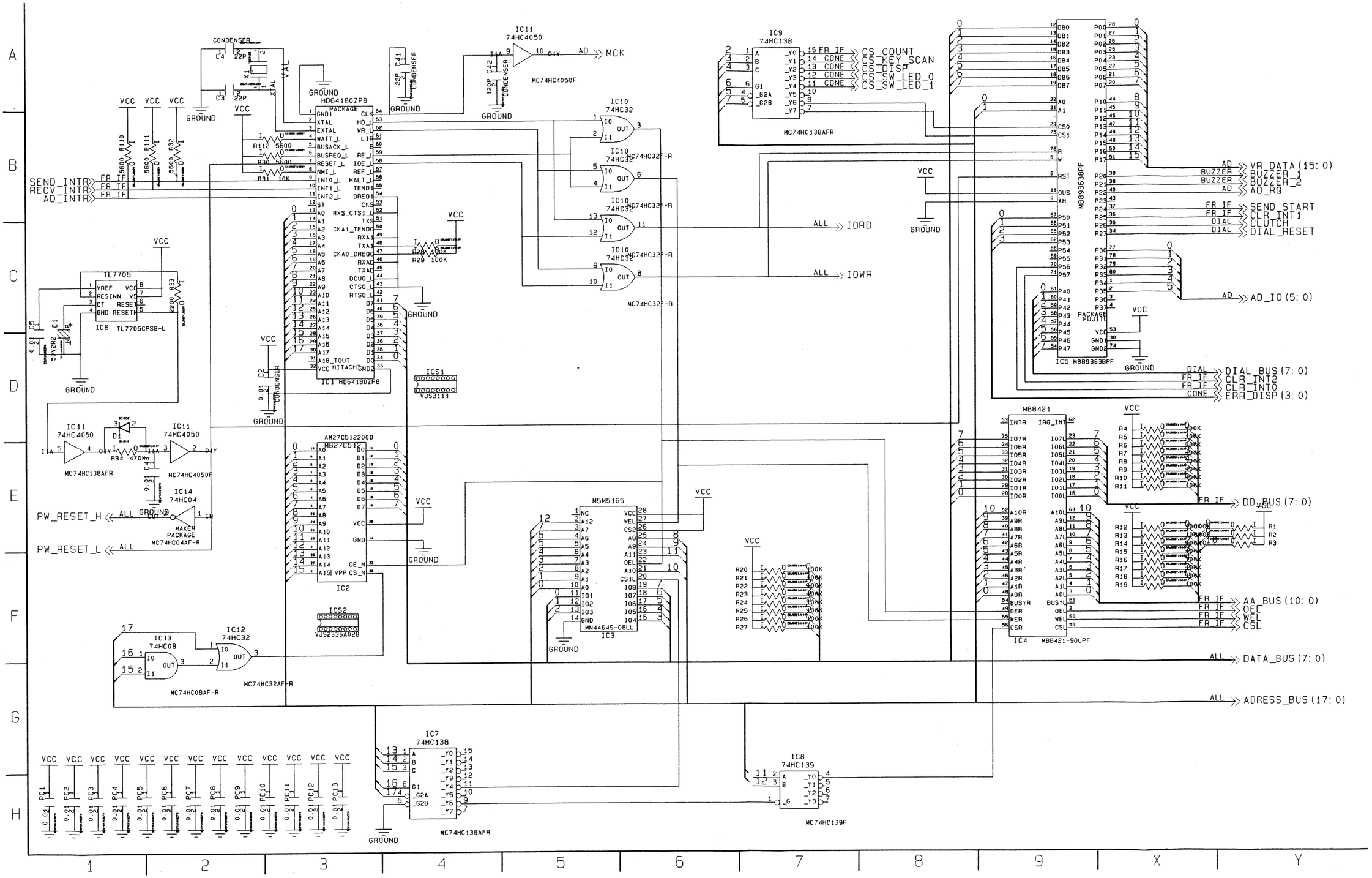

FR CPU (2/6)

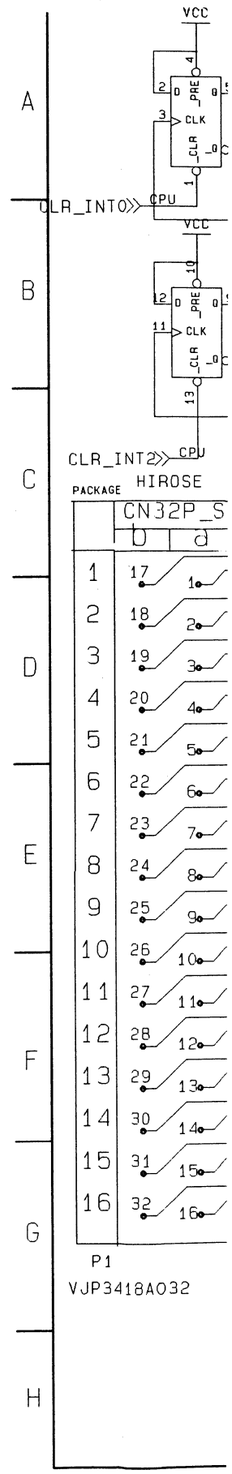

REVERSE SIDE

FR LED/FR CPU SUB

FR CPU (2/6) FR IF SCHEMATIC DIAGRAM

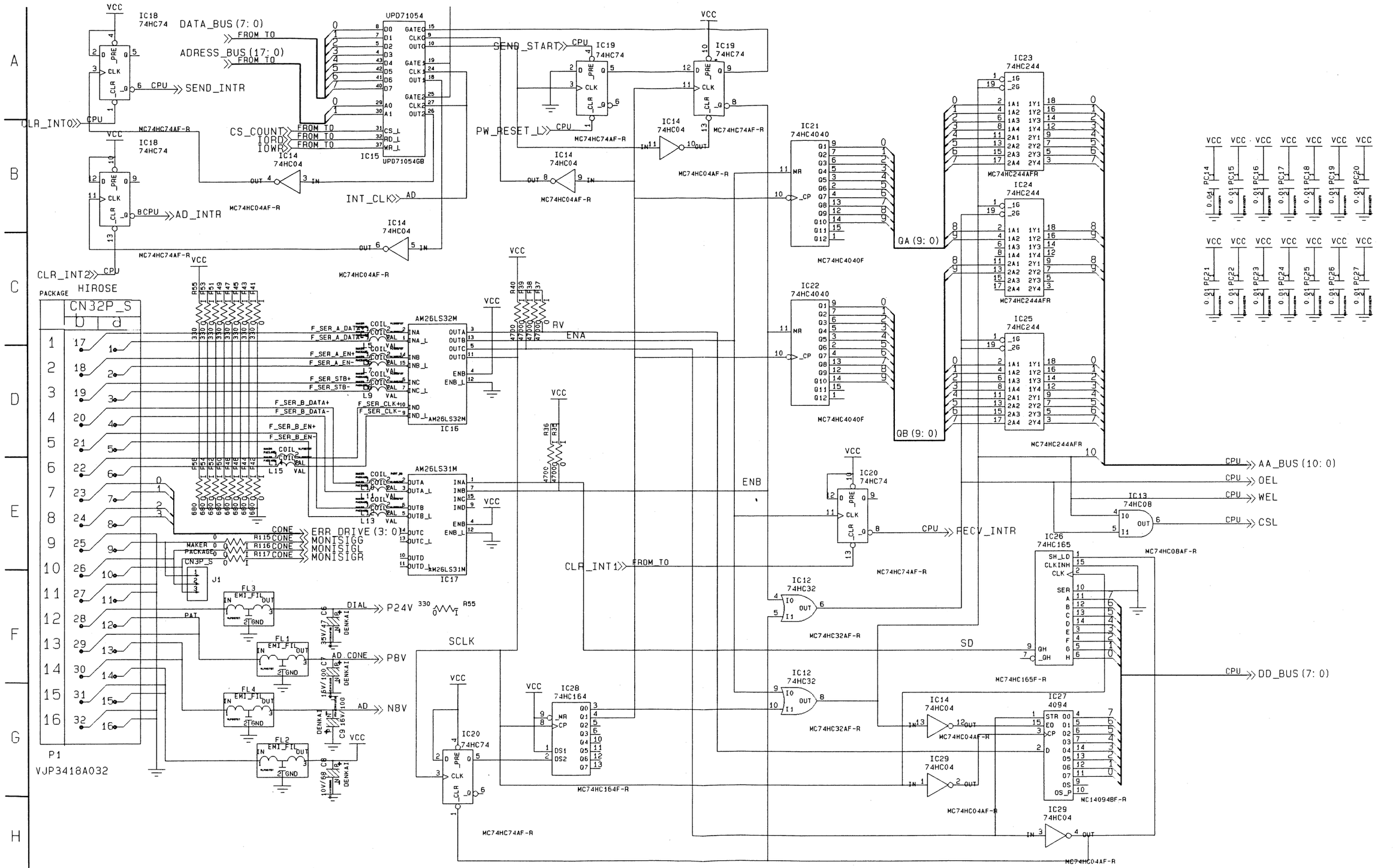

FR CPU (3/6) BUZZER SCHEMATIC DIAGRAM

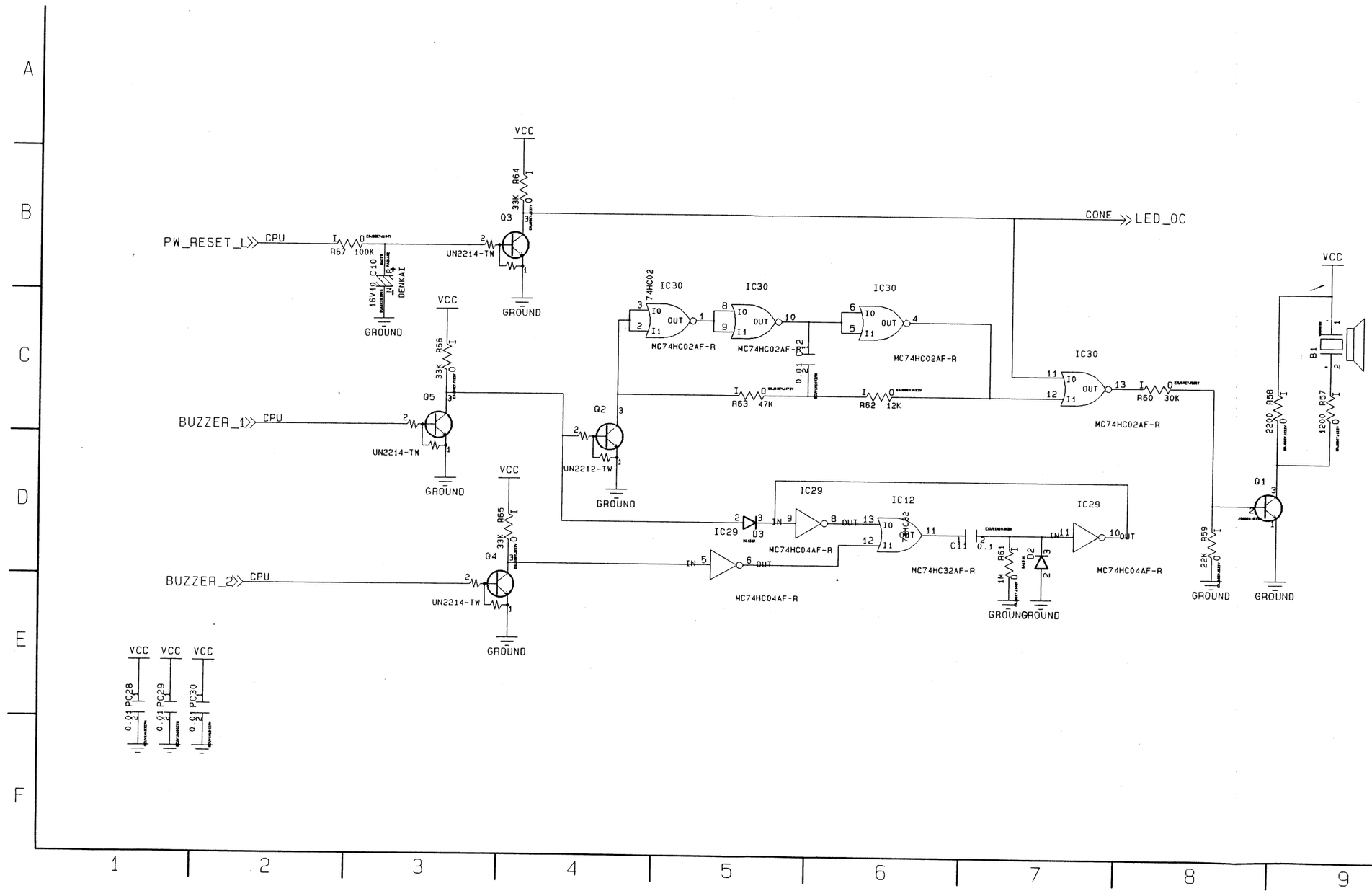

FR CPU (4/6) DIAL SCHEMATIC DIAGRAM

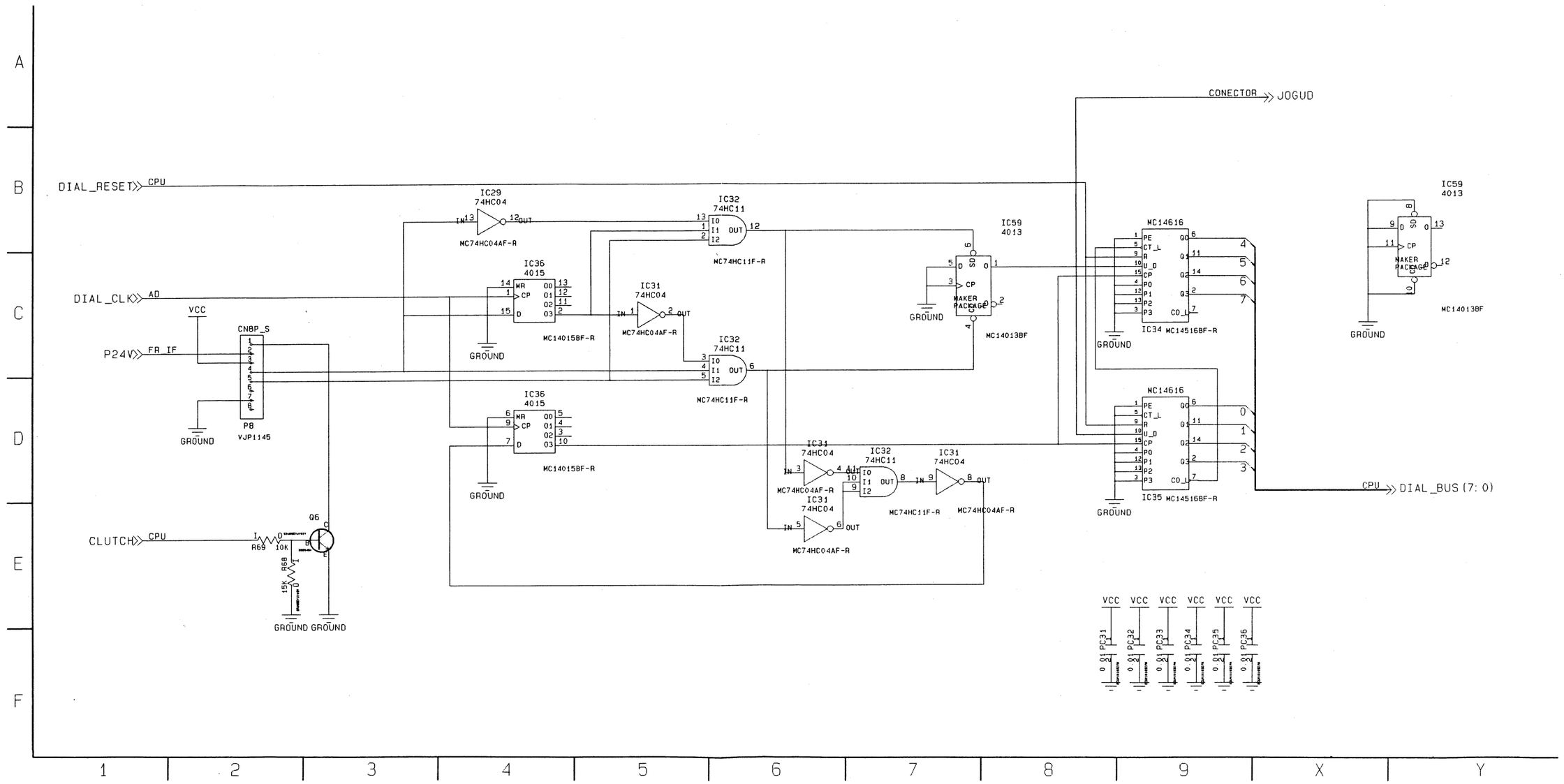

FR CPU (5/6) AD SCHEMATIC DIAGRAM

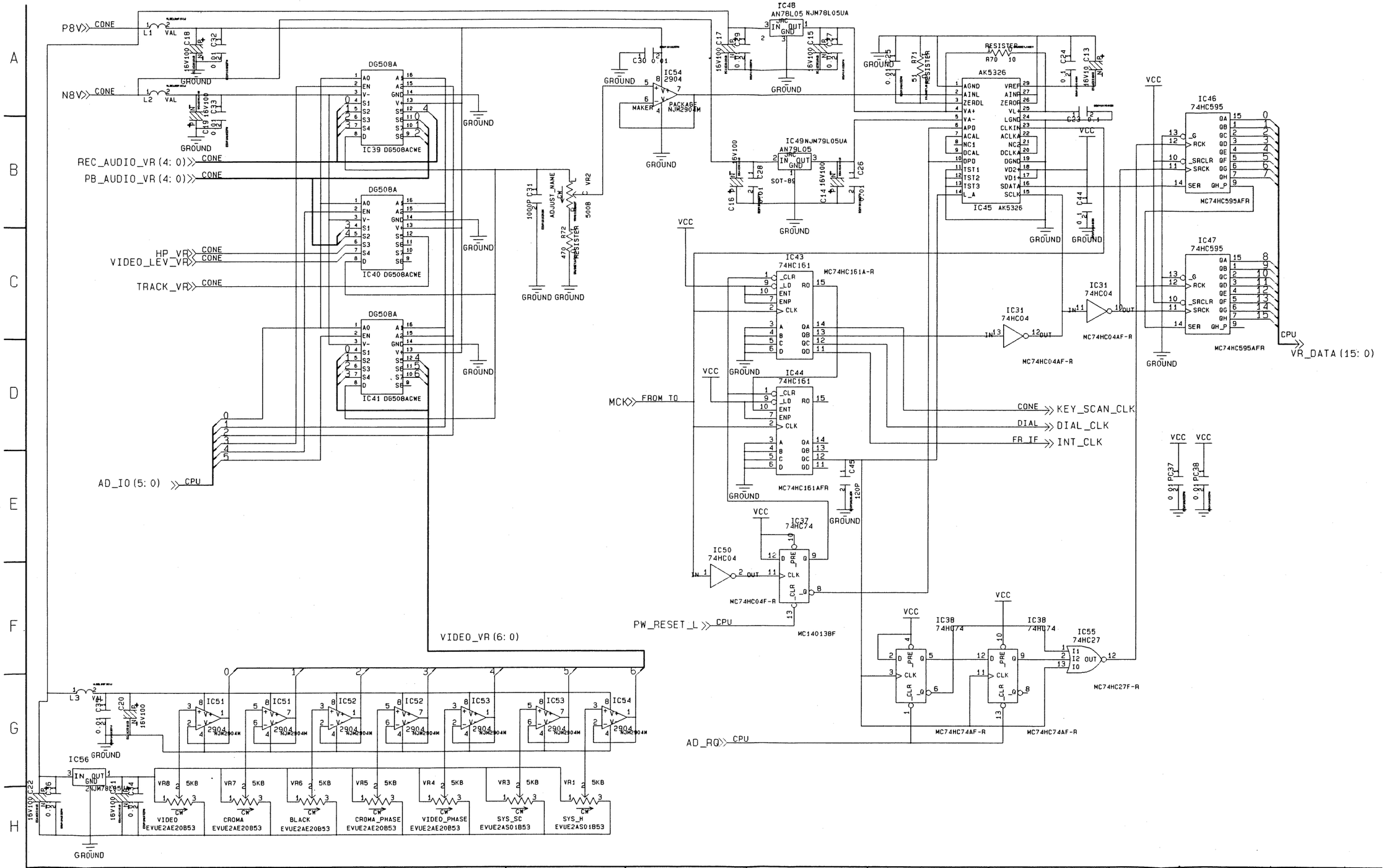

FR CPU (6/6

FR CPU (6/6) CONNECTOR SCHEMATIC DIAGRAM

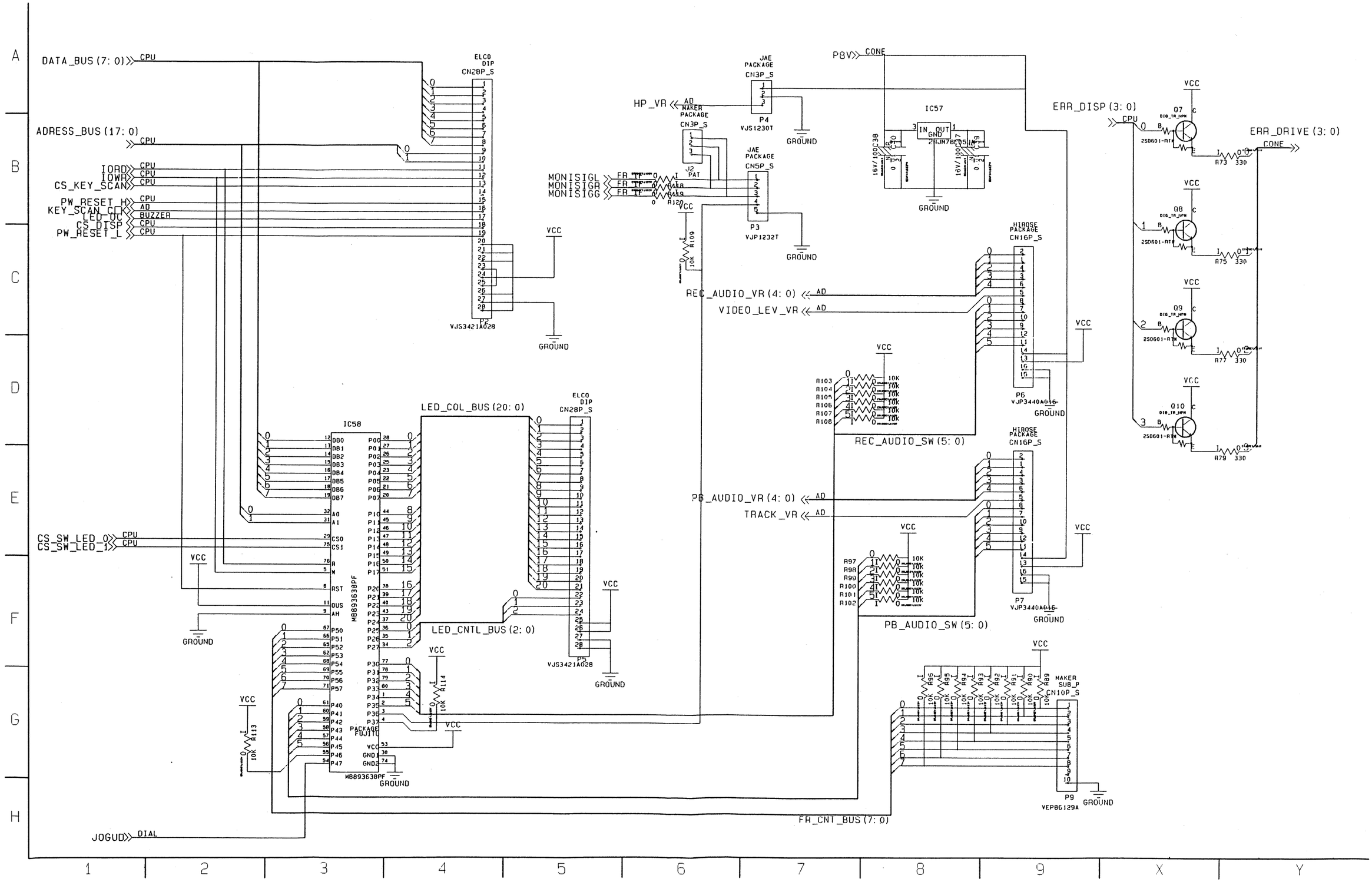

FR SW (1/3) SW SCHEMATIC DIAGRAM

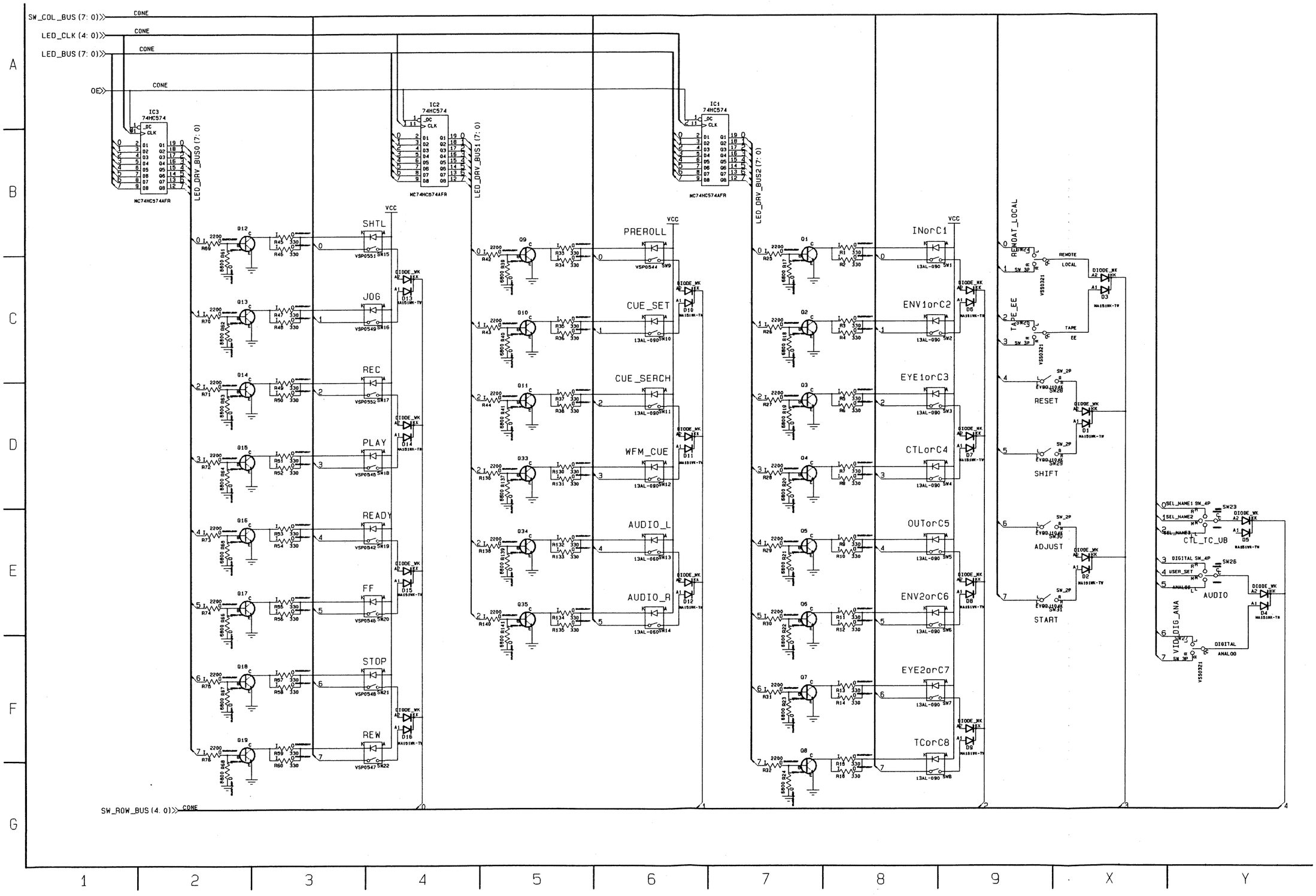

FR SW (2/3) CONNECTOR SCHEMATIC DIAGRAM

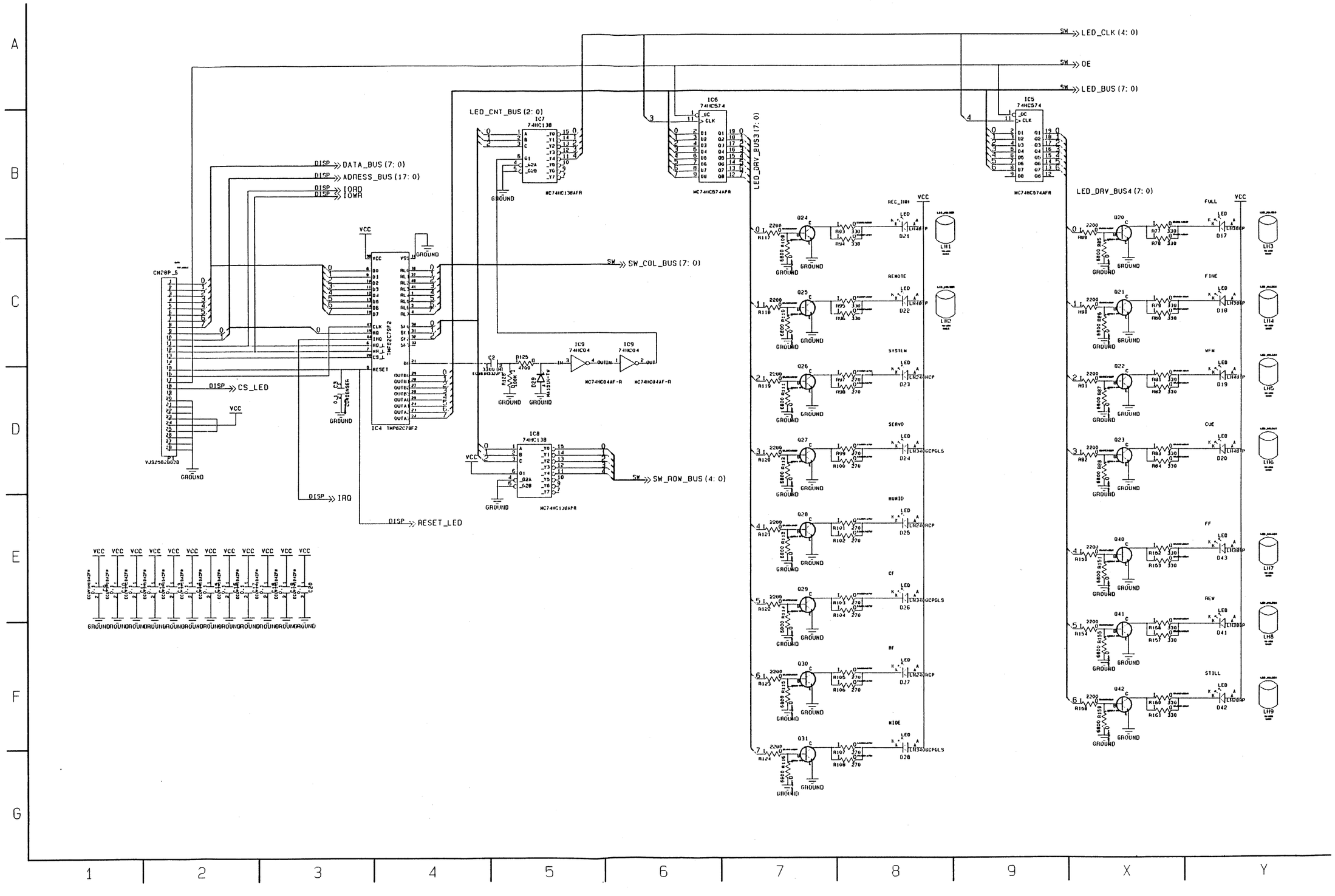

FR SW (3/3) DISPLAY SCHEMATIC DIAGRAM

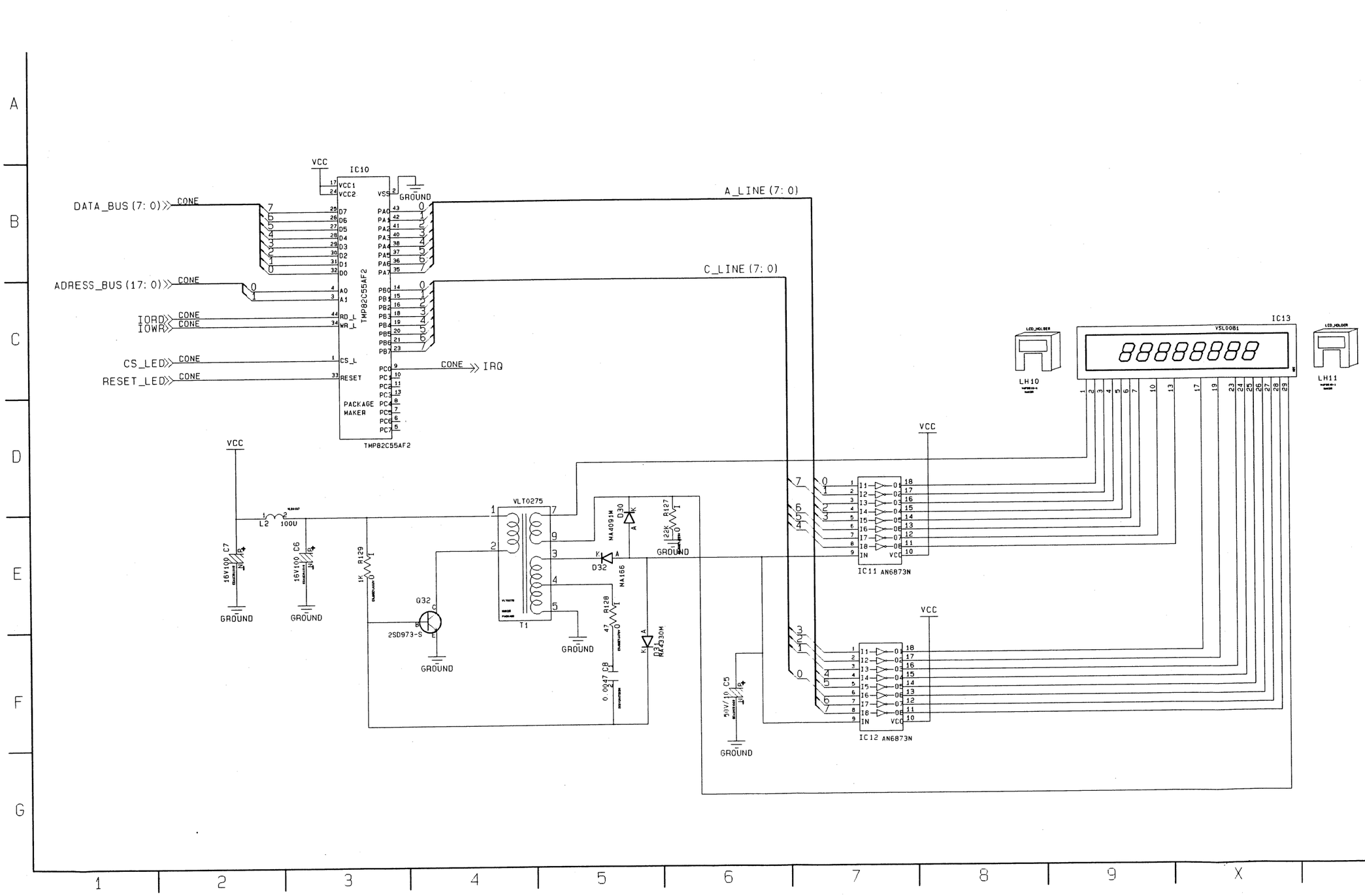

VIDEO JACK

FRAME_GND

REVERSE SIDE

FR SW (1/3, 2/3)

VIDEO JACK (1/3) SCHEMATIC DIAGRAM

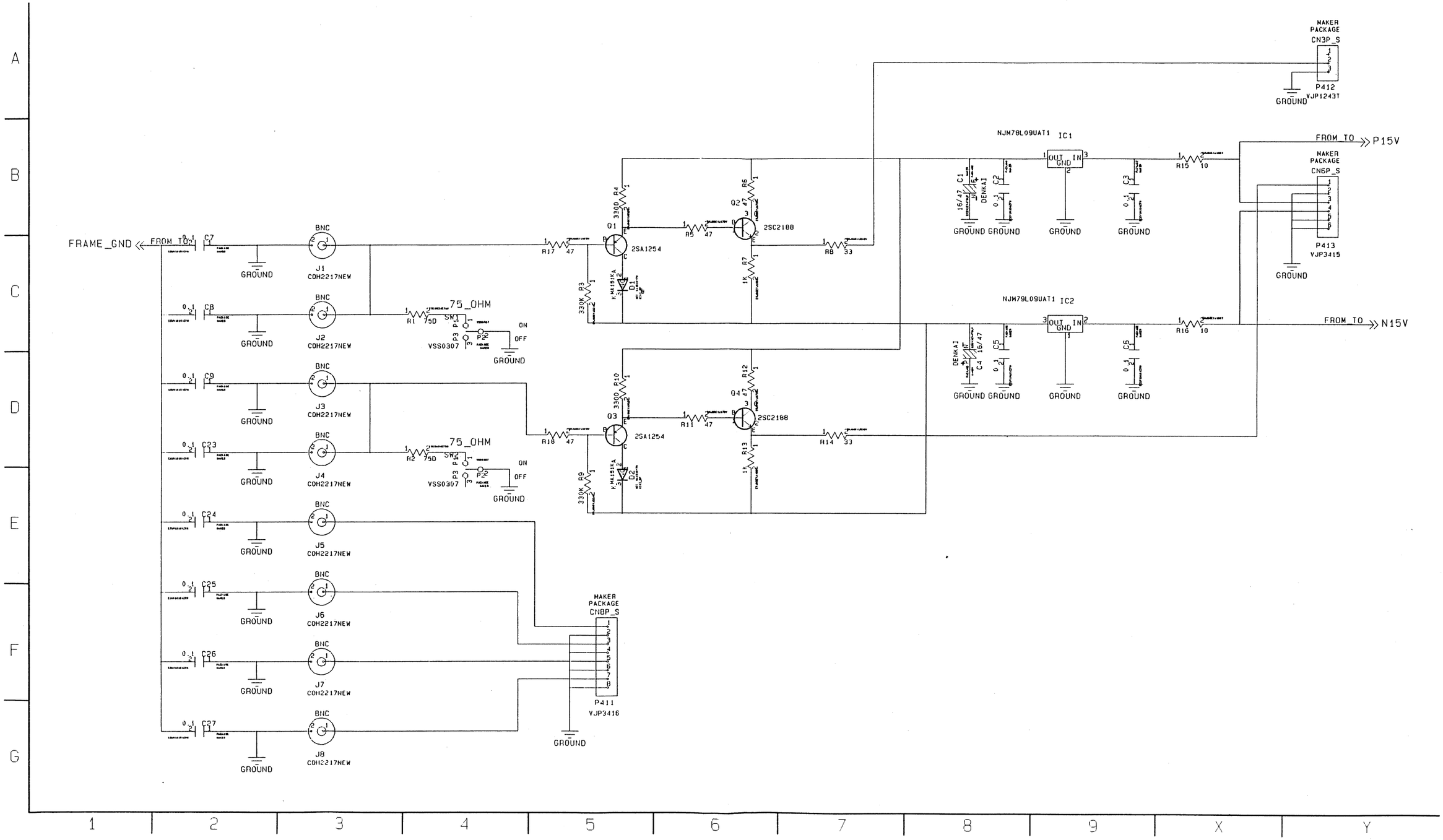

VIDEO JACK (2/3) SCHEMATIC DIAGRAM

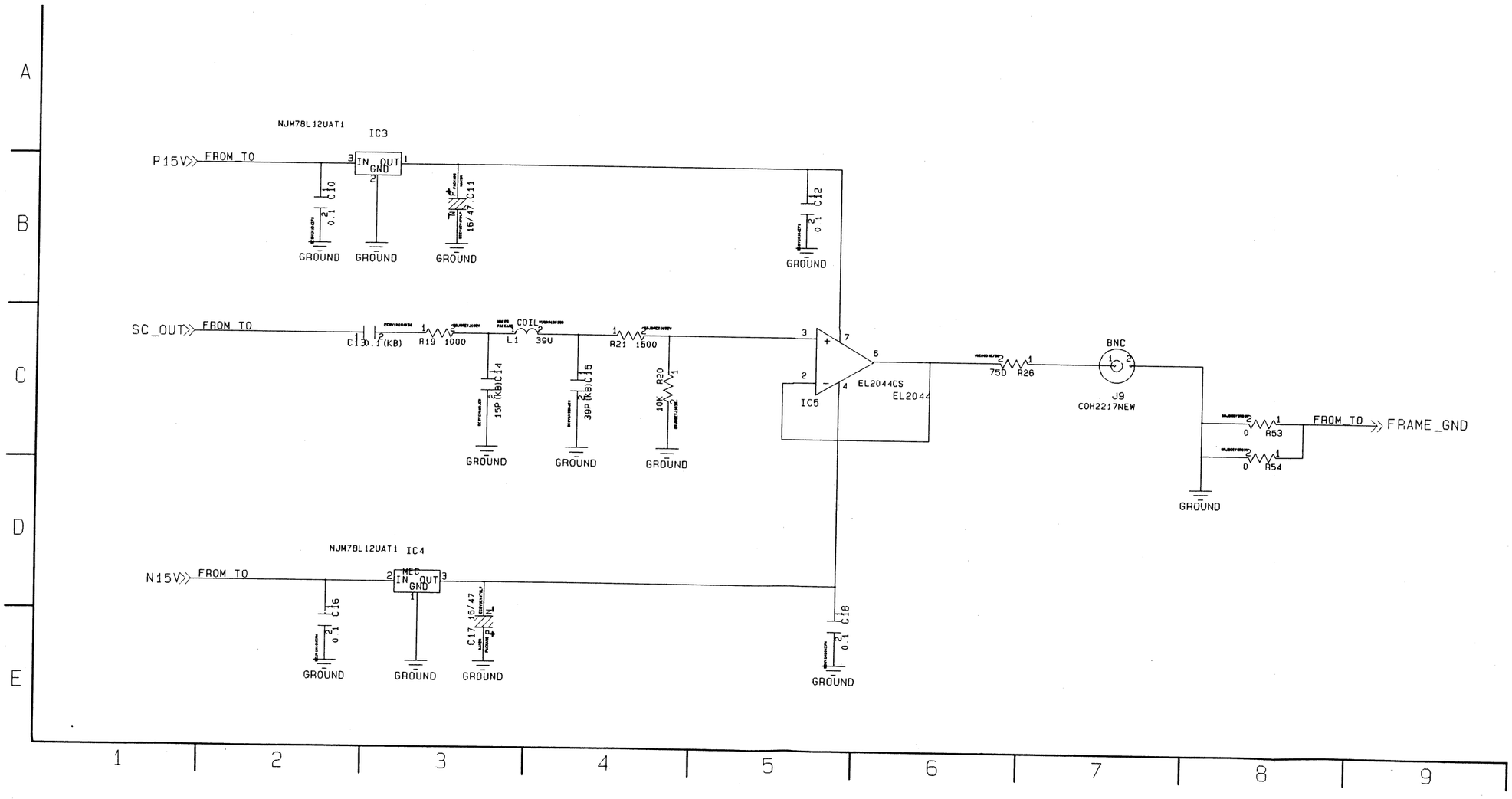

VIDEO JACK (3/3) SCHEMATIC DIAGRAM

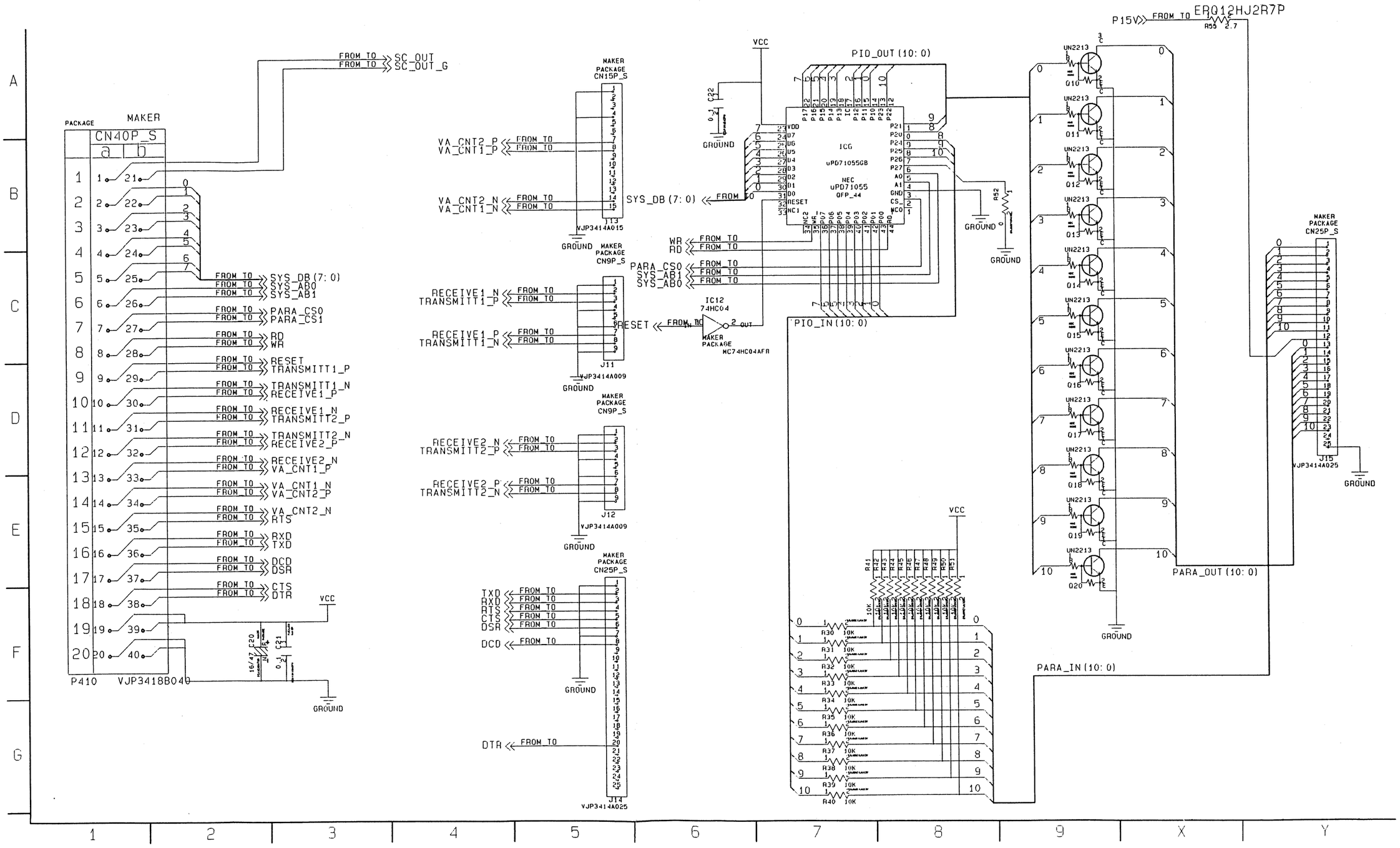

AUDIO JACK SCHEMATIC DIAGRAM

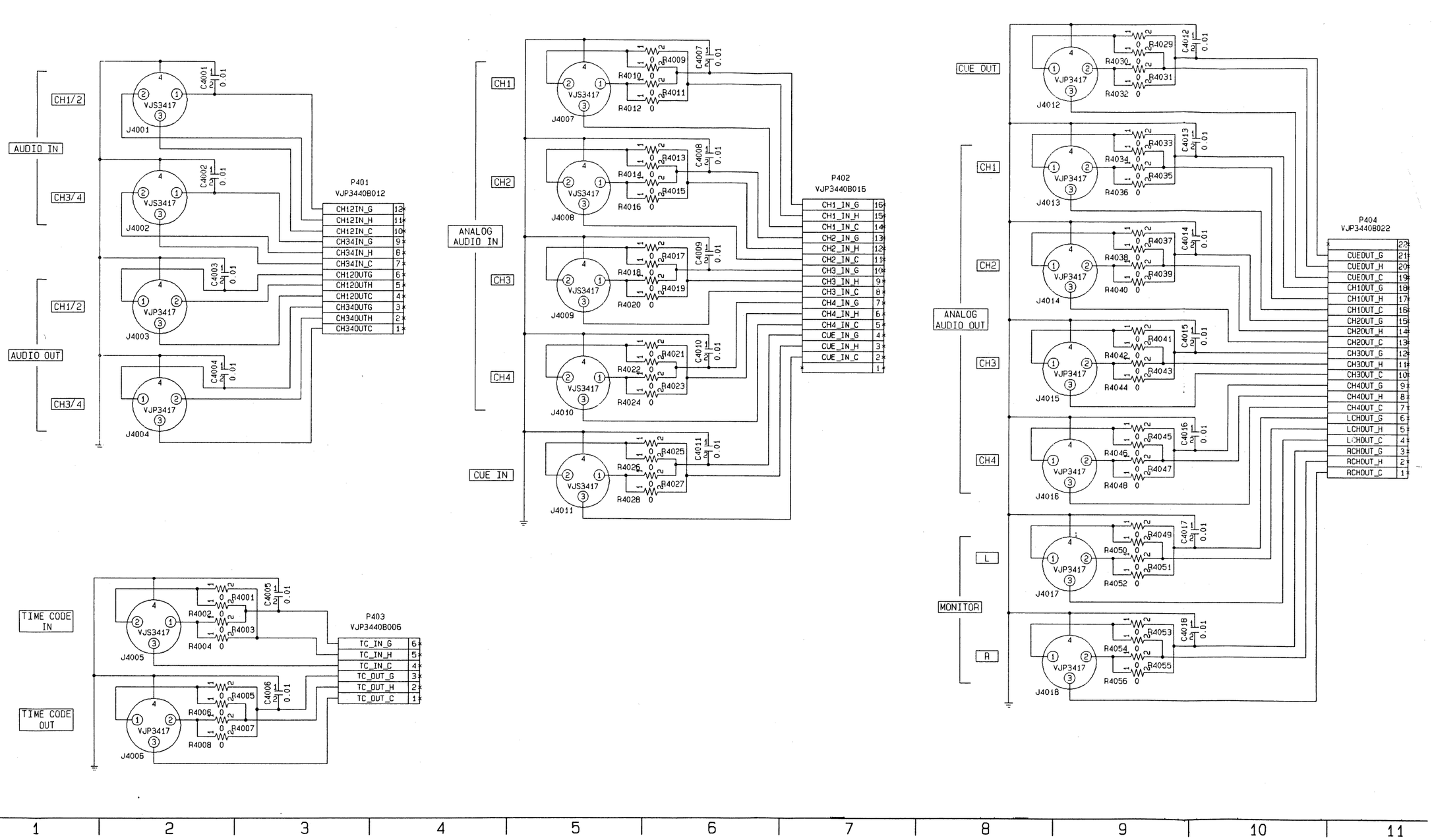

REVERSE SIDE

VIDEO JACK (2/3, 3/3)

CIRCUIT BOARD LOCATION

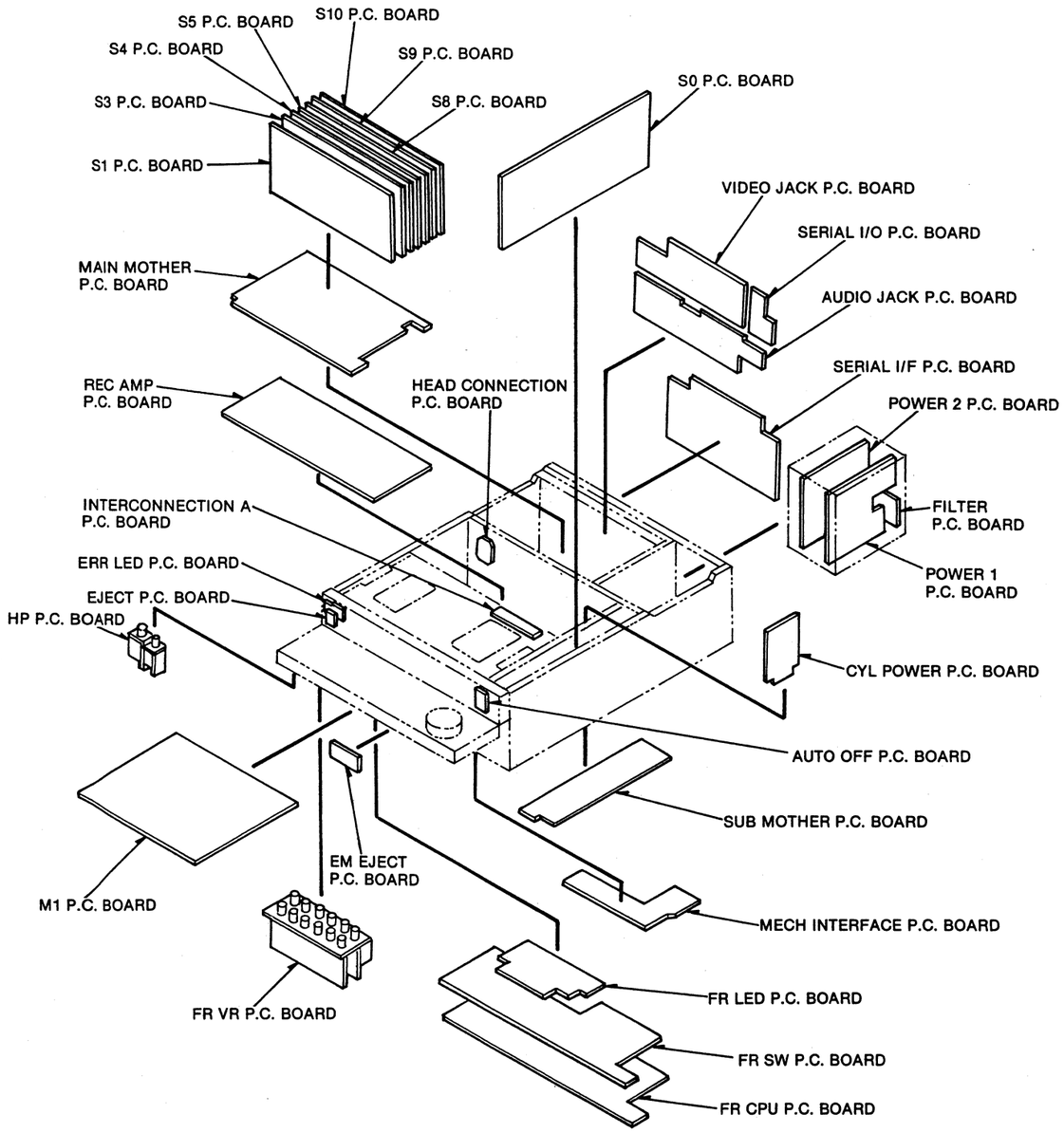

AV DSP SUB 1 (M SUB 1)/AV REC P.C. BOARD (VEP88096A) (FOR N
(VEP88096B) (FOR P

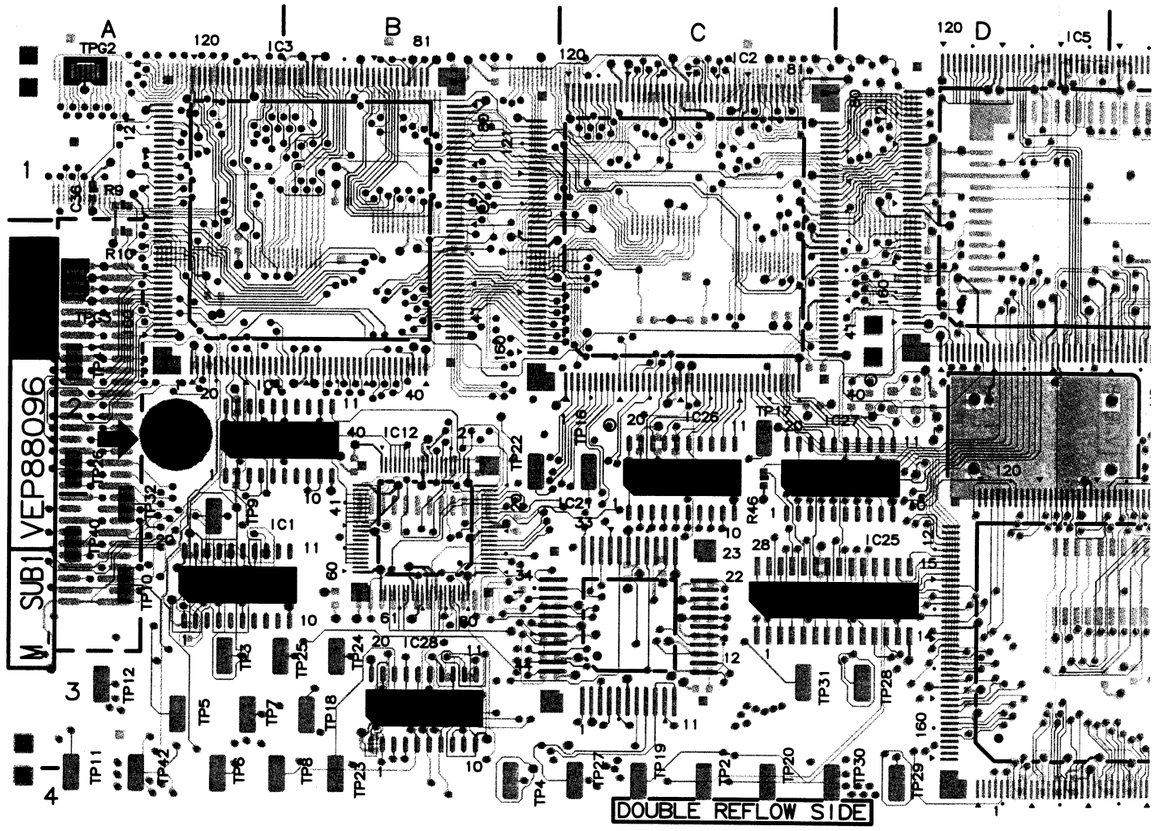

VEP88096A) (FOR NTSC)
VEP88096B) (FOR PAL)

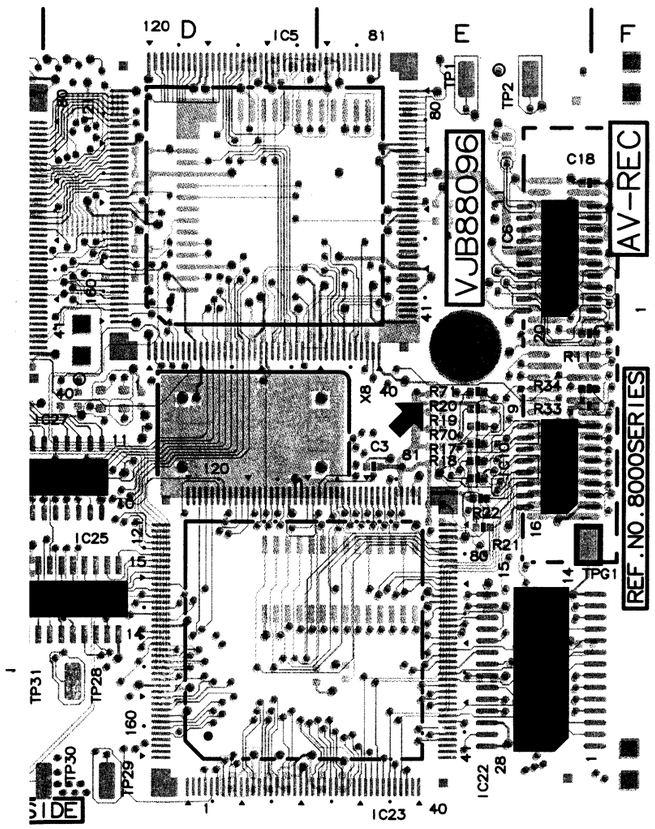

COMPONENT SIDE

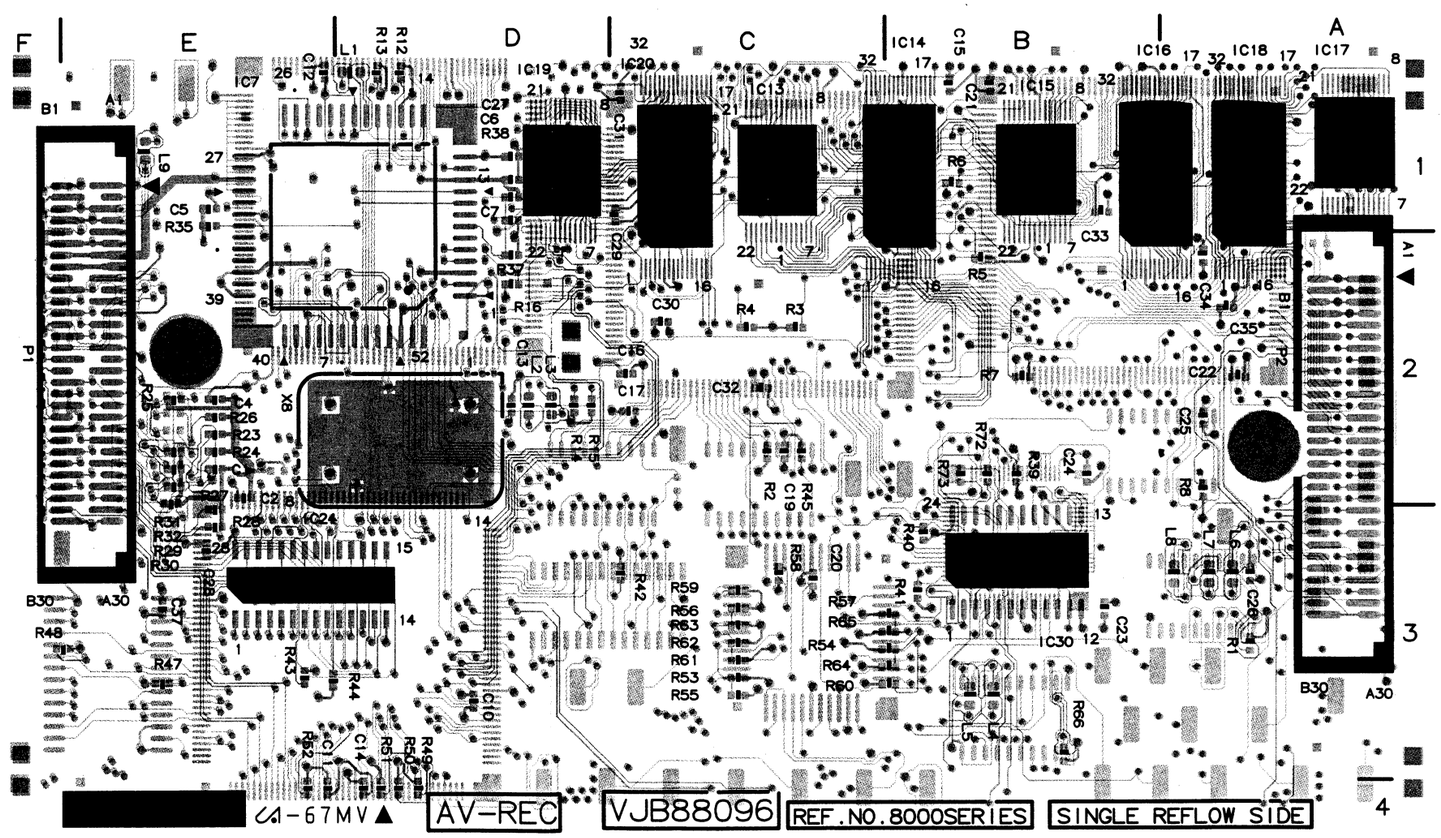

FOIL SIDE

AV DSP (M SUB1)		
Integrated Circuits		
IC8001	A-3	©
IC8002	C-1	©
IC8003	B-1	©
IC8004	A-2	©
IC8005	D-1	©
IC8006	E-2	©
IC8007	E-1	Ⓕ
IC8010	E-2	©
IC8012	B-2	©
IC8013	C-1	Ⓕ
IC8014	B-1	Ⓕ
IC8015	B-1	Ⓕ
IC8016	B-1	Ⓕ
IC8017	A-1	Ⓕ
IC8018	A-1	Ⓕ
IC8019	D-1	Ⓕ
IC8020	C-1	Ⓕ
IC8021	C-3	©
IC8022	E-3	©
IC8023	E-3	©
IC8024	E-3	Ⓕ
IC8025	D-3	©
IC8026	C-2	©
IC8027	D-2	©
IC8028	B-3	©
IC8030	B-3	Ⓕ
Test Points		
TP8001	E-1	©
TP8002	E-1	©
TP8003	A-3	©
TP8004	B-4	©
TP8005	A-3	©
TP8006	A-4	©
TP8007	A-3	©
TP8008	B-4	©
TP8009	A-3	©
TP8010	A-3	©
TP8011	A-4	©
TP8012	A-3	©
TP8016	C-2	©
TP8017	C-2	©
TP8018	B-3	©
TP8019	C-4	©
TP8020	C-4	©
TP8021	C-4	©
TP8022	B-2	©
TP8023	B-4	©
TP8024	B-3	©
TP8025	B-3	©
TP8026	A-2	©
TP8027	C-4	©
TP8028	A-2	©
TP8029	D-4	©
TP8030	D-3	©
TP8031	C-3	©
TP8032	A-3	©
TP8040	A-3	©
TP8041	A-2	©
TP8042	A-4	©
TPG8001	F-3	©
TPG8002	A-1	©
TPG8003	A-2	©
Connectors		
P8002	F-2	Ⓕ

ADDRESS INFORMATION
©... COMPONENT SIDE
Ⓕ... FOIL SIDE

AV DSP (M) P.C. BOARD (VEP88095A) (FOR NTSC) (VEP88095B) (FOR PAL)

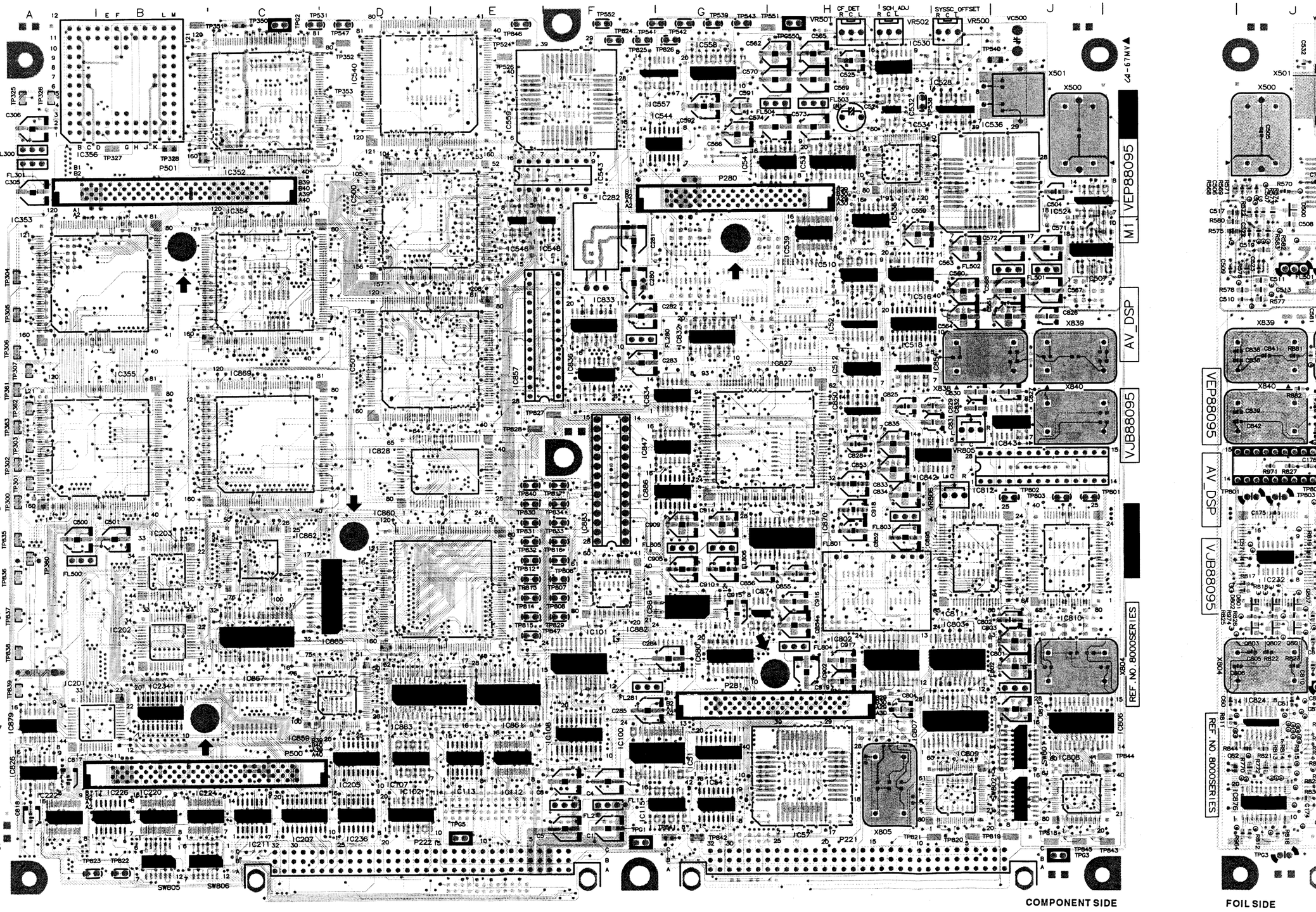

REVERSE SIDE

AV DSP SUB 1

REF.NO.8000SERIES | VJB88095 | AV_DSP | VEP88095

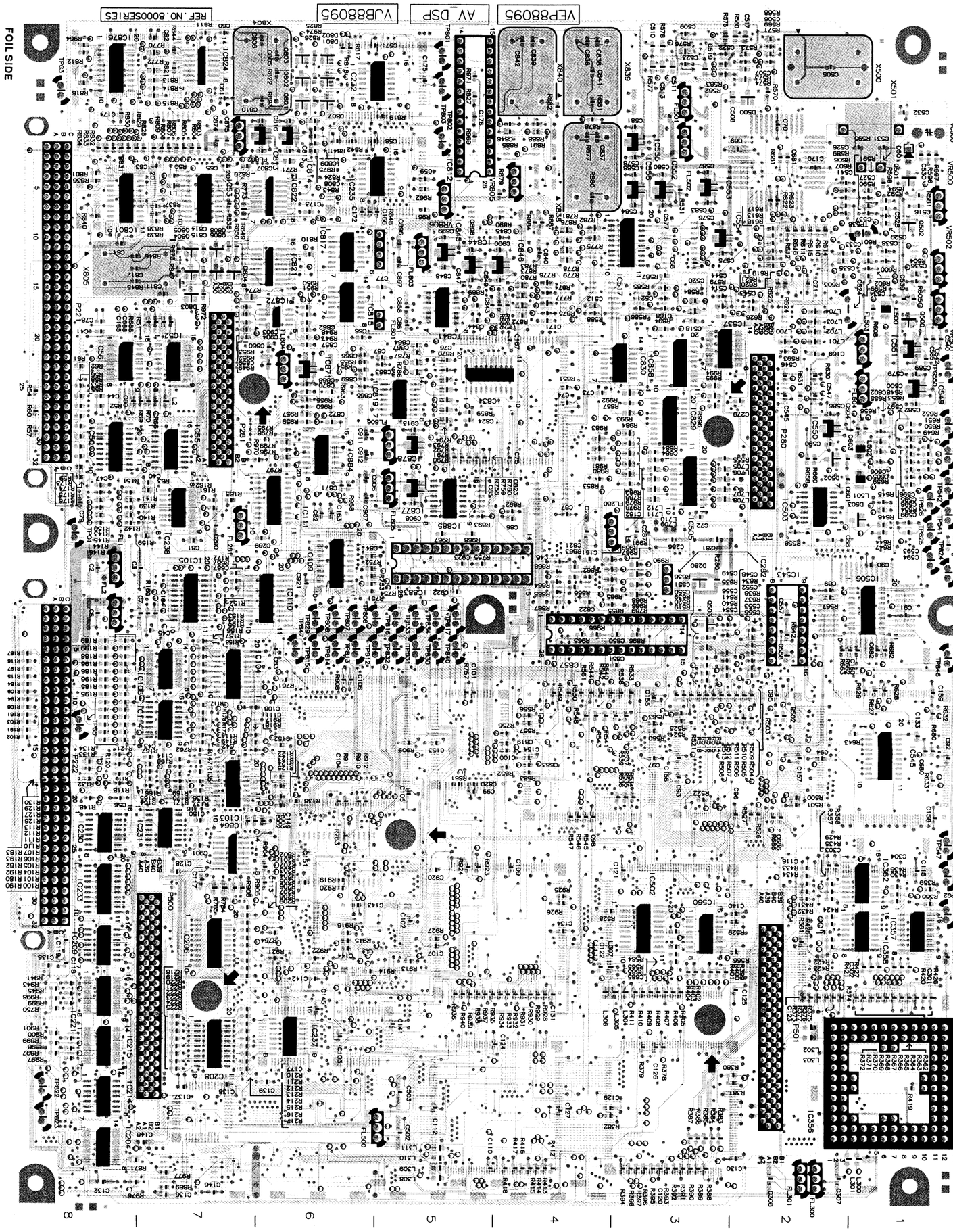

AV DSP SUB 2 (M SUB 2)/VIDEO PROCESS P.C. BOARD (VEP88097

AV DSP (M1)

Transistors

Q8500	H-1	Ⓕ
Q8501	I-1	Ⓕ
Q8502	I-1	Ⓕ
Q8503	F-3	Ⓕ
Q8801	J-6	Ⓕ
Q8802	J-6	Ⓕ
Q8803	J-6	Ⓕ
Q8804	I-7	Ⓕ
Q8805	I-7	Ⓕ
Q8806	I-7	Ⓕ
Q8807	J-6	Ⓕ
Q8808	I-7	Ⓕ

Integrated Circuits

IC8050	G-8	Ⓕ
IC8051	G-7	Ⓒ
IC8052	H-7	Ⓕ
IC8053	I-7	Ⓕ
IC8054	G-8	Ⓒ
IC8055	G-7	Ⓕ
IC8056	H-8	Ⓕ
IC8057	H-8	Ⓒ
IC8100	F-7	Ⓒ
IC8101	F-6	Ⓒ
IC8102	D-8	Ⓒ
IC8103	D-7	Ⓕ
IC8104	E-7	Ⓕ
IC8105	F-7	Ⓕ
IC8106	E-7	Ⓕ
IC8107	D-7	Ⓒ
IC8108	F-7	Ⓒ
IC8109	F-6	Ⓕ
IC8110	F-6	Ⓕ
IC8111	F-6	Ⓕ
IC8112	E-8	Ⓒ
IC8113	E-8	Ⓒ
IC8114	E-7	Ⓕ
IC8115	F-8	Ⓒ
IC8201	A-7	Ⓒ
IC8202	B-6	Ⓒ
IC8203	B-6	Ⓒ
IC8204	A-8	Ⓕ
IC8205	D-7	Ⓒ
IC8206	C-7	Ⓕ
IC8207	C-8	Ⓒ
IC8208	B-7	Ⓕ
IC8209	C-8	Ⓕ
IC8211	C-8	Ⓒ
IC8214	B-8	Ⓕ
IC8215	B-8	Ⓕ
IC8220	B-8	Ⓒ
IC8221	B-8	Ⓕ
IC8222	A-8	Ⓒ
IC8224	B-8	Ⓒ
IC8226	B-8	Ⓒ
IC8230	D-8	Ⓕ
IC8231	D-7	Ⓕ
IC8232	J-6	Ⓕ
IC8233	C-8	Ⓕ
IC8234	B-7	Ⓒ
IC8235	J-6	Ⓕ
IC8236	D-8	Ⓒ
IC8237	B-6	Ⓕ
IC8238	F-7	Ⓕ
IC8282	F-2	Ⓒ
IC8282	F-3	Ⓕ
IC8352	C-2	Ⓒ
IC8353	A-3	Ⓒ
IC8354	C-3	Ⓒ
IC8355	B-4	Ⓒ
IC8356	B-1	Ⓒ
IC8356	A-2	Ⓒ
IC8357	C-1	Ⓕ
IC8358	C-1	Ⓕ
IC8362	C-1	Ⓕ
IC8500	D-2	Ⓒ
IC8501	D-4	Ⓒ
IC8502	C-3	Ⓕ
IC8503	G-2	Ⓕ
IC8504	E-9	Ⓕ
IC8505	G-3	Ⓕ
IC8506	F-1	Ⓕ
IC8507	J-3	Ⓒ
IC8510	H-3	Ⓒ
IC8512	H-4	Ⓒ
IC8516	I-3	Ⓒ
IC8517	I-3	Ⓕ
IC8518	I-3	Ⓒ
IC8521	H-3	Ⓒ
IC8524	J-2	Ⓒ
IC8528	I-1	Ⓒ
IC8530	I-1	Ⓒ
IC8531	H-2	Ⓒ
IC8532	I-1	Ⓒ
IC8534	I-2	Ⓒ
IC8535	I-2	Ⓒ
IC8536	I-2	Ⓒ
IC8537	H-3	Ⓕ
IC8539	H-3	Ⓒ
IC8540	D-1	Ⓒ
IC8541	G-2	Ⓒ
IC8543	F-2	Ⓒ
IC8543	F-2	Ⓕ
IC8544	G-2	Ⓒ
IC8545	D-1	Ⓕ
IC8546	E-3	Ⓒ
IC8548	F-3	Ⓒ
IC8549	H-1	Ⓕ
IC8550	G-2	Ⓕ
IC8551	H-1	Ⓕ
IC8552	I-3	Ⓕ
IC8553	I-3	Ⓕ
IC8554	I-3	Ⓕ
IC8555	J-3	Ⓕ
IC8556	I-3	Ⓕ
IC8557	G-1	Ⓒ
IC8558	G-1	Ⓒ
IC8559	E-1	Ⓒ
IC8560	C-3	Ⓕ
IC8801	I-8	Ⓕ
IC8802	H-6	Ⓒ
IC8803	I-6	Ⓒ
IC8806	J-7	Ⓒ
IC8807	I-7	Ⓒ
IC8808	J-7	Ⓒ
IC8809	I-7	Ⓒ
IC8810	J-6	Ⓒ
IC8811	I-6	Ⓒ
IC8812	I-5	Ⓒ
IC8812	I-5	Ⓕ
IC8813	I-6	Ⓕ
IC8814	J-6	Ⓕ
IC8815	H-6	Ⓕ
IC8817	I-6	Ⓕ
IC8819	G-5	Ⓕ
IC8821	I-6	Ⓕ
IC8822	I-6	Ⓕ
IC8824	J-7	Ⓕ
IC8826	A-7	Ⓒ
IC8827	H-4	Ⓒ
IC8828	D-5	Ⓒ
IC8829	H-3	Ⓕ
IC8830	H-3	Ⓕ
IC8831	H-5	Ⓕ
IC8832	G-3	Ⓒ
IC8833	F-3	Ⓒ
IC8834	G-4	Ⓒ
IC8836	F-4	Ⓒ
IC8841	H-5	Ⓕ
IC8842	I-5	Ⓒ
IC8843	J-4	Ⓒ
IC8844	I-5	Ⓕ
IC8845	I-5	Ⓕ
IC8846	I-4	Ⓕ
IC8847	G-4	Ⓒ
IC8850	H-4	Ⓒ
IC8854	I-4	Ⓒ
IC8857	E-4	Ⓒ
IC8857	E-4	Ⓕ
IC8858	H-3	Ⓕ
IC8859	C-7	Ⓒ
IC8860	D-5	Ⓒ
IC8861	E-7	Ⓒ
IC8862	C-5	Ⓒ
IC8863	D-7	Ⓒ
IC8864	D-7	Ⓕ
IC8865	D-6	Ⓒ
IC8867	C-6	Ⓒ
IC8869	C-4	Ⓒ
IC8870	H-5	Ⓒ
IC8871	H-6	Ⓕ
IC8872	H-7	Ⓕ
IC8874	G-6	Ⓒ
IC8876	J-8	Ⓕ
IC8877	G-5	Ⓕ
IC8878	G-5	Ⓕ
IC8879	A-7	Ⓒ
IC8880	G-6	Ⓒ
IC8881	G-6	Ⓒ
IC8882	F-6	Ⓒ
IC8883	F-5	Ⓒ
IC8883	F-5	Ⓕ
IC8884	G-6	Ⓕ
IC8885	G-5	Ⓕ
IC8886	G-5	Ⓒ

Test Points

TP8300	A-5	Ⓒ
TP8301	A-5	Ⓒ
TP8302	A-5	Ⓒ
TP8303	A-4	Ⓒ
TP8304	A-3	Ⓒ
TP8305	A-3	Ⓒ
TP8306	A-4	Ⓒ
TP8307	A-4	Ⓕ
TP8325	A-1	Ⓒ
TP8326	A-1	Ⓒ
TP8327	B-2	Ⓒ
TP8328	B-1	Ⓒ
TP8350	C-1	Ⓒ
TP8351	C-1	Ⓒ
TP8352	D-1	Ⓒ
TP8353	D-1	Ⓒ
TP8360	A-6	Ⓒ
TP8361	A-4	Ⓒ
TP8362	A-4	Ⓒ
TP8363	A-4	Ⓒ
TP8524	E-1	Ⓒ
TP8526	E-1	Ⓒ
TP8531	C-1	Ⓒ
TP8531	C-1	Ⓕ
TP8538	I-1	Ⓒ
TP8538	I-1	Ⓕ
TP8539	G-1	Ⓒ
TP8539	G-1	Ⓕ
TP8540	J-1	Ⓒ
TP8541	F-1	Ⓒ
TP8541	F-1	Ⓕ
TP8542	G-1	Ⓒ
TP8542	G-1	Ⓕ
TP8543	G-1	Ⓒ
TP8543	G-1	Ⓕ
TP8547	D-1	Ⓒ
TP8547	D-1	Ⓕ
TP8551	H-1	Ⓒ
TP8552	F-1	Ⓒ
TP8552	F-1	Ⓕ
TP8801	J-5	Ⓒ
TP8801	J-5	Ⓕ
TP8802	J-5	Ⓒ
TP8802	J-5	Ⓕ
TP8803	J-5	Ⓒ
TP8803	J-5	Ⓕ
TP8806	F-6	Ⓒ
TP8806	F-6	Ⓕ
TP8807	F-6	Ⓒ
TP8808	F-6	Ⓒ
TP8808	F-6	Ⓕ
TP8812	E-6	Ⓒ
TP8812	E-6	Ⓕ
TP8813	E-6	Ⓒ
TP8813	E-6	Ⓕ
TP8814	E-6	Ⓒ
TP8814	E-6	Ⓕ
TP8815	E-6	Ⓒ
TP8815	E-6	Ⓕ
TP8816	F-5	Ⓒ
TP8816	F-5	Ⓕ
TP8817	F-5	Ⓒ
TP8817	F-5	Ⓕ
TP8818	J-8	Ⓒ
TP8819	J-8	Ⓒ
TP8820	I-8	Ⓒ
TP8821	I-8	Ⓒ
TP8822	B-8	Ⓒ
TP8822	B-8	Ⓕ
TP8823	A-8	Ⓒ
TP8823	A-8	Ⓕ
TP8824	F-1	Ⓒ
TP8824	F-1	Ⓕ
TP8825	F-1	Ⓒ
TP8825	F-1	Ⓕ
TP8826	G-1	Ⓒ
TP8826	G-1	Ⓕ
TP8827	E-4	Ⓒ
TP8828	E-4	Ⓒ
TP8829	F-6	Ⓒ
TP8829	F-6	Ⓕ
TP8830	E-5	Ⓒ
TP8830	E-5	Ⓕ
TP8831	E-5	Ⓒ
TP8831	E-5	Ⓕ
TP8832	E-5	Ⓒ
TP8832	E-5	Ⓕ
TP8833	F-5	Ⓒ
TP8833	F-5	Ⓕ
TP8834	F-5	Ⓒ
TP8834	F-5	Ⓕ
TP8835	A-5	Ⓒ
TP8836	A-5	Ⓒ
TP8837	A-6	Ⓒ
TP8838	A-6	Ⓒ
TP8839	A-7	Ⓒ
TP8840	E-5	Ⓒ
TP8840	E-5	Ⓕ
TP8841	G-8	Ⓒ
TP8842	G-8	Ⓒ
TP8843	J-8	Ⓒ
TP8844	J-7	Ⓒ
TP8845	J-8	Ⓒ
TP8846	E-1	Ⓒ
TP8847	E-6	Ⓒ
TP8847	E-6	Ⓕ
TPG8001	F-8	Ⓒ
TPG8001	F-8	Ⓕ
TPG8002	C-1	Ⓒ
TPG8002	C-1	Ⓕ
TPG8003	J-8	Ⓒ
TPG8003	J-8	Ⓕ
TPG8005	E-8	Ⓒ
TPG8005	E-8	Ⓕ
TPG8550	H-1	Ⓒ
TPG8550	H-1	Ⓕ

Connectors

P8221	H-8	Ⓒ
P8221	H-8	Ⓕ
P8222	D-8	Ⓒ
P8222	D-8	Ⓕ
P8280	G-2	Ⓒ
P8280	G-2	Ⓕ
P8281	G-7	Ⓒ
P8281	G-7	Ⓕ
P8500	C-8	Ⓒ
P8500	C-7	Ⓒ
P8501	B-2	Ⓒ
P8501	B-2	Ⓕ

Switches

SW8801	J-7	Ⓒ
SW8802	J-8	Ⓒ
SW8805	B-8	Ⓒ
SW8806	B-8	Ⓒ

Adjustments

VR8500	I-1	Ⓒ
VR8500	I-1	Ⓕ
VR8501	H-1	Ⓒ
VR8501	H-1	Ⓕ
VR8502	I-1	Ⓒ
VR8502	I-1	Ⓕ
VR8805	I-4	Ⓒ
VR8805	I-4	Ⓕ
VR8806	I-5	Ⓒ
VR8806	I-5	Ⓕ
VC8500	J-1	Ⓒ
VC8500	J-1	Ⓕ

ADDRESS INFORMATION
Ⓒ... COMPONENT SIDE
Ⓕ... FOIL SIDE

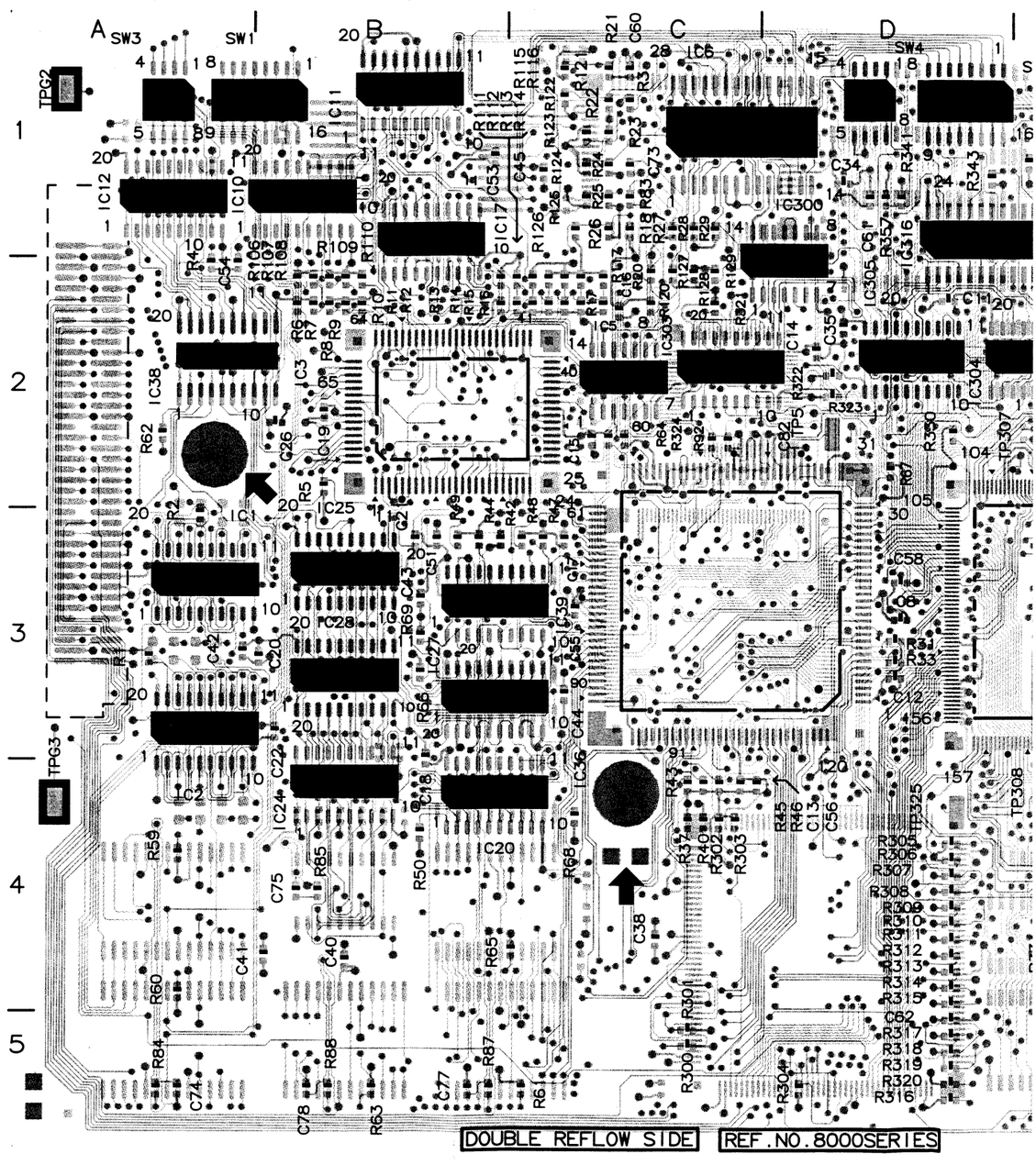

C. BOARD (VEP88097A)

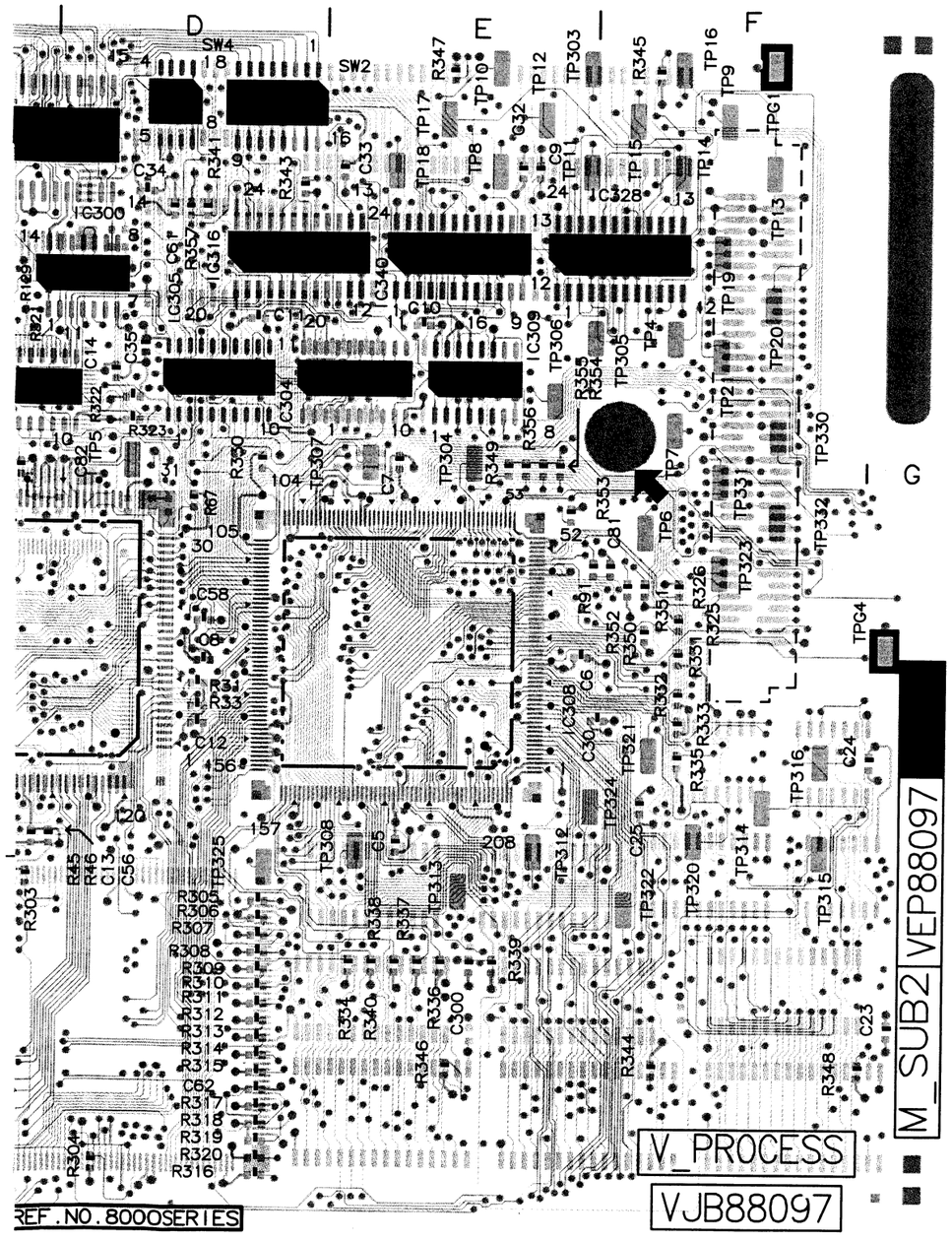

COMPONENT SIDE

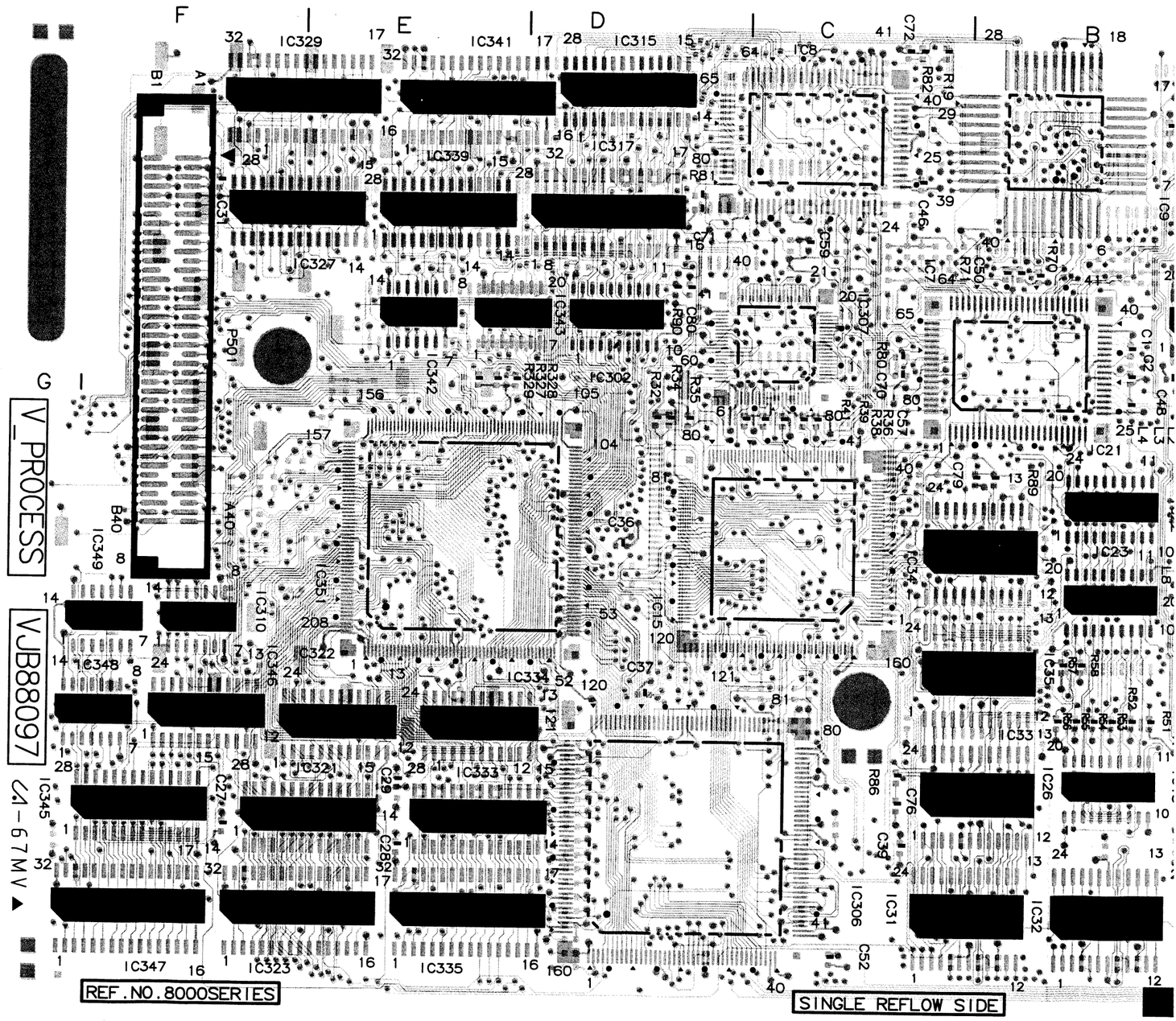

FOIL SIDE

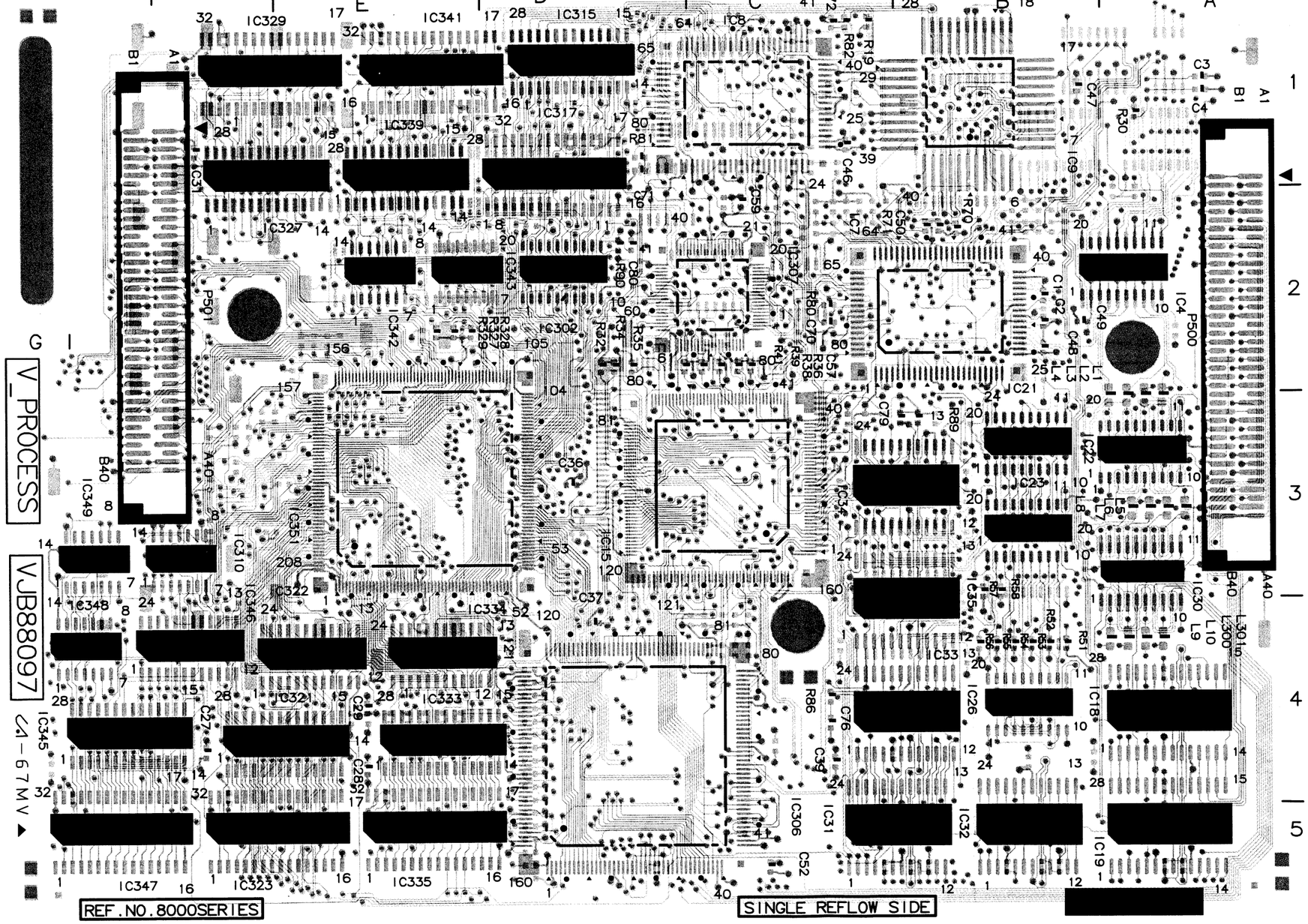

FOIL SIDE

AV DSP (M SUB2)					
Integrated Circuits			IC8345	F-3	Ⓕ
IC8001	A-3	Ⓒ	IC8346	F-4	Ⓕ
IC8002	A-3	Ⓒ	IC8347	F-4	Ⓕ
IC8003	B-2	Ⓒ	IC8348	F-3	Ⓕ
IC8004	A-2	Ⓕ	IC8349	F-3	Ⓕ
IC8005	C-2	Ⓒ	IC8351	E-3	Ⓕ
IC8006	C-1	Ⓒ	**Test Points**		
IC8007	B-2	Ⓕ	TP8004	F-2	Ⓒ
IC8008	C-1	Ⓕ	TP8005	D-2	Ⓒ
IC8009	B-1	Ⓕ	TP8006	E-2	Ⓒ
IC8010	B-1	Ⓒ	TP8007	F-2	Ⓒ
IC8011	B-1	Ⓒ	TP8008	E-1	Ⓒ
IC8012	A-1	Ⓒ	TP8009	F-1	Ⓒ
IC8015	D-3	Ⓕ	TP8010	E-1	Ⓒ
IC8017	B-1	Ⓒ	TP8011	E-1	Ⓒ
IC8018	A-4	Ⓕ	TP8012	E-1	Ⓒ
IC8019	A-5	Ⓕ	TP8013	F-1	Ⓒ
IC8020	B-4	Ⓒ	TP8014	F-1	Ⓒ
IC8021	B-3	Ⓕ	TP8015	F-1	Ⓒ
IC8022	A-3	Ⓕ	TP8016	F-1	Ⓒ
IC8023	B-3	Ⓕ	TP8017	E-1	Ⓒ
IC8024	B-4	Ⓒ	TP8018	E-1	Ⓒ
IC8025	B-3	Ⓒ	TP8019	F-2	Ⓒ
IC8026	B-4	Ⓒ	TP8020	F-2	Ⓒ
IC8027	B-3	Ⓒ	TP8021	F-2	Ⓒ
IC8028	B-3	Ⓒ	TP8303	E-1	Ⓒ
IC8030	A-3	Ⓕ	TP8304	E-2	Ⓒ
IC8031	C-5	Ⓕ	TP8305	F-2	Ⓒ
IC8032	B-5	Ⓕ	TP8306	E-2	Ⓒ
IC8033	B-4	Ⓕ	TP8307	D-2	Ⓒ
IC8034	C-3	Ⓕ	TP8308	E-4	Ⓒ
IC8035	B-3	Ⓕ	TP8309	E-2	Ⓒ
IC8036	C-3	Ⓒ	TP8312	E-4	Ⓒ
IC8038	A-2	Ⓒ	TP8313	E-4	Ⓒ
IC8039	C-3	Ⓒ	TP8314	F-4	Ⓒ
IC8300	D-1	Ⓒ	TP8315	F-4	Ⓒ
IC8302	D-2	Ⓕ	TP8316	F-3	Ⓒ
IC8303	C-2	Ⓒ	TP8320	F-4	Ⓒ
IC8304	D-2	Ⓒ	TP8321	F-3	Ⓒ
IC8305	D-2	Ⓒ	TP8322	F-4	Ⓒ
IC8306	C-5	Ⓕ	TP8323	F-3	Ⓒ
IC8307	C-2	Ⓕ	TP8324	F-3	Ⓒ
IC8308	E-3	Ⓒ	TP8325	D-4	Ⓒ
IC8309	E-1	Ⓒ	TP8330	F-2	Ⓒ
IC8310	F-3	Ⓕ	TP8331	F-2	Ⓒ
IC8315	D-1	Ⓕ	TP8332	F-2	Ⓒ
IC8316	D-1	Ⓒ	TPG8001	F-1	Ⓒ
IC8317	D-1	Ⓕ	TPG8002	A-1	Ⓒ
IC8321	E-4	Ⓕ	TPG8003	A-4	Ⓒ
IC8322	E-4	Ⓕ	TPG8004	G-3	Ⓒ
IC8323	F-4	Ⓕ	**Connectors**		
IC8327	E-1	Ⓕ	P8500	A-2	Ⓕ
IC8328	F-1	Ⓒ	P8501	F-2	Ⓕ
IC8329	F-1	Ⓕ	**Switches**		
IC8333	E-4	Ⓕ	SW8001	A-1	Ⓒ
IC8334	E-4	Ⓕ	SW8002	E-1	Ⓒ
IC8335	E-4	Ⓕ	SW8003	A-1	Ⓒ
IC8339	E-1	Ⓕ	SW8004	D-1	Ⓒ
IC8340	E-1	Ⓒ			
IC8341	E-1	Ⓕ			
IC8342	E-3	Ⓕ			
IC8343	D-2	Ⓕ			

ADDRESS INFORMATION
Ⓒ... COMPONENT SIDE
Ⓕ... FOIL SIDE

REVERSE SIDE
DRIVE (S0)

DRIVE (S0) P.C. BOARD (VEP82092A) (FOR NTSC)
(VEP82092B) (FOR PAL)

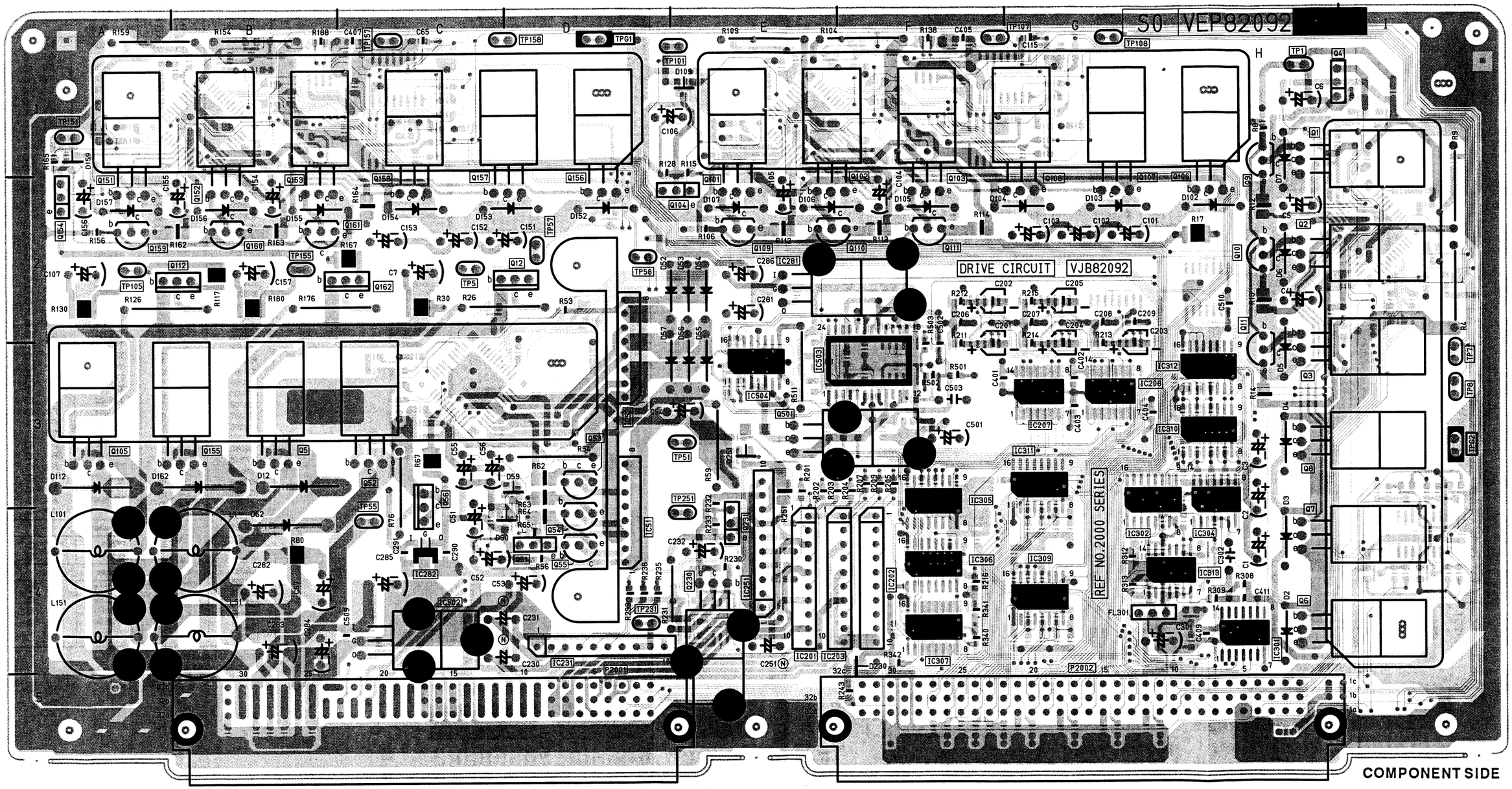

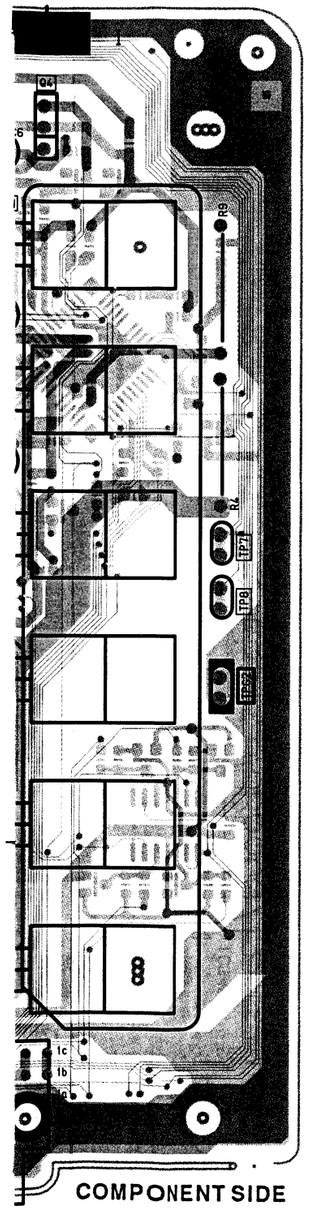

COMPONENT SIDE

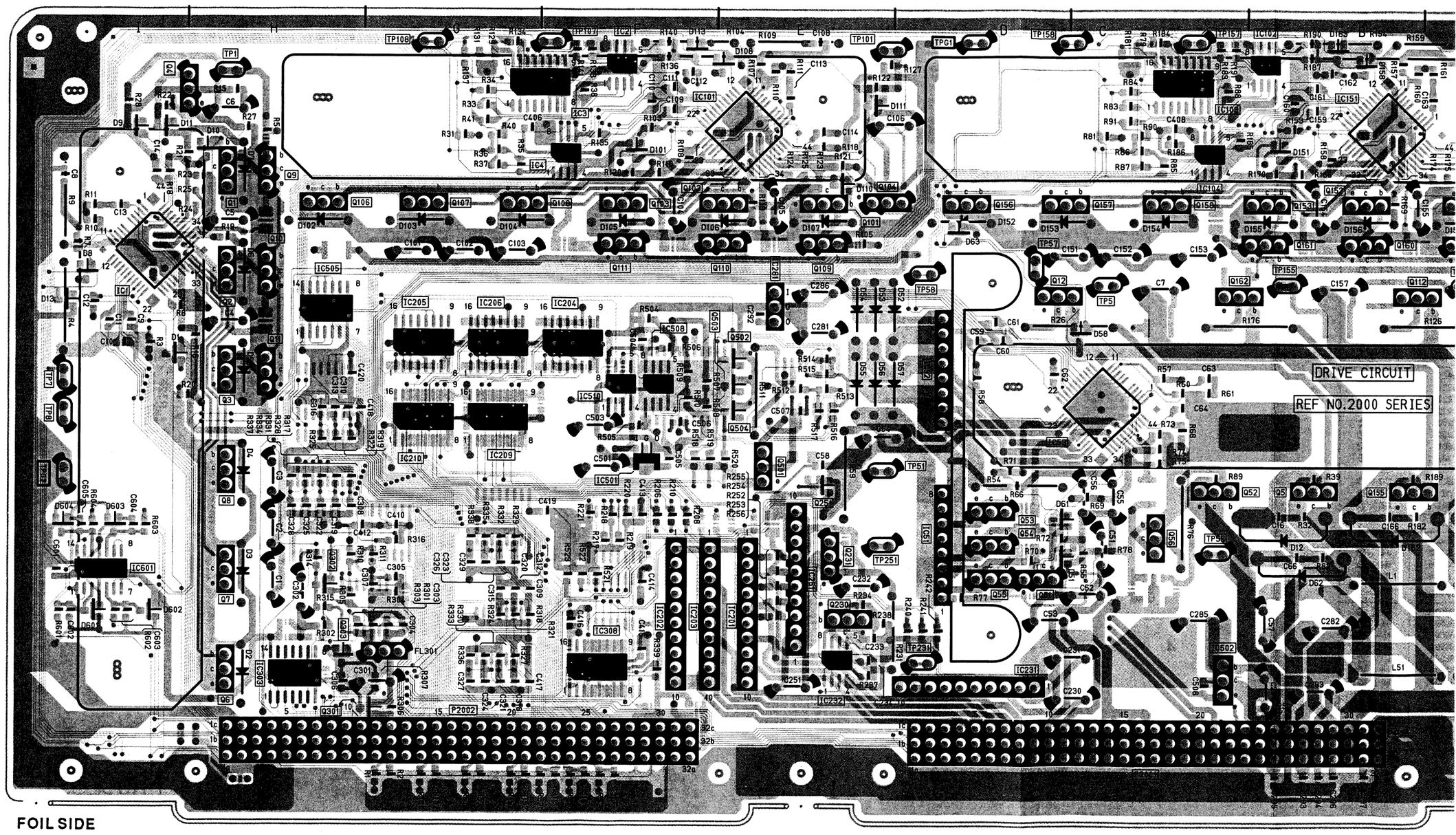

FOIL SIDE

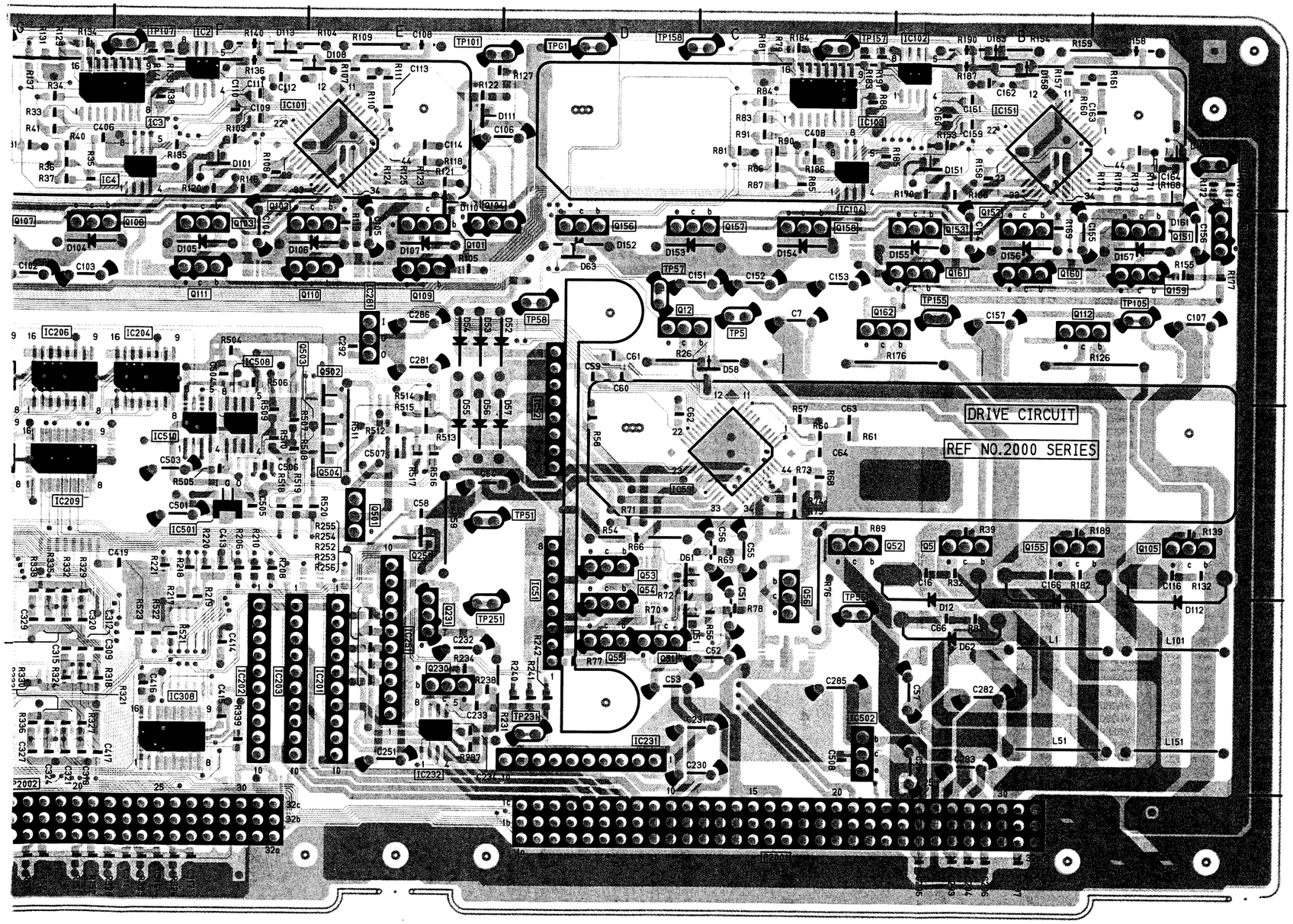

DRIVE (SO)									
Transistors			Q2154	A-2 Ⓕ	IC2304	H-4 Ⓒ
Q2001	H-1 Ⓒ		Q2155	B-3 Ⓒ	IC2305	F-3 Ⓒ
Q2001	H-1 Ⓕ		Q2155	B-3 Ⓕ	IC2306	F-4 Ⓒ
Q2002	H-2 Ⓒ		Q2156	D-2 Ⓒ	IC2307	F-4 Ⓒ
Q2002	H-2 Ⓕ		Q2156	D-2 Ⓕ	IC2308	F-4 Ⓕ
Q2003	H-3 Ⓒ		Q2157	C-2 Ⓒ	IC2309	G-4 Ⓒ
Q2003	H-3 Ⓕ		Q2157	C-2 Ⓕ	IC2310	H-3 Ⓒ
Q2004	I-1 Ⓒ		Q2158	C-2 Ⓒ	IC2311	G-3 Ⓒ
Q2004	I-1 Ⓕ		Q2158	C-2 Ⓕ	IC2312	H-3 Ⓒ
Q2005	B-3 Ⓒ		Q2159	A-2 Ⓒ	IC2313	H-4 Ⓒ
Q2005	B-3 Ⓕ		Q2159	A-2 Ⓕ	IC2310	H-3 Ⓒ
Q2006	H-4 Ⓒ		Q2160	B-2 Ⓒ	IC2501	F-3 Ⓕ
Q2006	H-4 Ⓕ		Q2160	B-2 Ⓕ	IC2502	C-4 Ⓒ
Q2007	H-4 Ⓒ		Q2161	B-2 Ⓒ	IC2502	C-4 Ⓕ
Q2007	H-4 Ⓕ		Q2161	B-2 Ⓕ	IC2503	E-3 Ⓒ
Q2008	H-3 Ⓒ		Q2162	C-2 Ⓒ	IC2504	E-3 Ⓒ
Q2008	H-3 Ⓕ		Q2162	C-2 Ⓕ	IC2505	H-2 Ⓕ
Q2009	H-1 Ⓒ		Q2230	E-4 Ⓒ	IC2508	F-2 Ⓕ
Q2009	H-1 Ⓕ		Q2230	E-4 Ⓕ	IC2510	F-2 Ⓕ
Q2010	H-2 Ⓒ		Q2231	E-4 Ⓒ	IC2601	I-4 Ⓕ
Q2010	H-2 Ⓕ		Q2231	E-4 Ⓕ	**Test Points**	
Q2011	H-2 Ⓒ		Q2301	H-4 Ⓕ	TP2001	H-1 Ⓒ
Q2011	H-2 Ⓕ		Q2302	H-4 Ⓕ	TP2001	H-1 Ⓕ
Q2012	D-2 Ⓒ		Q2303	H-4 Ⓕ	TP2005	C-2 Ⓒ
Q2012	D-2 Ⓕ		Q2251	E-3 Ⓕ	TP2005	C-2 Ⓕ
Q2051	D-4 Ⓒ		Q2501	E-3 Ⓒ	TP2007	I-3 Ⓒ
Q2051	D-4 Ⓕ		Q2502	E-2 Ⓕ	TP2007	I-3 Ⓕ
Q2052	C-3 Ⓒ		Q2503	F-2 Ⓕ	TP2008	I-3 Ⓒ
Q2052	C-3 Ⓕ		Q2504	E-3 Ⓕ	TP2008	I-3 Ⓕ
Q2053	D-3 Ⓒ	**Integrated Circuits**			TP2051	E-3 Ⓒ
Q2053	D-3 Ⓕ		IC2001	I-2 Ⓕ	TP2051	D-3 Ⓕ
Q2054	D-4 Ⓒ		IC2002	F-1 Ⓕ	TP2055	C-4 Ⓒ
Q2054	D-4 Ⓕ		IC2003	F-1 Ⓕ	TP2055	C-4 Ⓕ
Q2055	D-4 Ⓒ		IC2004	F-1 Ⓕ	TP2057	D-2 Ⓒ
Q2055	D-4 Ⓕ		IC2051	D-4 Ⓒ	TP2057	D-2 Ⓕ
Q2056	C-3 Ⓒ		IC2051	D-3 Ⓕ	TP2058	D-2 Ⓒ
Q2056	C-3 Ⓕ		IC2052	D-3 Ⓒ	TP2058	D-2 Ⓕ
Q2101	E-2 Ⓒ		IC2052	D-3 Ⓕ	TP2101	E-1 Ⓒ
Q2101	E-2 Ⓕ		IC2053	C-3 Ⓕ	TP2101	E-1 Ⓕ
Q2102	F-2 Ⓒ		IC2101	E-1 Ⓕ	TP2105	A-2 Ⓒ
Q2102	F-2 Ⓕ		IC2102	B-1 Ⓕ	TP2105	A-2 Ⓕ
Q2103	F-2 Ⓒ		IC2103	C-1 Ⓕ	TP2107	G-1 Ⓒ
Q2103	F-2 Ⓕ		IC2104	C-1 Ⓕ	TP2107	F-1 Ⓒ
Q2104	E-2 Ⓒ		IC2151	B-1 Ⓕ	TP2108	G-1 Ⓒ
Q2104	E-2 Ⓕ		IC2201	E-4 Ⓒ	TP2108	G-1 Ⓕ
Q2105	A-3 Ⓒ		IC2201	E-4 Ⓕ	TP2151	A-1 Ⓒ
Q2105	A-3 Ⓕ		IC2202	F-4 Ⓒ	TP2151	A-1 Ⓕ
Q2106	G-2 Ⓒ		IC2202	F-4 Ⓕ	TP2155	B-2 Ⓒ
Q2106	H-2 Ⓕ		IC2203	E-4 Ⓒ	TP2155	B-2 Ⓕ
Q2107	G-2 Ⓒ		IC2203	F-4 Ⓕ	TP2157	C-1 Ⓒ
Q2107	G-2 Ⓕ		IC2204	F-2 Ⓕ	TP2157	C-1 Ⓕ
Q2108	G-2 Ⓒ		IC2205	G-2 Ⓕ	TP2158	D-1 Ⓒ
Q2108	G-2 Ⓕ		IC2206	G-2 Ⓕ	TP2158	D-1 Ⓕ
Q2109	E-2 Ⓒ		IC2207	G-3 Ⓒ	TP2231	D-4 Ⓒ
Q2109	E-2 Ⓕ		IC2208	G-3 Ⓒ	TP2231	D-4 Ⓕ
Q2110	F-2 Ⓒ		IC2209	G-3 Ⓕ	TP2251	E-4 Ⓒ
Q2110	F-2 Ⓕ		IC2210	G-3 Ⓕ	TP2251	E-4 Ⓕ
Q2111	F-2 Ⓒ		IC2231	D-4 Ⓒ	TPG2001	D-1 Ⓒ
Q2111	F-2 Ⓕ		IC2231	D-4 Ⓕ	TPG2001	D-1 Ⓕ
Q2112	B-2 Ⓒ		IC2232	E-4 Ⓕ	TPG2002	I-3 Ⓒ
Q2112	B-2 Ⓕ		IC2251	E-4 Ⓒ	TPG2002	I-3 Ⓕ
Q2151	A-2 Ⓒ		IC2251	E-4 Ⓕ	**Connectors**	
Q2151	A-2 Ⓕ		IC2281	E-2 Ⓒ		
Q2152	B-2 Ⓒ		IC2281	E-2 Ⓕ	P2001	D-5 Ⓕ
Q2152	B-2 Ⓕ		IC2282	C-4 Ⓒ	P2001	C-5 Ⓕ
Q2153	B-2 Ⓒ		IC2301	H-4 Ⓒ	P2002	G-5 Ⓕ
Q2153	B-2 Ⓕ		IC2302	G-4 Ⓒ	P2002	G-5 Ⓕ
Q2154	A-2 Ⓒ		IC2303	H-4 Ⓕ		

ADDRESS INFORMATION
Ⓒ... COMPONENT SIDE
Ⓕ... FOIL SIDE

EQ1 (S1) P.C. BOARD (VEP85036A) (FOR NTSC)
(VEP85036B) (FOR PAL)

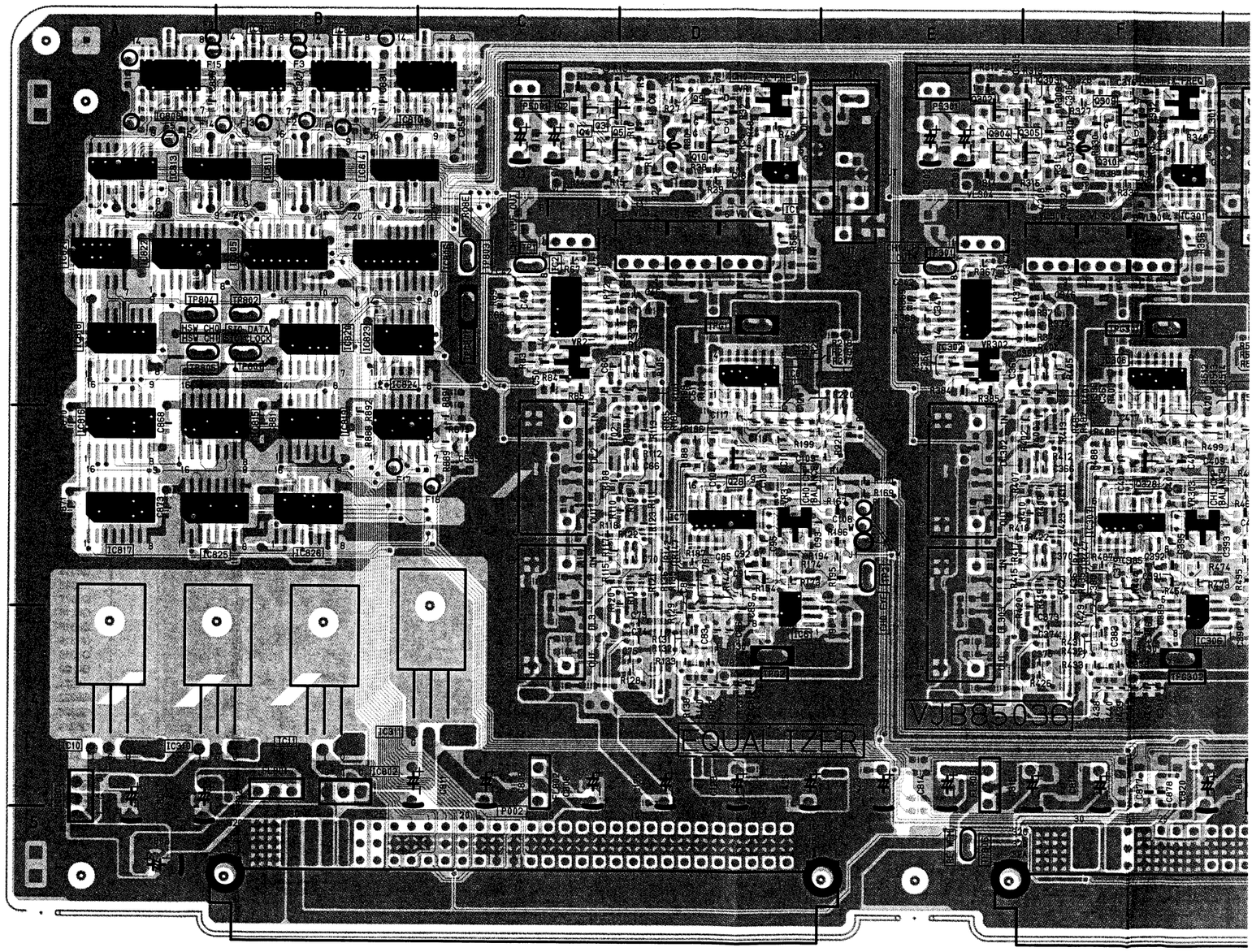

EQ1 (S1)

Transistors		
Q5001	C-1	Ⓕ
Q5002	C-1	Ⓒ
Q5003	C-1	Ⓒ
Q5004	C-1	Ⓒ
Q5005	C-1	Ⓒ
Q5006	D-1	Ⓕ
Q5007	D-1	Ⓕ
Q5008	D-1	Ⓕ
Q5009	D-1	Ⓒ
Q5010	D-1	Ⓒ
Q5011	D-1	Ⓕ
Q5012	D-2	Ⓕ
Q5013	C-2	Ⓕ
Q5014	C-1	Ⓕ
Q5015	C-2	Ⓕ
Q5016	C-2	Ⓕ
Q5017	C-2	Ⓕ
Q5018	C-3	Ⓕ
Q5019	C-4	Ⓕ
Q5020	C-3	Ⓕ
Q5021	D-4	Ⓕ
Q5022	D-4	Ⓕ
Q5023	D-4	Ⓕ
Q5024	D-3	Ⓕ
Q5025	D-3	Ⓕ
Q5026	D-3	Ⓕ
Q5027	D-3	Ⓕ
Q5028	D-3	Ⓒ
Q5029	D-3	Ⓕ
Q5030	E-3	Ⓕ
Q5301	E-1	Ⓕ
Q5302	E-1	Ⓒ
Q5303	F-1	Ⓒ
Q5304	E-1	Ⓒ
Q5305	F-1	Ⓒ
Q5306	F-1	Ⓕ
Q5307	F-1	Ⓕ
Q5308	F-1	Ⓕ
Q5309	F-1	Ⓒ
Q5310	F-1	Ⓒ
Q5311	F-1	Ⓕ
Q5312	F-2	Ⓕ
Q5313	E-2	Ⓕ
Q5314	E-1	Ⓕ
Q5315	E-2	Ⓕ
Q5316	E-2	Ⓕ
Q5317	E-2	Ⓕ
Q5318	E-3	Ⓕ
Q5319	E-4	Ⓕ
Q5320	E-3	Ⓕ
Q5321	F-4	Ⓕ
Q5322	F-4	Ⓕ
Q5323	F-4	Ⓕ
Q5324	F-3	Ⓕ
Q5325	F-3	Ⓕ
Q5326	F-3	Ⓕ
Q5327	F-3	Ⓕ
Q5328	F-3	Ⓒ
Q5329	G-3	Ⓕ
Q5330	G-3	Ⓕ
Q5601	I-3	Ⓕ
Q5602	I-3	Ⓕ
Q5603	I-3	Ⓕ
Q5604	C-3	Ⓕ
Q5701	H-1	Ⓕ
Q5702	I-1	Ⓕ
Q5703	I-2	Ⓕ
Q5801	F-4	Ⓕ
Q5802	F-4	Ⓕ
Q5803	F-4	Ⓕ
Q5804	F-4	Ⓕ

Integrated Circuits		
IC5001	D-1	Ⓒ
IC5002	C-2	Ⓒ
IC5003	D-2	Ⓕ
IC5004	D-3	Ⓕ
IC5005	D-3	Ⓕ
IC5006	D-4	Ⓒ
IC5007	D-3	Ⓒ
IC5008	D-2	Ⓒ
IC5009	E-2	Ⓕ
IC5010	A-4	Ⓒ
IC5010	A-4	Ⓕ
IC5011	B-4	Ⓒ
IC5011	B-4	Ⓕ
IC5301	F-1	Ⓒ
IC5302	E-2	Ⓒ
IC5303	F-2	Ⓕ
IC5304	F-3	Ⓕ
IC5305	F-3	Ⓕ
IC5306	F-4	Ⓒ
IC5307	F-3	Ⓒ
IC5308	F-2	Ⓒ
IC5309	G-2	Ⓕ
IC5310	A-4	Ⓒ
IC5310	A-4	Ⓕ
IC5310	B-4	Ⓒ
IC5310	C-4	Ⓕ
IC5601	G-4	Ⓒ
IC5602	G-4	Ⓒ
IC5603	H-4	Ⓒ
IC5604	H-4	Ⓒ
IC5605	I-3	Ⓒ
IC5606	H-4	Ⓒ
IC5606	H-4	Ⓕ
IC5607	I-4	Ⓒ
IC5608	H-3	Ⓒ
IC5608	H-3	Ⓕ
IC5609	H-3	Ⓕ
IC5701	G-2	Ⓒ
IC5702	G-2	Ⓒ
IC5703	H-2	Ⓒ
IC5704	H-2	Ⓒ
IC5705	I-1	Ⓒ
IC5706	H-2	Ⓒ
IC5706	H-2	Ⓕ
IC5707	I-2	Ⓒ
IC5708	H-1	Ⓒ
IC5708	H-1	Ⓕ
IC5709	H-1	Ⓕ
IC5801	A-4	Ⓒ
IC5801	A-4	Ⓕ
IC5802	B-4	Ⓒ
IC5802	B-4	Ⓕ
IC5803	F-4	Ⓕ
IC5804	G-1	Ⓒ
IC5804	G-1	Ⓕ
IC5805	B-2	Ⓒ
IC5806	B-2	Ⓒ
IC5807	B-1	Ⓒ
IC5808	A-1	Ⓒ
IC5809	B-1	Ⓒ
IC5810	B-1	Ⓒ
IC5811	B-1	Ⓒ
IC5812	A-1	Ⓒ
IC5813	A-1	Ⓒ
IC5814	B-1	Ⓒ
IC5815	B-3	Ⓒ
IC5816	A-3	Ⓒ
IC5817	A-3	Ⓒ
IC5818	A-2	Ⓒ
IC5819	B-3	Ⓒ
IC5820	B-2	Ⓒ
IC5821	A-2	Ⓒ
IC5822	A-2	Ⓒ
IC5823	B-2	Ⓒ
IC5824	B-3	Ⓒ
IC5825	A-3	Ⓒ
IC5826	B-3	Ⓒ

Test Points		
TP5001	C-2	Ⓒ
TP5001	C-2	Ⓕ
TP5002	E-3	Ⓒ
TP5002	E-3	Ⓕ
TP5301	E-2	Ⓒ
TP5301	E-2	Ⓕ
TP5302	G-3	Ⓒ
TP5302	G-3	Ⓕ
TP5601	H-4	Ⓒ
TP5601	H-4	Ⓕ
TP5602	I-4	Ⓒ
TP5602	I-4	Ⓕ
TP5603	H-3	Ⓒ
TP5603	H-3	Ⓕ
TP5604	H-3	Ⓒ
TP5604	H-3	Ⓕ
TP5605	H-3	Ⓒ
TP5605	H-3	Ⓕ
TP5701	H-2	Ⓒ
TP5701	H-2	Ⓕ
TP5702	I-2	Ⓒ
TP5702	I-2	Ⓕ
TP5703	H-1	Ⓒ
TP5703	H-1	Ⓕ
TP5704	H-1	Ⓒ
TP5704	H-1	Ⓕ
TP5705	H-1	Ⓒ
TP5705	H-1	Ⓕ
TP5801	B-2	Ⓒ
TP5801	B-2	Ⓕ
TP5802	B-2	Ⓒ
TP5802	B-2	Ⓕ
TP5803	C-2	Ⓒ
TP5803	C-2	Ⓕ
TP5804	A-2	Ⓒ
TP5804	A-2	Ⓕ
TP5805	A-2	Ⓒ
TP5805	A-2	Ⓕ
TP5806	E-5	Ⓒ
TP5806	E-5	Ⓕ
TPG5001	D-2	Ⓒ
TPG5001	D-2	Ⓕ
TPG5002	D-4	Ⓒ
TPG5002	D-4	Ⓕ
TPG5301	F-2	Ⓒ
TPG5301	F-2	Ⓕ
TPG5302	F-4	Ⓒ
TPG5302	F-4	Ⓕ
TPG5601	I-4	Ⓒ
TPG5601	I-4	Ⓕ
TPG5701	I-2	Ⓒ
TPG5701	I-2	Ⓕ
TPG5801	C-2	Ⓒ
TPG5801	C-2	Ⓕ

Adjustments		
VC5601	I-4	Ⓒ
VC5601	I-4	Ⓕ
VC5701	I-2	Ⓒ
VC5701	I-2	Ⓕ
VL5001	D-2	Ⓒ
VL5001	D-2	Ⓕ
VL5002	D-2	Ⓒ
VL5002	D-2	Ⓕ
VL5003	D-2	Ⓒ
VL5003	D-2	Ⓕ
VL5004	C-1	Ⓒ
VL5004	C-2	Ⓕ
VL5301	F-2	Ⓒ
VL5301	F-2	Ⓕ
VL5302	F-2	Ⓒ
VL5302	F-2	Ⓕ
VL5303	F-2	Ⓒ
VL5303	F-2	Ⓕ
VL5304	E-1	Ⓒ
VL5304	E-2	Ⓕ
VL5601	I-3	Ⓒ
VL5601	I-3	Ⓕ
VL5701	I-1	Ⓒ
VL5701	I-1	Ⓕ
VR5001	D-1	Ⓒ
VR5002	C-2	Ⓒ
VR5003	D-3	Ⓒ
VR5301	F-1	Ⓒ
VR5302	E-2	Ⓒ
VR5303	F-2	Ⓒ
VR5601	H-3	Ⓒ
VR5602	H-3	Ⓒ
VR5603	H-3	Ⓒ
VR5701	H-1	Ⓒ
VR5702	H-1	Ⓒ
VR5703	H-1	Ⓒ

Connectors		
P001	G-5	Ⓒ
P001	G-5	Ⓕ
P002	C-5	Ⓒ
P002	C-5	Ⓕ
P5001	C-1	Ⓒ
P5001	C-1	Ⓕ
P5301	E-1	Ⓒ
P5301	E-1	Ⓕ

ADDRESS INFORMATION
Ⓒ... COMPONENT SIDE
Ⓕ... FOIL SIDE

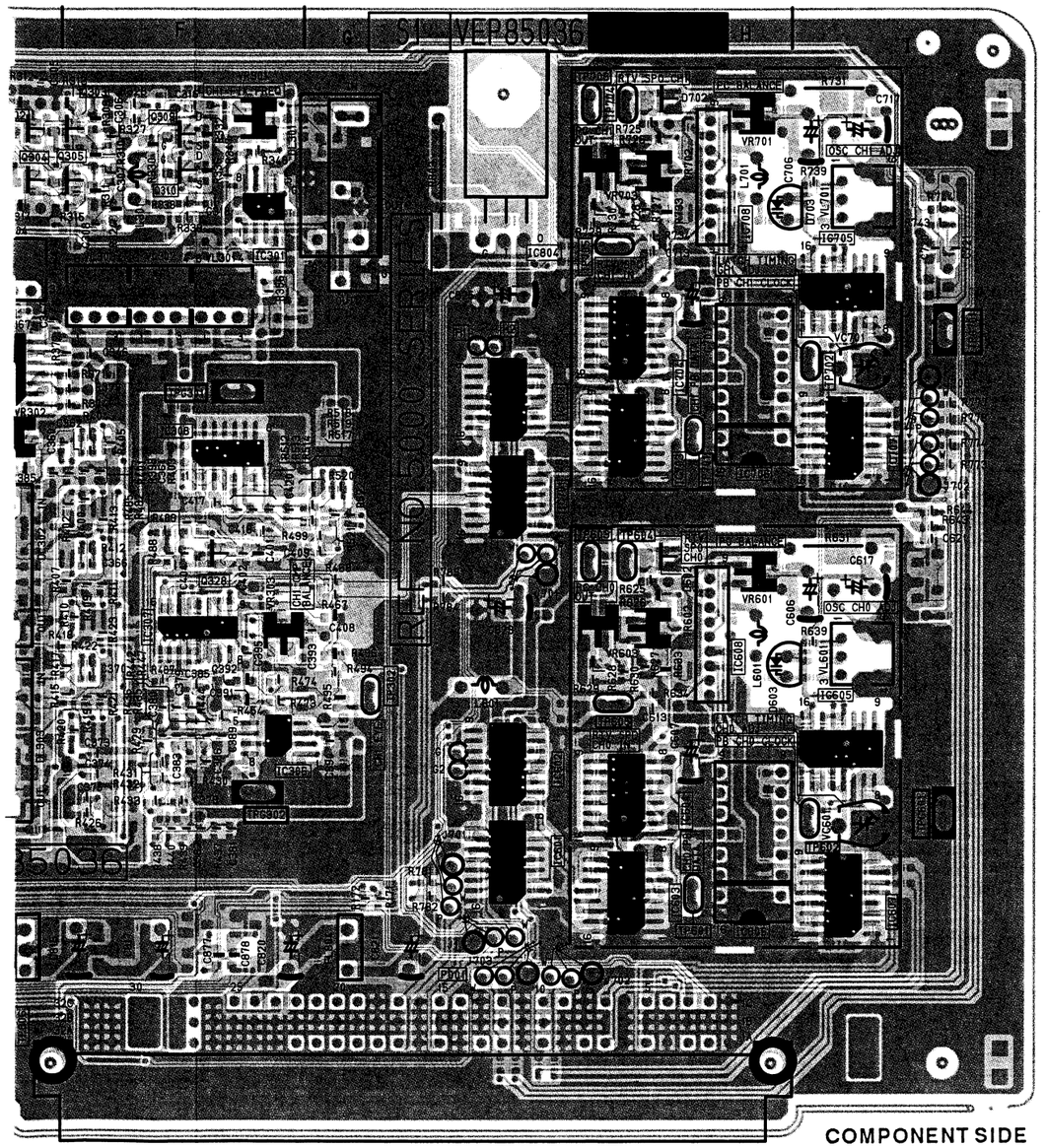

COMPONENT SIDE

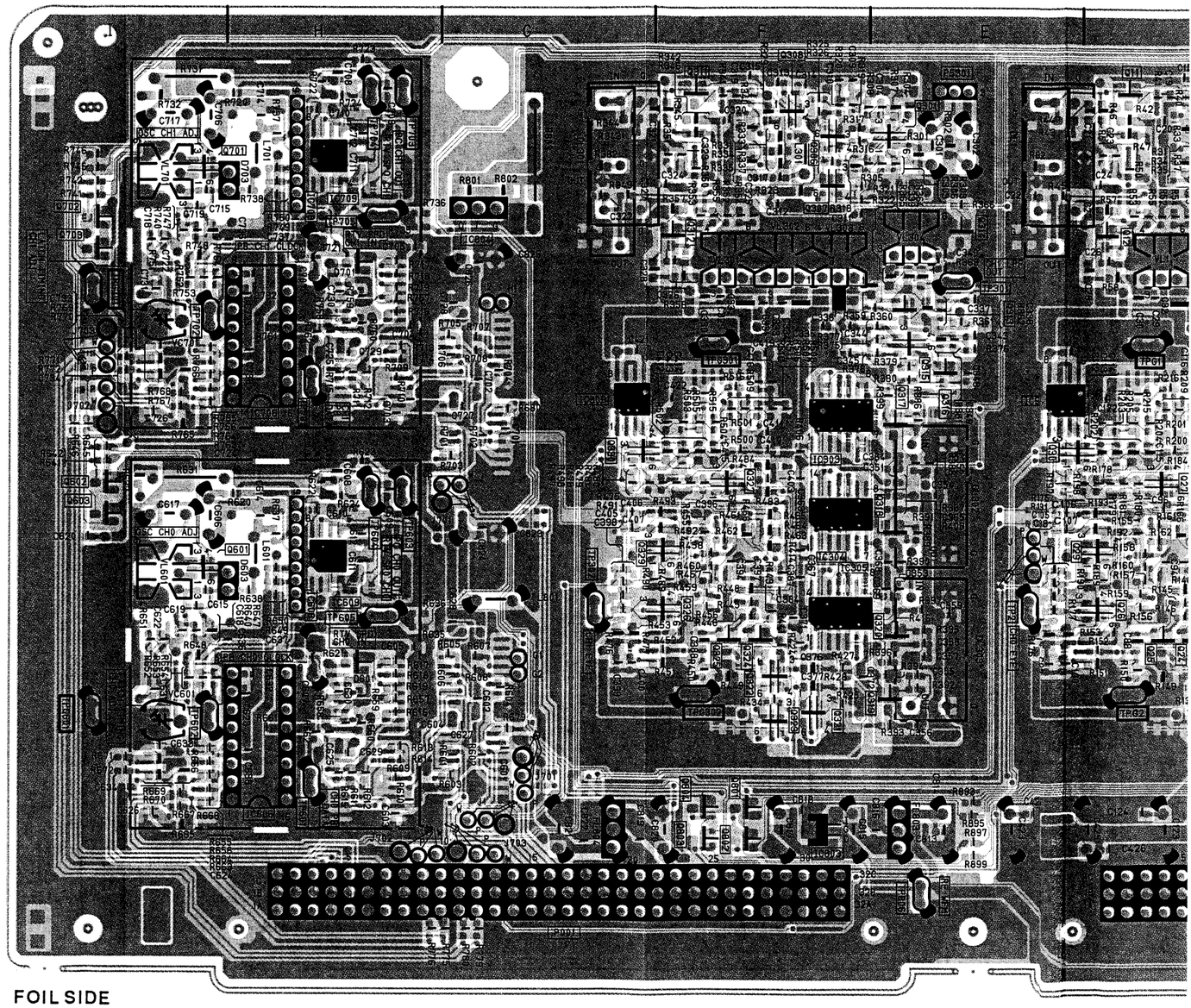

FOIL SIDE

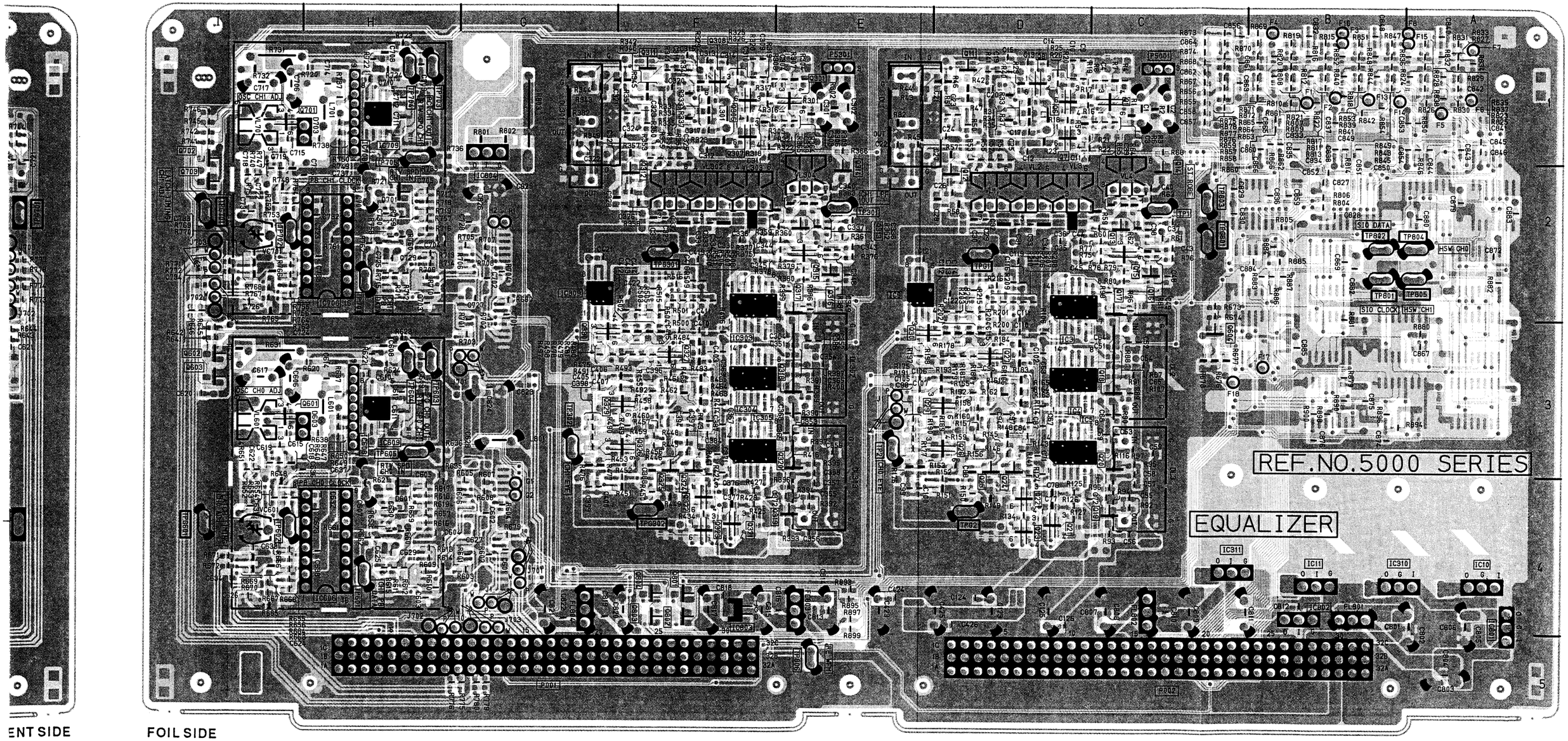

ENT SIDE

FOIL SIDE

REVERSE SIDE
TC/CUE (S3)

TC/CUE (S3) P.C. BOARD (VEP86123A) (FOR NTSC)
(VEP86123B) (FOR PAL)

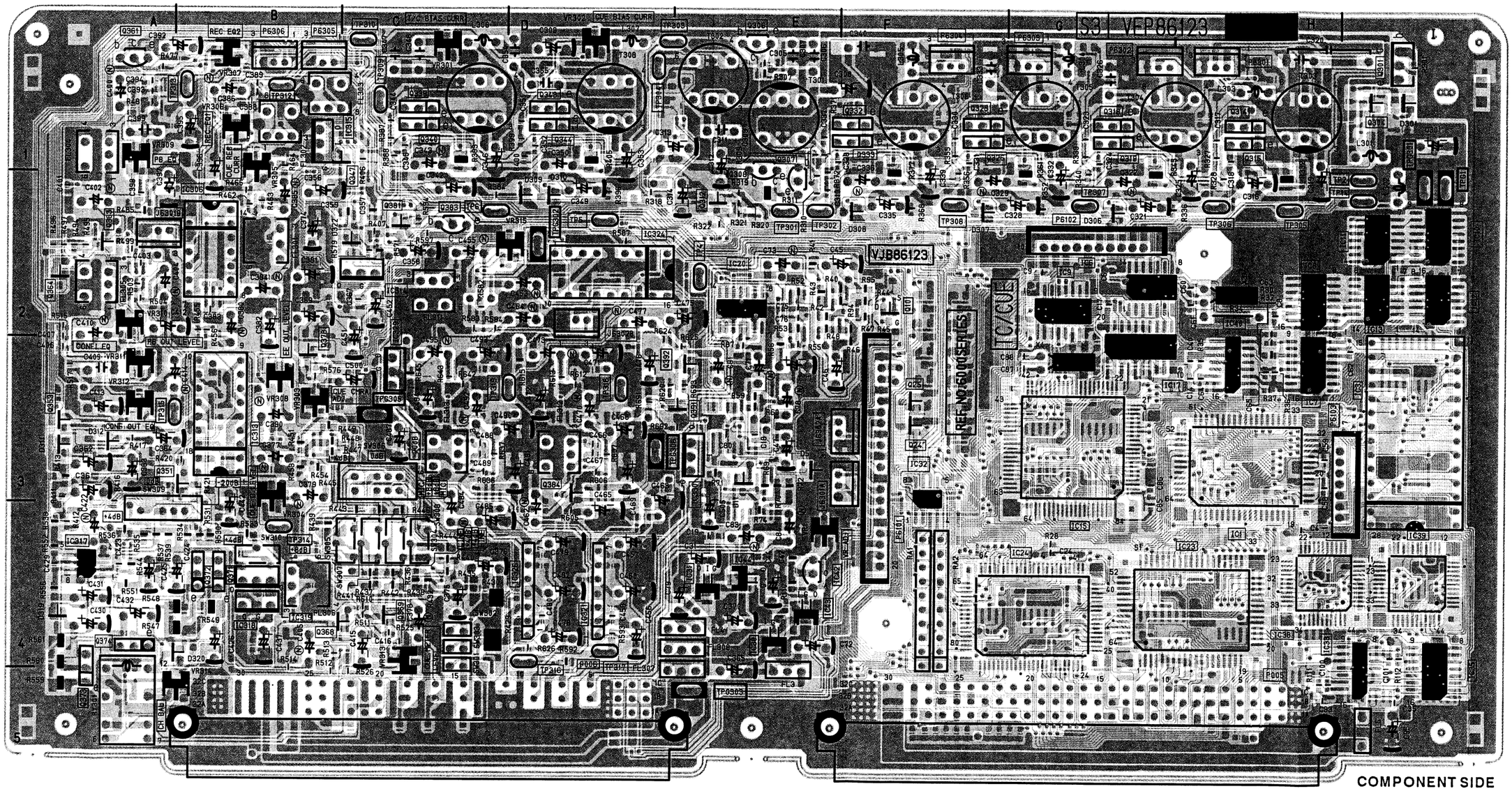

COMPONENT SIDE

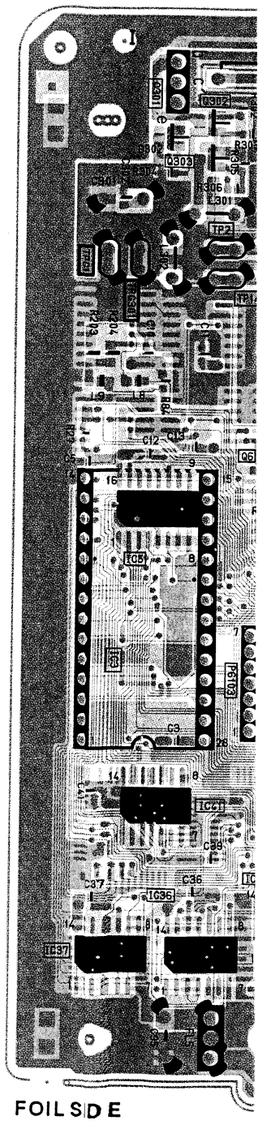

FOIL SIDE

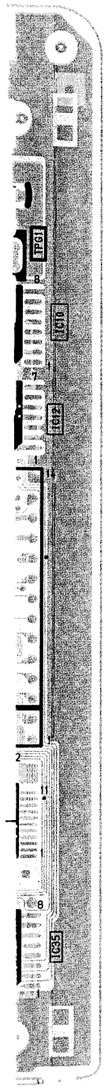

IT SIDE

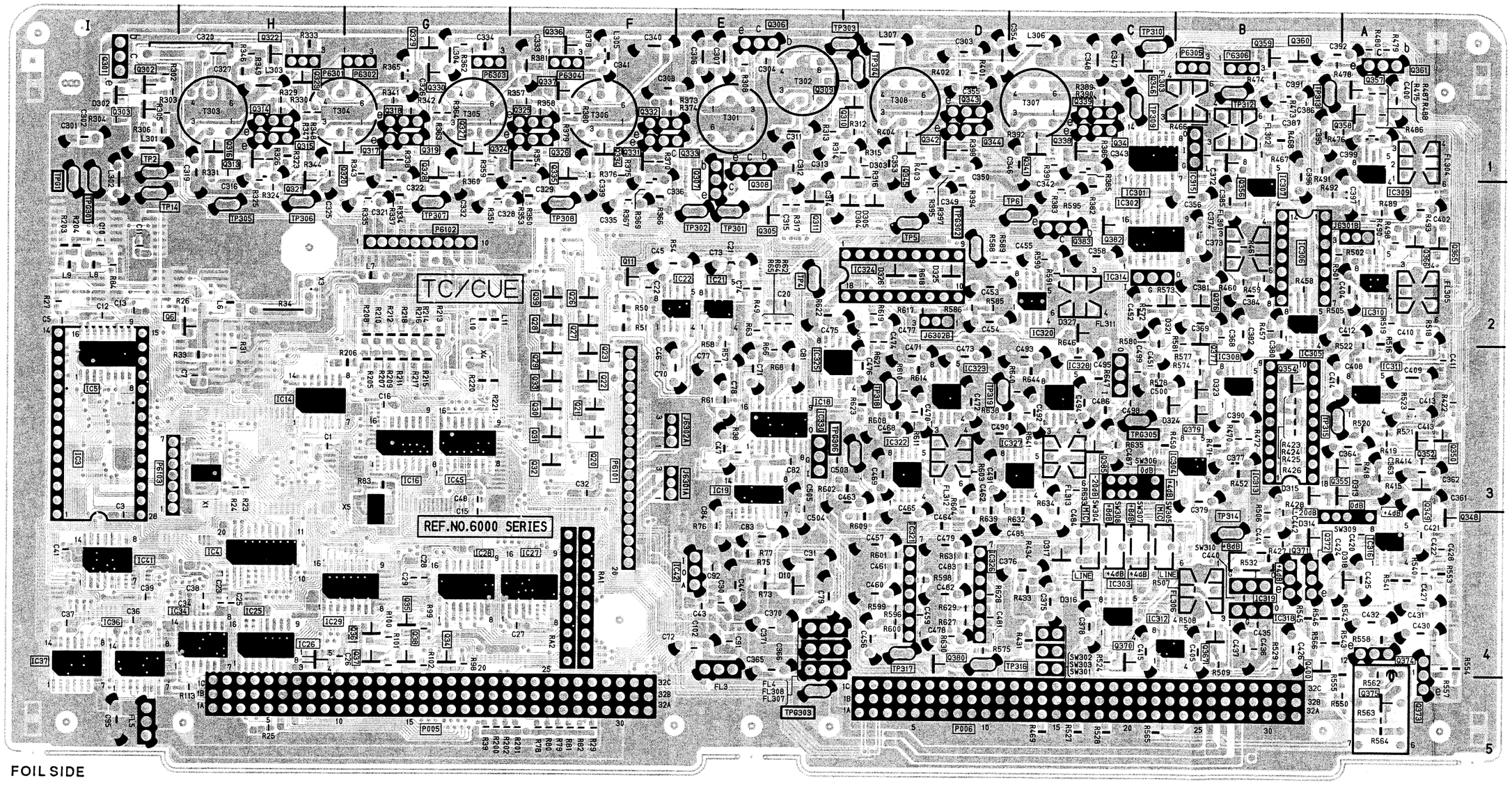

FOIL SIDE

Transistors
Q6006
Q6010
Q6011
Q6020
Q6021
Q6022
Q6023
Q6024
Q6025
Q6026
Q6027
Q6028
Q6029
Q6030
Q6031
Q6032
Q6033
Q6034
Q6035
Q6036
Q6037
Q6038
Q6039
Q6042
Q6042
Q6301
Q6301
Q6302
Q6303
Q6304
Q6305
Q6306
Q6306
Q6307
Q6307
Q6308
Q6308
Q6309
Q6310
Q6311
Q6312
Q6313
Q6314
Q6314
Q6315
Q6315
Q6316
Q6317
Q6318
Q6318
Q6319
Q6319
Q6320
Q6321
Q6322
Q6323
Q6324
Q6325
Q6325
Q6326
Q6326
Q6327
Q6328
Q6329
Q6330
Q6331
Q6332
Q6332

ADDRESS INFORMA
©... COMPONENT
Ⓕ... FOIL SIDE

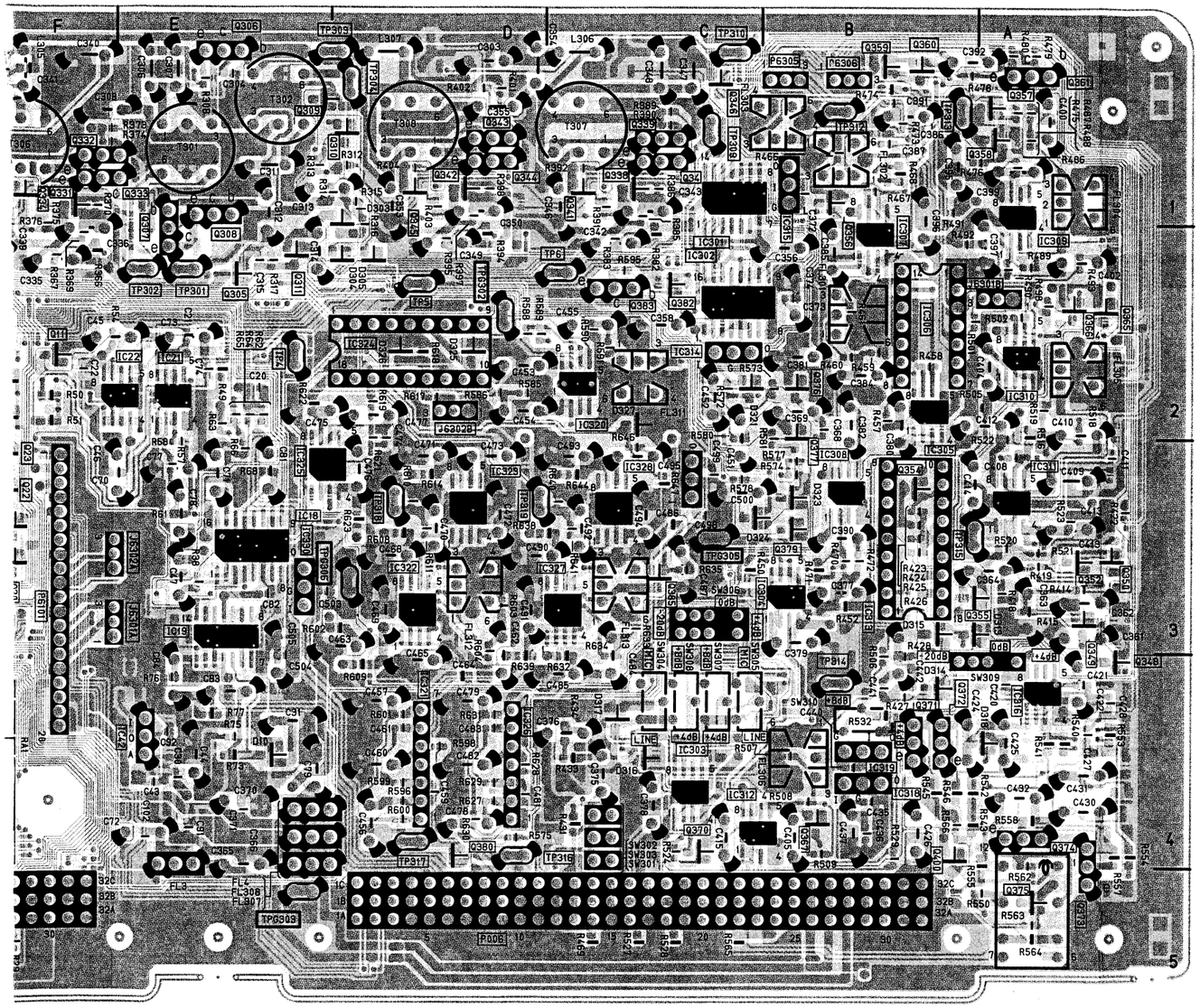

TC/CUE (S3)

Transistors																	
Q6006	I-2	Ⓕ	Q6333	F-1	Ⓒ	IC6005	I-3	Ⓕ	IC6322	D-3	Ⓕ	TPG6306	D-3	Ⓒ
Q6010	F-2	Ⓒ	Q6333	F-1	Ⓕ	IC6006	G-2	Ⓒ	IC6323	D-3	Ⓕ	TPG6306	E-3	Ⓕ
Q6011	F-2	Ⓕ	Q6334	F-1	Ⓕ	IC6007	H-3	Ⓒ	IC6324	D-2	Ⓒ	**Adjustments**		
Q6020	F-3	Ⓕ	Q6335	F-1	Ⓕ	IC6008	H-2	Ⓒ	IC6324	D-2	Ⓕ			
Q6021	F-3	Ⓕ	Q6336	F-1	Ⓕ	IC6009	G-2	Ⓒ	IC6325	E-3	Ⓕ	VR6001	E-4	Ⓒ
Q6022	F-3	Ⓒ	Q6337	F-1	Ⓕ	IC6010	I-2	Ⓒ	IC6326	D-4	Ⓒ	VR6301	C-1	Ⓒ
Q6023	F-3	Ⓕ	Q6338	C-1	Ⓕ	IC6011	I-2	Ⓒ	IC6326	D-4	Ⓕ	VR6302	D-1	Ⓒ
Q6024	F-3	Ⓒ	Q6339	C-1	Ⓒ	IC6012	I-2	Ⓒ	IC6327	C-3	Ⓕ	VR6303	B-3	Ⓒ
Q6025	F-3	Ⓒ	Q6340	C-1	Ⓒ	IC6013	I-2	Ⓒ	IC6328	C-3	Ⓕ	VR6304	B-4	Ⓒ
Q6026	F-2	Ⓕ	Q6341	C-1	Ⓕ	IC6014	H-3	Ⓕ	IC6329	C-2	Ⓒ	VR6305	B-1	Ⓒ
Q6027	F-2	Ⓕ	Q6342	D-1	Ⓕ	IC6015	G-3	Ⓒ	IC6330	E-3	Ⓒ	VR6306	B-1	Ⓒ
Q6028	F-2	Ⓕ	Q6343	D-1	Ⓒ	IC6016	G-3	Ⓕ	IC6330	E-3	Ⓕ	VR6307	B-1	Ⓒ
Q6029	F-3	Ⓕ	Q6343	D-1	Ⓕ	IC6017	G-3	Ⓒ				VR6308	B-3	Ⓒ
Q6030	F-3	Ⓕ	Q6344	D-1	Ⓒ	IC6018	E-3	Ⓕ	**Test Points**			VR6309	A-1	Ⓒ
Q6031	F-3	Ⓕ	Q6344	D-1	Ⓕ	IC6019	E-3	Ⓕ				VR6310	A-2	Ⓒ
Q6032	F-3	Ⓕ	Q6345	D-1	Ⓕ	IC6020	E-2	Ⓒ	TP6002	I-1	Ⓒ	VR6311	A-3	Ⓒ
Q6033	F-3	Ⓕ	Q6346	C-1	Ⓕ	IC6021	E-2	Ⓕ	TP6002	I-1	Ⓕ	VR6312	A-3	Ⓒ
Q6034	G-4	Ⓕ	Q6347	C-2	Ⓒ	IC6022	E-2	Ⓕ	TP6004	E-2	Ⓒ	VR6313	C-5	Ⓒ
Q6035	G-4	Ⓕ	Q6348	A-4	Ⓕ	IC6023	H-4	Ⓒ	TP6004	E-2	Ⓕ	VR6314	B-5	Ⓒ
Q6036	G-4	Ⓕ	Q6349	A-3	Ⓕ	IC6024	G-4	Ⓒ	TP6005	D-2	Ⓒ	VR6315	D-2	Ⓒ
Q6037	G-4	Ⓕ	Q6350	A-3	Ⓕ	IC6025	H-4	Ⓕ	TP6005	D-2	Ⓕ			
Q6038	G-4	Ⓕ	Q6351	A-3	Ⓒ	IC6026	H-4	Ⓕ	TP6006	C-2	Ⓒ	**Connectors**		
Q6039	F-2	Ⓕ	Q6352	A-3	Ⓕ	IC6027	F-4	Ⓕ	TP6006	C-2	Ⓕ			
Q6042	E-4	Ⓒ	Q6353	A-3	Ⓒ	IC6028	G-4	Ⓕ	TP6014	I-2	Ⓒ	P005	H-5	Ⓒ
Q6042	E-4	Ⓕ	Q6354	B-3	Ⓕ	IC6029	H-4	Ⓕ	TP6014	I-2	Ⓕ	P005	G-5	Ⓕ
Q6301	I-1	Ⓒ	Q6355	A-3	Ⓕ	IC6030	E-4	Ⓒ	TP6301	E-2	Ⓒ	P006	D-5	Ⓒ
Q6301	I-1	Ⓕ	Q6356	B-2	Ⓕ	IC6031	E-4	Ⓒ	TP6301	E-2	Ⓕ	P006	D-5	Ⓕ
Q6302	I-1	Ⓕ	Q6357	A-1	Ⓕ	IC6032	F-3	Ⓒ	TP6302	E-2	Ⓒ	P6101	F-4	Ⓒ
Q6303	I-1	Ⓕ	Q6358	A-1	Ⓕ	IC6033	H-4	Ⓒ	TP6302	E-2	Ⓕ	P6101	F-3	Ⓕ
Q6304	I-1	Ⓒ	Q6359	B-1	Ⓕ	IC6034	H-4	Ⓕ	TP6303	D-1	Ⓒ	P6102	G-2	Ⓒ
Q6305	E-2	Ⓕ	Q6360	B-1	Ⓕ	IC6035	I-4	Ⓒ	TP6303	D-1	Ⓕ	P6102	G-2	Ⓕ
Q6306	E-1	Ⓒ	Q6361	A-1	Ⓒ	IC6036	I-4	Ⓕ	TP6304	D-1	Ⓒ	P6103	H-3	Ⓒ
Q6306	E-1	Ⓕ	Q6361	A-1	Ⓕ	IC6037	I-4	Ⓕ	TP6304	D-1	Ⓕ	P6103	I-3	Ⓕ
Q6307	E-1	Ⓒ	Q6363	A-2	Ⓒ	IC6038	H-4	Ⓒ	TP6305	H-2	Ⓒ	P6301	H-1	Ⓒ
Q6307	E-1	Ⓕ	Q6364	A-2	Ⓒ	IC6039	I-4	Ⓒ	TP6305	H-2	Ⓕ	P6301	H-1	Ⓕ
Q6308	E-1	Ⓒ	Q6365	A-2	Ⓕ	IC6040	H-2	Ⓒ	TP6306	H-2	Ⓒ	P6302	G-1	Ⓒ
Q6308	E-1	Ⓕ	Q6366	A-2	Ⓕ	IC6041	I-4	Ⓕ	TP6306	H-2	Ⓕ	P6302	G-1	Ⓕ
Q6309	E-1	Ⓕ	Q6367	B-4	Ⓕ	IC6042	E-4	Ⓒ	TP6307	G-2	Ⓒ	P6303	G-1	Ⓒ
Q6310	D-1	Ⓕ	Q6368	B-4	Ⓒ	IC6043	E-4	Ⓒ	TP6307	G-2	Ⓕ	P6303	G-1	Ⓕ
Q6311	E-2	Ⓕ	Q6369	C-4	Ⓒ	IC6044	E-4	Ⓒ	TP6308	F-2	Ⓒ	P6304	F-1	Ⓒ
Q6312	E-2	Ⓒ	Q6370	C-4	Ⓕ	IC6045	G-3	Ⓕ	TP6308	F-2	Ⓕ	P6304	F-1	Ⓕ
Q6313	H-1	Ⓕ	Q6371	B-4	Ⓒ	IC6301	C-2	Ⓕ	TP6309	C-1	Ⓒ	P6305	B-1	Ⓒ
Q6314	H-1	Ⓒ	Q6371	B-4	Ⓕ	IC6302	C-2	Ⓕ	TP6309	C-1	Ⓕ	P6305	B-1	Ⓕ
Q6314	H-1	Ⓕ	Q6372	B-4	Ⓒ	IC6303	C-4	Ⓕ	TP6310	C-1	Ⓒ	P6306	B-1	Ⓒ
Q6315	H-1	Ⓒ	Q6372	B-4	Ⓕ	IC6304	B-3	Ⓕ	TP6310	C-1	Ⓕ	P6306	B-1	Ⓕ
Q6315	H-1	Ⓕ	Q6373	A-5	Ⓒ	IC6305	B-3	Ⓕ	TP6312	B-1	Ⓒ			
Q6316	H-1	Ⓒ	Q6373	A-5	Ⓕ	IC6306	B-2	Ⓒ	TP6312	B-1	Ⓕ	**Switches**		
Q6317	G-1	Ⓕ	Q6374	A-4	Ⓒ	IC6306	B-2	Ⓕ	TP6313	A-1	Ⓒ			
Q6318	G-1	Ⓒ	Q6374	A-4	Ⓕ	IC6307	B-2	Ⓕ	TP6313	B-1	Ⓕ	SW6301	C-4	Ⓒ
Q6318	G-1	Ⓕ	Q6375	A-5	Ⓕ	IC6308	B-3	Ⓕ	TP6314	B-4	Ⓒ	SW6301	C-4	Ⓕ
Q6319	G-1	Ⓒ	Q6376	B-2	Ⓕ	IC6309	A-2	Ⓕ	TP6314	B-4	Ⓕ	SW6302	C-4	Ⓒ
Q6319	G-1	Ⓕ	Q6377	B-2	Ⓕ	IC6310	A-2	Ⓕ	TP6315	A-3	Ⓒ	SW6302	C-4	Ⓕ
Q6320	H-1	Ⓕ	Q6378	B-3	Ⓒ	IC6311	A-3	Ⓕ	TP6315	B-3	Ⓕ	SW6303	C-4	Ⓒ
Q6321	H-2	Ⓕ	Q6379	B-3	Ⓕ	IC6312	C-4	Ⓕ	TP6316	D-4	Ⓒ	SW6303	C-4	Ⓕ
Q6322	H-1	Ⓕ	Q6380	D-4	Ⓕ	IC6312			TP6316	D-4	Ⓕ	SW6304	C-4	Ⓒ
Q6323	H-1	Ⓕ	Q6381	C-2	Ⓒ	IC6313	B-3	Ⓒ	TP6317	D-4	Ⓒ	SW6304	C-4	Ⓕ
Q6324	G-1	Ⓕ	Q6382	C-2	Ⓕ	IC6313	B-3	Ⓕ	TP6317	D-4	Ⓕ	SW6305	C-4	Ⓒ
Q6325	F-1	Ⓒ	Q6383	C-2	Ⓒ	IC6314	C-2	Ⓒ	TP6318	D-3	Ⓒ	SW6305	C-4	Ⓕ
Q6325	F-1	Ⓕ	Q6383	C-2	Ⓕ	IC6314	C-2	Ⓕ	TP6318	D-3	Ⓕ	SW6306	C-3	Ⓒ
Q6326	F-1	Ⓒ	Q6384	D-3	Ⓒ	IC6315	C-1	Ⓒ	TP6319	C-3	Ⓒ	SW6306	C-3	Ⓕ
Q6326	F-1	Ⓕ	Q6385	C-3	Ⓕ	IC6315	B-1	Ⓕ	TPG6001	I-1	Ⓒ	SW6307	C-4	Ⓒ
Q6327	G-1	Ⓕ	Q6391	E-3	Ⓒ	IC6316	A-4	Ⓕ	TPG6001	I-2	Ⓕ	SW6307	C-4	Ⓕ
Q6328	G-1	Ⓕ	Q6392	D-3	Ⓒ	IC6317	A-4	Ⓒ	TPG6301	I-1	Ⓒ	SW6308	C-4	Ⓒ
Q6329	G-1	Ⓕ	Q6400	B-4	Ⓕ	IC6318	B-4	Ⓒ	TPG6301	I-2	Ⓕ	SW6308	C-4	Ⓕ
Q6330	G-1	Ⓕ	**Integrated Circuits**			IC6318	B-4	Ⓕ	TPG6302	D-2	Ⓒ	SW6309	A-3	Ⓒ
Q6331	F-1	Ⓕ	IC6001	H-3	Ⓒ	IC6319	B-4	Ⓒ	TPG6302	D-2	Ⓕ	SW6309	A-4	Ⓕ
Q6332	F-1	Ⓒ	IC6003	I-3	Ⓒ	IC6319	B-4	Ⓕ	TPG6303	E-5	Ⓒ	SW6310	B-4	Ⓒ
Q6332	F-1	Ⓕ	IC6003	I-3	Ⓕ	IC6320	C-2	Ⓕ	TPG6303	E-5	Ⓕ	SW6310	B-4	Ⓕ
			IC6004	H-4	Ⓕ	IC6321	D-4	Ⓒ	TPG6305	C-3	Ⓒ			

ADDRESS INFORMATION
Ⓒ... COMPONENT SIDE
Ⓕ... FOIL SIDE

TC/CUE (S3 SUB) P.C. BOARD (VEP86124A) (FOR NTSC)
(VEP86124B) (FOR PAL)

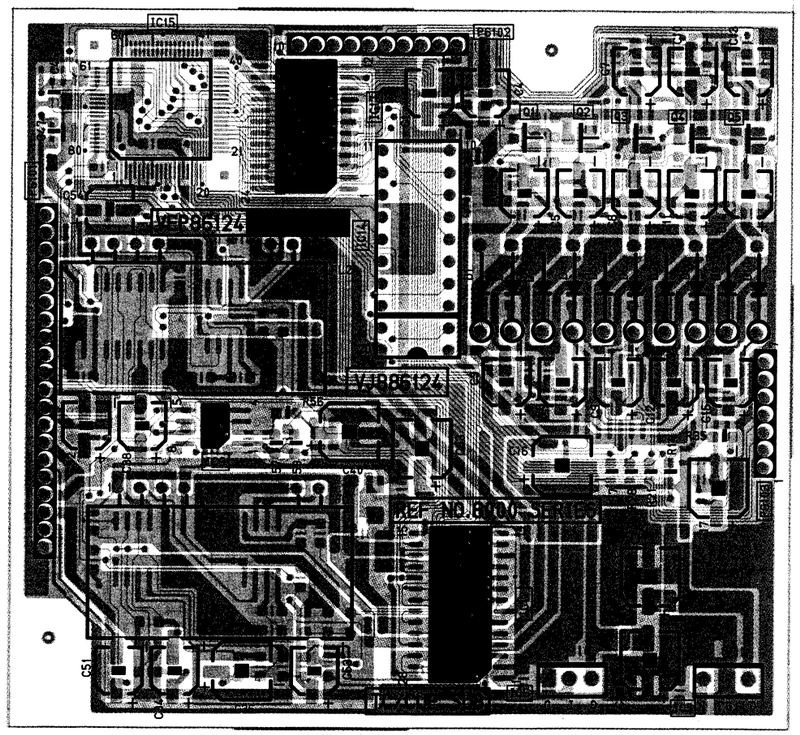

COMPONENT SIDE

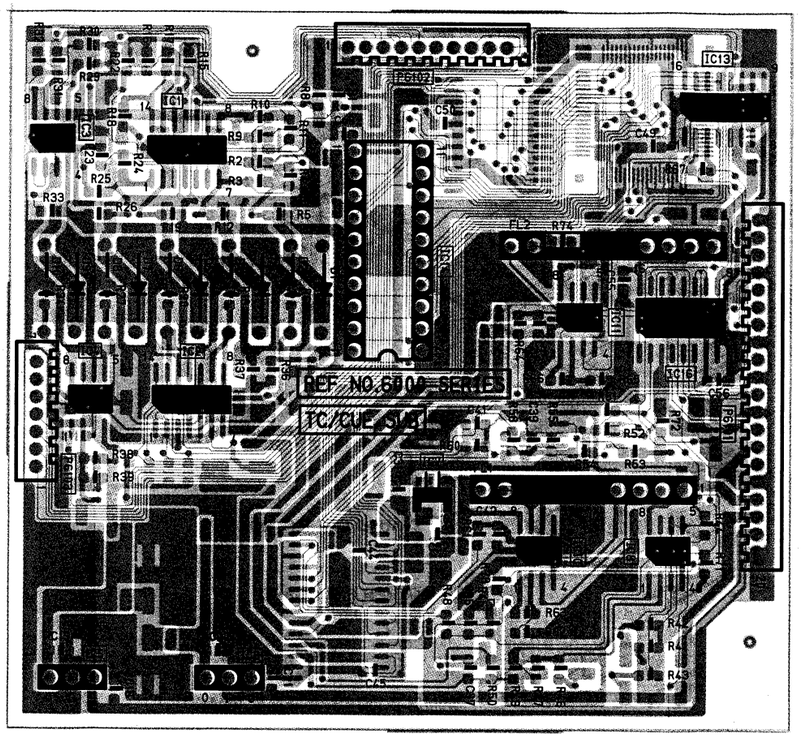

FOIL SIDE

TC/CUE SUB (S3 SUB)		
Transistors		
Q6001	B-2	©
Q6002	B-2	©
Q6003	B-2	©
Q6004	B-2	©
Q6005	B-2	©
Integrated Circuits		
IC6001	B-3	Ⓕ
IC6002	A-3	Ⓕ
IC6003	B-3	Ⓕ
IC6004	B-3	Ⓕ
IC6005	A-2	©
IC6005	A-3	Ⓕ
IC6006	A-2	©
IC6006	A-3	Ⓕ
IC6007	A-3	Ⓕ
IC6008	A-4	Ⓕ
IC6009	A-1	Ⓕ
IC6010	A-4	Ⓕ
IC6011	B-4	Ⓕ
IC6012	A-2	©
IC6013	B-4	Ⓕ
IC6014	B-2	©
IC6014	B-3	Ⓕ
IC6015	B-1	©
IC6016	B-4	Ⓕ
IC6017	B-1	©
Connectors		
P6101	B-1	©
P6101	A-4	Ⓕ
P6102	B-2	©
P6102	B-3	Ⓕ
P6103	A-2	©
P6103	A-3	Ⓕ

ADDRESS INFORMATION
© ... COMPONENT SIDE
Ⓕ ... FOIL SIDE

4—3—7

CIRCUIT BOARD LOCATION

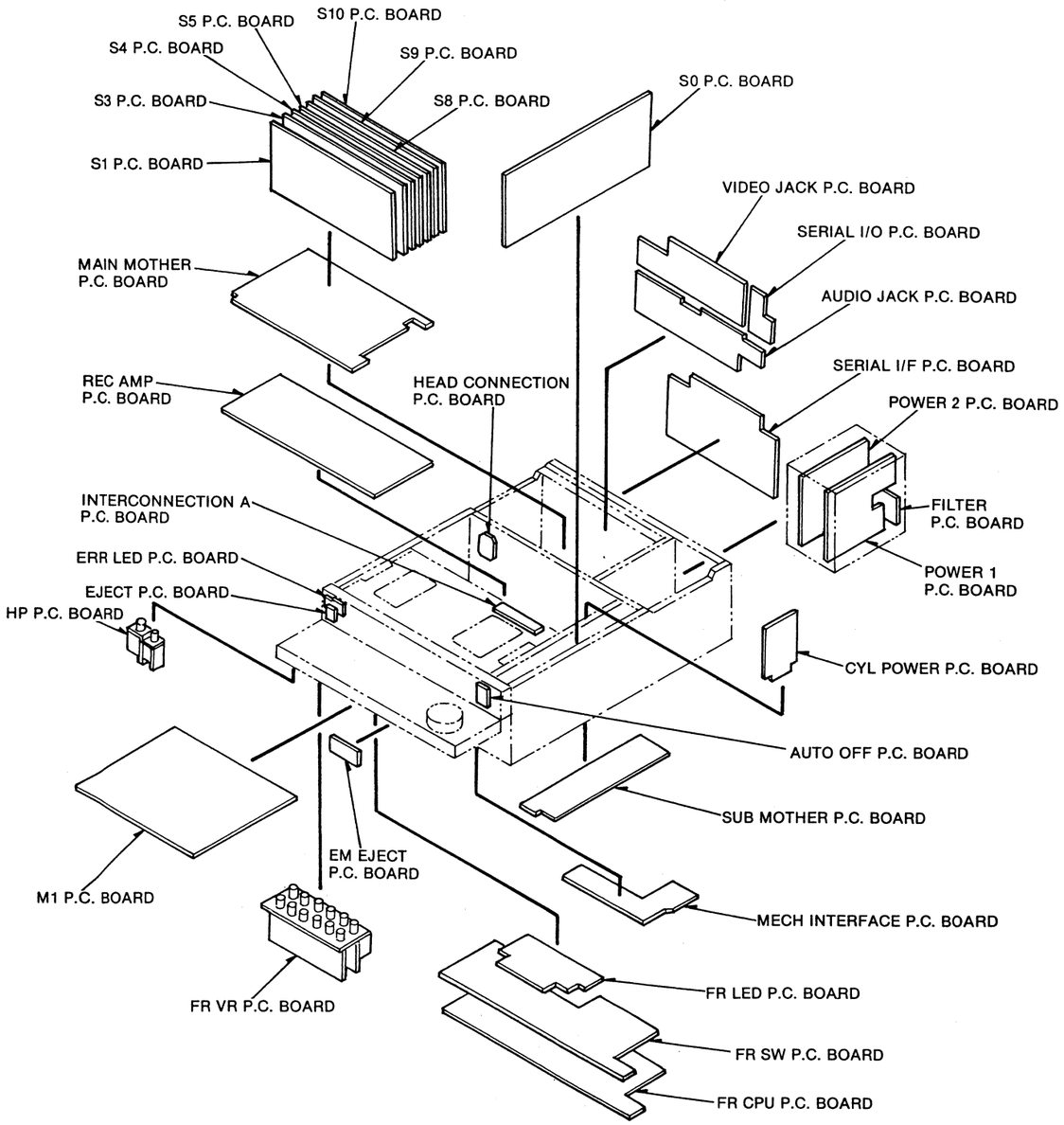

SERVO/AT (S4)

Transistors			IC2109	D-2	©	TP2003	C-1	Ⓕ
Q2001	D-1	Ⓕ	IC2110	F-3	©	TP2004	E-1	©
Q2101	G-3	Ⓕ	IC2113	G-4	©	TP2004	E-1	Ⓕ
Q2102	F-4	Ⓕ	IC2115	E-4	©	TP2005	C-1	©
Q2103	F-3	Ⓕ	IC2117	F-4	©	TP2002	C-1	Ⓕ
Q2104	F-4	Ⓕ	IC2121	E-3	©	TP2101	E-2	©
Q2105	F-3	Ⓕ	IC2125	F-3	©	TP2101	E-2	Ⓕ
Q2106	G-4	Ⓕ	IC2135	E-4	©	TP2102	E-2	©
Q2107	D-3	Ⓕ	IC2136	E-4	©	TP2102	E-2	Ⓕ
Q2108	D-3	Ⓕ	IC2147	D-3	©	TP2103	F-2	©
Q2109	E-2	Ⓕ	IC2149	E-3	©	TP2103	F-2	Ⓕ
Q2110	E-3	Ⓕ	IC2153	E-3	©	TP2104	F-2	©
Q2111	E-3	Ⓕ	IC2157	G-4	©	TP2104	F-2	Ⓕ
Q2112	E-3	Ⓕ	IC2158	H-4	©	TP2105	F-1	©
Q2113	E-3	Ⓕ	IC2169	G-3	©	TP2105	F-1	Ⓕ
Q2114	H-3	©	IC2171	F-2	©	TP2106	F-1	©
Q2115	H-3	©	IC2175	G-3	©	TP2106	G-1	Ⓕ
Q2116	H-3	©	IC2301	E-4	©	TP2303	B-1	©
Q2117	H-3	©	IC2304	D-4	©	TP2303	B-1	Ⓕ
Q2118	H-4	©	IC2306	D-4	©	TP2304	A-3	©
Q2119	G-3	©	IC2307	D-4	©	TP2304	A-3	Ⓕ
Q2301	B-4	Ⓕ	IC2310	B-4	©	TP2305	A-3	©
Q2302	C-4	Ⓕ	IC2311	C-4	©	TP2305	A-3	Ⓕ
Q2303	C-4	Ⓕ	IC2312	B-3	©	TP2401	B-1	©
Q2304	C-4	Ⓕ	IC2313	B-4	©	TP2401	B-1	Ⓕ
Q2305	C-4	Ⓕ	IC2317	C-3	©	TP2402	B-1	©
Q2306	B-4	Ⓕ	IC2318	B-3	©	TP2402	B-1	Ⓕ
Q2307	B-4	Ⓕ	IC2401	D-2	©	TP2403	B-1	©
Q2308	B-4	Ⓕ	IC2405	C-3	©	TP2403	B-1	Ⓕ
Q2309	C-3	Ⓕ	IC2409	C-2	©	TP2404	A-2	©
Q2310	C-3	Ⓕ	IC2413	C-2	©	TP2404	A-2	Ⓕ
Q2311	C-3	Ⓕ	IC2417	A-3	©	TP2501	H-2	©
			IC2421	B-3	©	TP2501	H-2	Ⓕ
Integrated Circuits			IC2422	C-3	©	TP2502	H-2	©
IC2001	H-2	©	IC2423	C-3	©	TP2502	H-2	Ⓕ
IC2002	I-2	©	IC2424	A-2	©	TP2601	A-1	©
IC2003	G-1	©	IC2425	A-3	©	TP2601	A-1	Ⓕ
IC2003	G-1	Ⓕ	IC2426	B-2	©	TP2602	B-1	©
IC2007	G-2	©	IC2428	C-3	©	TP2602	B-1	Ⓕ
IC2009	G-3	©	IC2430	D-2	©	TP2603	C-1	©
IC2011	H-3	©	IC2432	C-3	©	TP2603	C-1	Ⓕ
IC2012	H-2	Ⓕ	IC2433	B-2	©	TPG2001	A-1	©
IC2014	I-2	Ⓕ	IC2501	G-3	©	TPG2001	A-1	Ⓕ
IC2018	H-3	©	IC2601	C-1	©	TPG2002	I-2	©
IC2019	I-3	©	IC2603	A-2	©	TPG2002	I-2	Ⓕ
IC2020	I-4	©	IC2603	A-2	Ⓕ	TPG2003	I-5	©
IC2021	H-4	©	IC2604	A-1	©	TPG2003	I-5	Ⓕ
IC2024	H-4	©	IC2604	A-1	Ⓕ			
IC2027	G-2	©	IC2605	B-2	©	**Connectors**		
IC2031	G-2	©	IC2701	A-4	Ⓕ	P2004	H-2	©
IC2033	F-2	©	IC2702	A-4	Ⓕ	P2004	H-2	Ⓕ
IC2034	H-2	©	IC2703	A-4	Ⓕ	P2005	H-2	©
IC2035	F-2	©	IC2704	A-4	Ⓕ	P2005	H-2	Ⓕ
IC2036	G-2	©	IC2705	A-4	Ⓕ	P2006	C-2	©
IC2040	E-1	©	IC2706	B-4	Ⓕ	P2006	C-2	Ⓕ
IC2040	E-1	Ⓕ	IC2707	B-4	Ⓕ	P207	G-5	©
IC2041	E-2	©	IC2708	B-4	Ⓕ	P207	G-5	Ⓕ
IC2042	E-2	©	IC2709	B-3	Ⓕ	P208	C-5	©
IC2045	F-1	©				P208	C-5	Ⓕ
IC2046	D-1	©	**Test Points**					
IC2050	E-2	©	TP2001	F-1	©	**Switches**		
IC2051	D-2	©	TP2001	F-1	Ⓕ	SW2001	G-1	©
IC2052	E-2	Ⓕ	TP2002	C-1	©	SW2001	G-1	Ⓕ
IC2101	F-4	©	TP2002	C-1	Ⓕ			
IC2102	G-4	©	TP2003	C-1	©			

ADDRESS INFORMATION
© ... COMPONENT SIDE
Ⓕ ... FOIL SIDE

REVERSE SIDE

TC/CUE SUB (S3 SUB)

4—3—8

SERVO/AT (S4) P.C. BOARD (VEP82093A) (FOR NTSC)
(VEP82093B) (FOR PAL)

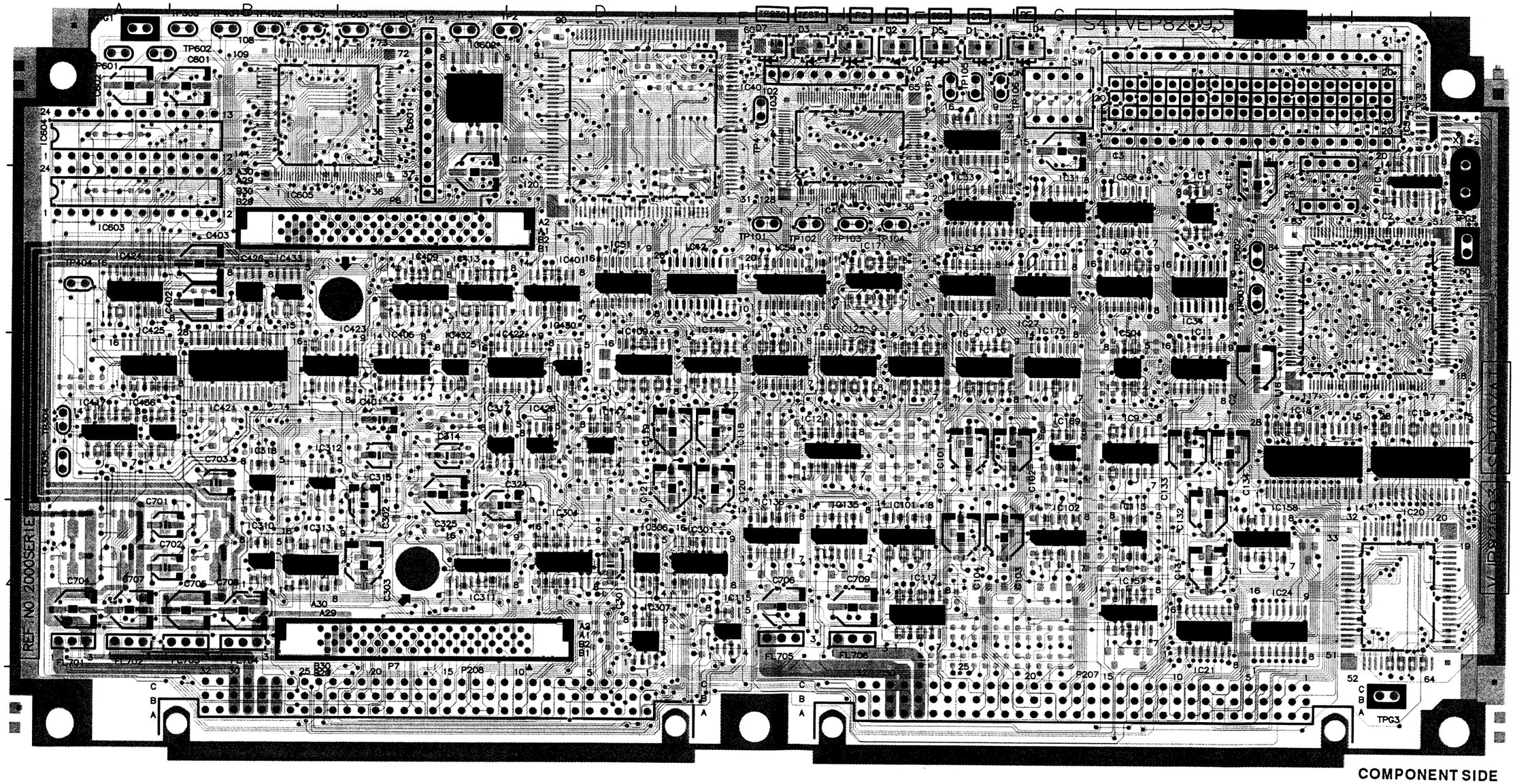

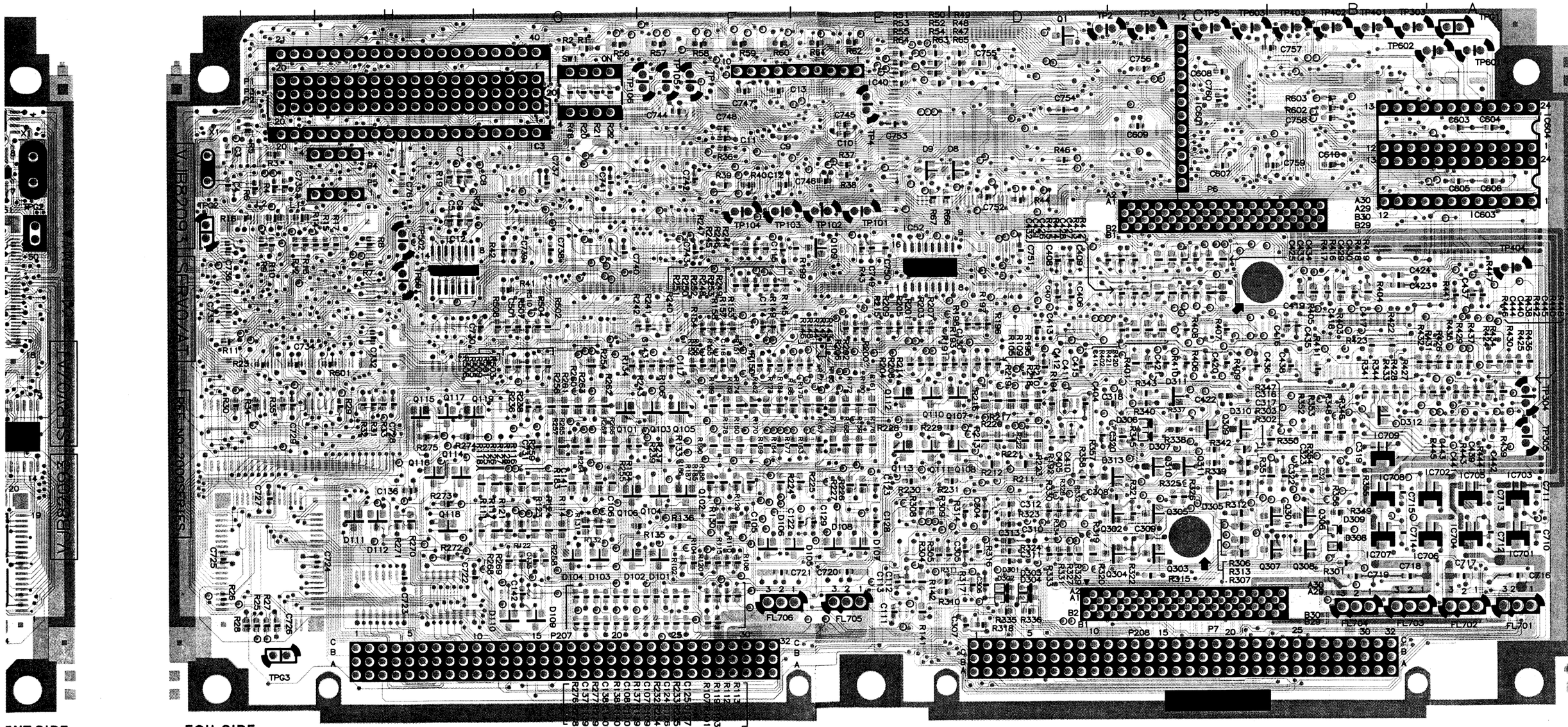

ENT SIDE

FOIL SIDE

SYSTEM CONTROL (S5) P.C. BOARD (VEP86125A) (FOR NTSC)
(VEP86125B) (FOR PAL)

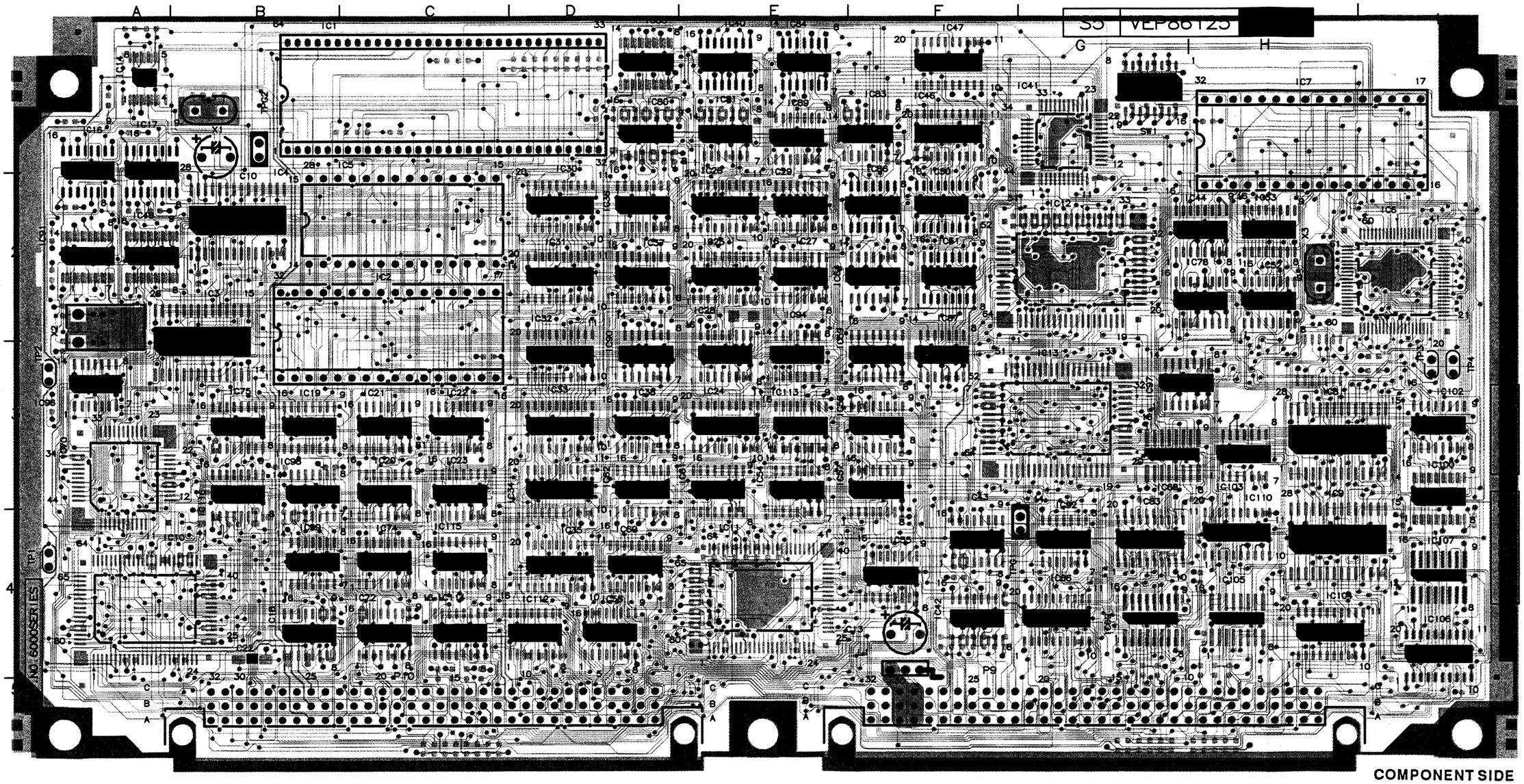

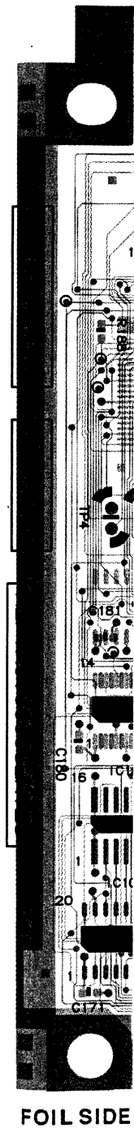

REVERSE SIDE

SERVO/AT (S4)

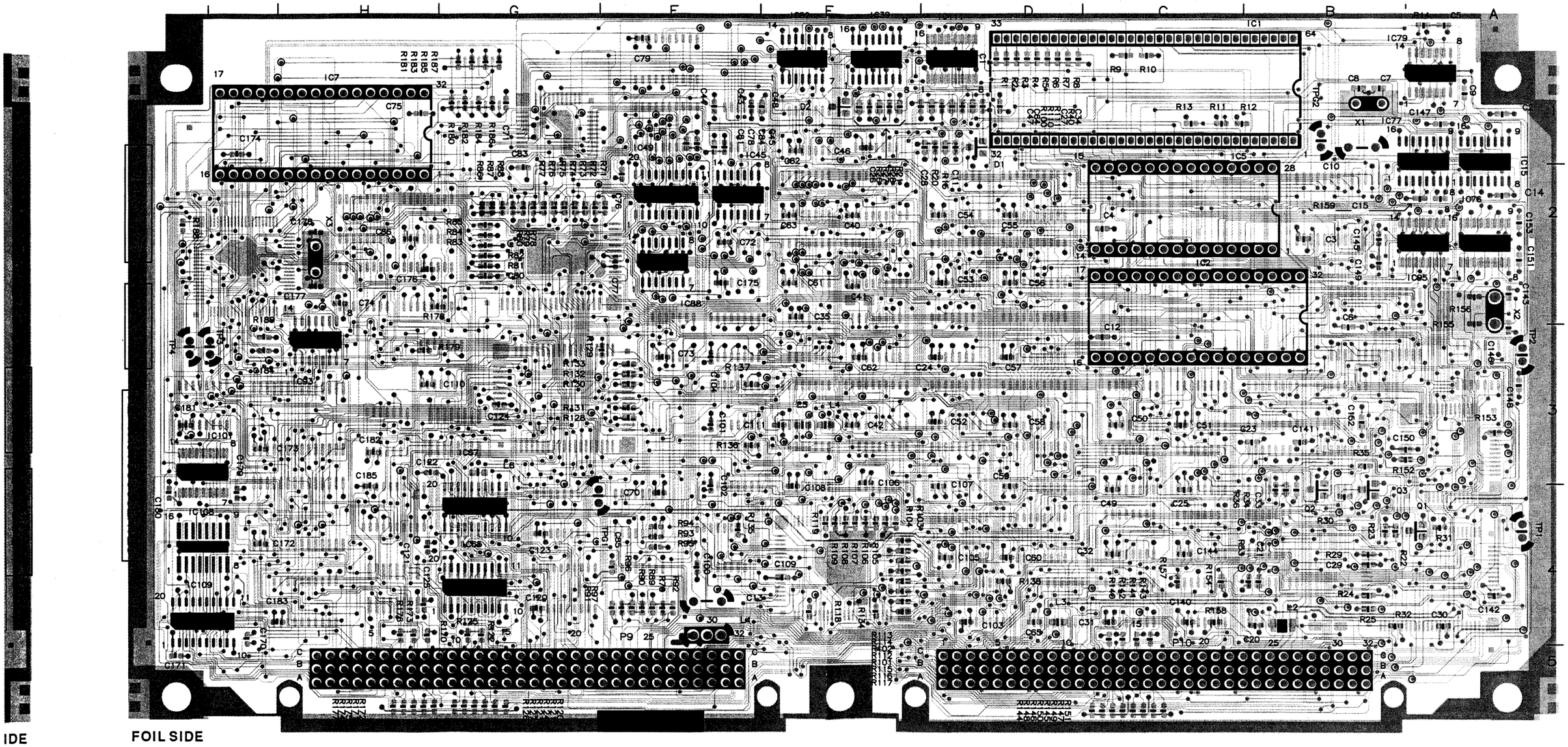

IDE

FOIL SIDE

AUDIO D/A (S8) P.C. BOARD (VEP84155A)

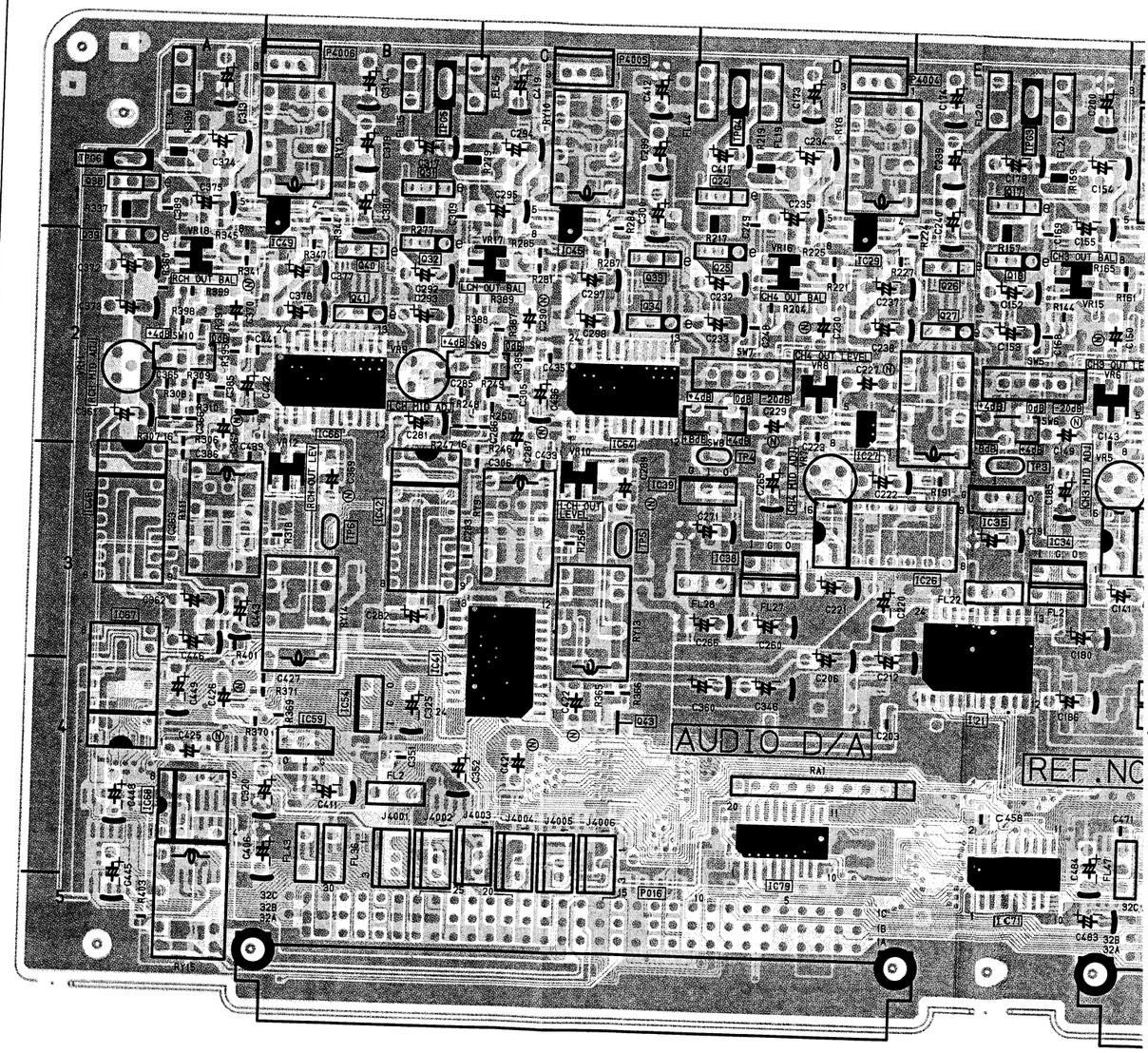

SYSTEM CONTROL (S5)

Transistors		
Q6001	A-4	Ⓕ
Q6002	B-4	Ⓕ
Q6003	B-4	Ⓕ

Integrated Circuits		
IC6001	B-1	Ⓒ
IC6001	B-1	Ⓕ
IC6002	C-2	Ⓒ
IC6002	C-2	Ⓕ
IC6003	B-2	Ⓒ
IC6004	B-2	Ⓒ
IC6005	C-2	Ⓒ
IC6005	C-2	Ⓕ
IC6006	I-2	Ⓒ
IC6007	H-1	Ⓒ
IC6007	H-1	Ⓕ
IC6008	H-3	Ⓒ
IC6009	H-4	Ⓒ
IC6010	A-4	Ⓒ
IC6011	E-4	Ⓒ
IC6012	G-2	Ⓒ
IC6013	G-3	Ⓒ
IC6014	A-1	Ⓒ
IC6015	A-1	Ⓕ
IC6016	A-1	Ⓒ
IC6017	A-1	Ⓒ
IC6018	B-4	Ⓒ
IC6019	B-3	Ⓒ
IC6020	C-3	Ⓒ
IC6021	C-3	Ⓒ
IC6022	C-3	Ⓒ
IC6023	C-3	Ⓒ
IC6024	E-3	Ⓒ
IC6025	E-2	Ⓒ
IC6026	E-2	Ⓒ
IC6027	E-2	Ⓒ
IC6028	E-2	Ⓒ
IC6029	E-2	Ⓒ
IC6030	D-2	Ⓒ
IC6031	D-2	Ⓒ
IC6032	D-2	Ⓒ
IC6033	D-3	Ⓒ
IC6034	D-3	Ⓒ
IC6035	D-4	Ⓒ
IC6036	D-2	Ⓒ
IC6037	D-2	Ⓒ
IC6038	D-3	Ⓒ
IC6039	E-1	Ⓕ
IC6040	E-1	Ⓒ
IC6041	G-1	Ⓒ
IC6042	F-4	Ⓒ
IC6043	F-4	Ⓒ
IC6044	H-2	Ⓒ
IC6045	F-2	Ⓕ
IC6046	F-1	Ⓒ
IC6047	F-1	Ⓒ
IC6048	A-2	Ⓒ
IC6049	F-2	Ⓕ
IC6050	F-1	Ⓒ
IC6051	F-2	Ⓒ
IC6052	H-2	Ⓒ
IC6053	H-2	Ⓒ
IC6054	E-3	Ⓒ
IC6055	F-4	Ⓒ
IC6056	F-3	Ⓒ
IC6057	F-3	Ⓒ
IC6058	D-4	Ⓒ
IC6059	F-3	Ⓒ
IC6060	D-4	Ⓒ
IC6061	E-3	Ⓒ
IC6062	D-3	Ⓒ
IC6063	G-4	Ⓒ
IC6064	F-2	Ⓒ
IC6065	G-4	Ⓕ
IC6066	G-4	Ⓒ
IC6067	G-4	Ⓕ
IC6068	G-3	Ⓒ
IC6069	G-4	Ⓒ
IC6070	A-3	Ⓒ
IC6072	C-4	Ⓒ
IC6074	C-4	Ⓒ
IC6075	B-3	Ⓒ
IC6076	A-2	Ⓕ
IC6077	B-1	Ⓕ
IC6078	H-2	Ⓒ
IC6079	A-1	Ⓕ
IC6080	D-1	Ⓒ
IC6081	E-1	Ⓒ
IC6082	E-1	Ⓕ
IC6083	F-1	Ⓒ
IC6084	E-1	Ⓒ
IC6085	D-1	Ⓒ
IC6086	F-2	Ⓒ
IC6087	F-3	Ⓒ
IC6088	F-2	Ⓕ
IC6089	E-1	Ⓒ
IC6090	D-3	Ⓒ
IC6091	A-2	Ⓒ
IC6092	G-4	Ⓒ
IC6093	H-3	Ⓕ
IC6094	E-2	Ⓒ
IC6095	A-2	Ⓕ
IC6096	A-3	Ⓒ
IC6097	G-3	Ⓒ
IC6098	B-3	Ⓒ
IC6099	B-4	Ⓒ
IC6100	I-3	Ⓒ
IC6101	I-3	Ⓕ
IC6102	I-3	Ⓒ
IC6103	H-3	Ⓒ
IC6104	H-4	Ⓒ
IC6105	H-4	Ⓒ
IC6106	I-4	Ⓒ
IC6107	I-4	Ⓒ
IC6108	I-4	Ⓕ
IC6109	I-4	Ⓕ
IC6110	H-4	Ⓒ
IC6111	D-1	Ⓕ
IC6112	D-4	Ⓒ
IC6113	E-3	Ⓒ
IC6114	C-4	Ⓒ
IC6115	C-4	Ⓒ
IC6116	B-3	Ⓒ

Test Points		
TP6001	A-4	Ⓒ
TP6001	A-4	Ⓕ
TP6002	A-3	Ⓒ
TP6002	A-3	Ⓕ
TP6003	I-3	Ⓒ
TP6003	I-3	Ⓕ
TP6004	I-3	Ⓒ
TP6004	I-3	Ⓕ
TPG6001	F-4	Ⓒ
TPG6001	F-4	Ⓕ
TPG6002	B-1	Ⓒ
TPG6002	B-1	Ⓕ

Connectors		
P009	F-5	Ⓒ
P009	F-5	Ⓕ
P010	C-5	Ⓒ
P010	C-5	Ⓕ

Switches		
SW6001	G-1	Ⓒ

ADDRESS INFORMATION
Ⓒ... COMPONENT SIDE
Ⓕ... FOIL SIDE

AUDIO D/A (S8)

Transistors		
Q4001	I-3	Ⓕ
Q4002	I-2	Ⓕ
Q4003	H-1	Ⓒ
Q4003	H-1	Ⓕ
Q4004	H-2	Ⓒ
Q4004	H-2	Ⓕ
Q4005	I-2	Ⓒ
Q4005	I-2	Ⓕ
Q4006	I-2	Ⓒ
Q4006	I-2	Ⓕ
Q4007	I-1	Ⓕ
Q4008	H-3	Ⓕ
Q4009	G-2	Ⓕ
Q4010	F-1	Ⓒ
Q4010	F-1	Ⓕ
Q4011	F-2	Ⓒ
Q4011	F-2	Ⓕ
Q4012	G-2	Ⓒ
Q4012	G-2	Ⓕ
Q4013	G-2	Ⓒ
Q4013	G-2	Ⓕ
Q4014	G-1	Ⓕ
Q4015	F-3	Ⓕ
Q4016	F-2	Ⓕ
Q4017	E-1	Ⓒ
Q4017	E-1	Ⓕ
Q4018	E-2	Ⓒ
Q4018	E-1	Ⓕ
Q4019	F-2	Ⓒ
Q4019	F-2	Ⓕ
Q4020	F-2	Ⓒ
Q4020	F-2	Ⓕ
Q4021	F-1	Ⓕ
Q4022	E-3	Ⓕ
Q4023	E-2	Ⓕ
Q4024	D-1	Ⓒ
Q4024	D-1	Ⓕ
Q4025	D-2	Ⓒ
Q4025	D-2	Ⓕ
Q4026	E-2	Ⓒ
Q4026	E-2	Ⓕ
Q4027	E-2	Ⓒ
Q4027	E-2	Ⓕ
Q4028	D-1	Ⓕ
Q4029	C-3	Ⓕ
Q4030	C-3	Ⓕ
Q4031	B-1	Ⓒ
Q4031	B-1	Ⓕ
Q4032	B-2	Ⓒ
Q4032	B-2	Ⓕ
Q4033	C-2	Ⓒ
Q4033	C-2	Ⓕ
Q4034	C-2	Ⓒ
Q4034	C-2	Ⓕ
Q4035	C-1	Ⓕ
Q4036	A-3	Ⓕ
Q4037	A-3	Ⓕ
Q4038	A-1	Ⓒ
Q4038	A-1	Ⓕ
Q4039	A-2	Ⓒ
Q4039	A-2	Ⓕ
Q4040	B-2	Ⓒ
Q4040	B-2	Ⓕ
Q4041	B-2	Ⓒ
Q4041	B-2	Ⓕ
Q4042	B-1	Ⓕ
Q4043	C-4	Ⓒ
Q4044	C-3	Ⓕ
Q4045	B-4	Ⓕ
Q4046	B-3	Ⓕ
Q4047	A-5	Ⓕ
Q4048	D-5	Ⓕ

Integrated Circuits		
IC4001	H-3	Ⓒ
IC4002	I-3	Ⓒ
IC4002	I-3	Ⓕ
IC4003	H-2	Ⓒ
IC4004	H-2	Ⓕ
IC4005	H-1	Ⓒ
IC4006	G-3	Ⓒ
IC4006	G-3	Ⓕ
IC4007	G-2	Ⓒ
IC4008	G-2	Ⓕ
IC4009	G-2	Ⓒ
IC4010	G-3	Ⓕ
IC4011	H-3	Ⓕ
IC4012	G-3	Ⓕ
IC4014	I-3	Ⓒ
IC4014	I-3	Ⓕ
IC4015	H-3	Ⓒ
IC4015	H-3	Ⓕ
IC4018	F-3	Ⓒ
IC4018	F-3	Ⓕ
IC4019	F-3	Ⓒ
IC4019	F-3	Ⓕ
IC4021	E-4	Ⓒ
IC4022	F-3	Ⓒ
IC4022	F-3	Ⓕ
IC4023	F-2	Ⓒ
IC4024	E-2	Ⓕ
IC4025	F-1	Ⓒ
IC4026	E-3	Ⓒ
IC4026	E-3	Ⓕ
IC4027	D-2	Ⓒ
IC4028	D-2	Ⓕ
IC4029	D-1	Ⓒ
IC4030	D-4	Ⓕ
IC4031	E-4	Ⓕ
IC4032	D-4	Ⓕ
IC4034	E-3	Ⓒ
IC4034	E-3	Ⓕ
IC4035	E-3	Ⓒ
IC4035	E-3	Ⓕ
IC4038	D-3	Ⓒ
IC4038	D-3	Ⓕ
IC4039	C-3	Ⓒ
IC4039	D-3	Ⓕ
IC4041	B-3	Ⓒ
IC4042	B-3	Ⓒ
IC4042	B-3	Ⓕ
IC4043	C-2	Ⓕ
IC4044	C-2	Ⓕ
IC4045	C-1	Ⓒ
IC4046	A-3	Ⓒ
IC4046	A-3	Ⓕ
IC4047	A-2	Ⓕ
IC4048	B-2	Ⓕ
IC4049	B-1	Ⓒ
IC4050	D-4	Ⓕ
IC4051	B-4	Ⓕ
IC4052	D-4	Ⓕ
IC4054	B-4	Ⓒ
IC4054	B-4	Ⓕ
IC4059	B-4	Ⓒ
IC4059	B-4	Ⓕ
IC4061	C-4	Ⓕ
IC4062	B-4	Ⓕ
IC4063	C-2	Ⓕ
IC4064	C-2	Ⓒ
IC4065	A-2	Ⓕ
IC4066	B-2	Ⓒ
IC4067	A-3	Ⓒ
IC4067	A-4	Ⓕ
IC4068	A-4	Ⓒ
IC4068	A-4	Ⓕ
IC4069	A-3	Ⓕ
IC4070	F-4	Ⓒ
IC4070	F-4	Ⓕ
IC4071	E-4	Ⓒ
IC4072	G-4	Ⓕ
IC4073	G-4	Ⓒ
IC4074	G-4	Ⓕ
IC4075	G-4	Ⓒ
IC4076	G-4	Ⓒ
IC4077	D-4	Ⓕ
IC4078	D-4	Ⓕ
IC4079	D-4	Ⓒ
IC4081	H-4	Ⓒ
IC4082	H-4	Ⓕ
IC4083	I-4	Ⓒ
IC4084	I-4	Ⓕ
IC4085	I-4	Ⓒ
IC4086	I-4	Ⓕ
IC4087	I-5	Ⓕ
IC4088	I-5	Ⓕ
IC4089	I-4	Ⓒ
IC4090	H-4	Ⓒ
IC4091	H-4	Ⓕ
IC4092	H-4	Ⓒ
IC4093	H-4	Ⓒ

Test Points		
TP4001	H-2	Ⓒ
TP4001	H-2	Ⓕ
TP4002	F-3	Ⓒ
TP4002	F-3	Ⓕ
TP4003	E-2	Ⓒ
TP4003	E-2	Ⓕ
TP4004	D-2	Ⓒ
TP4004	D-2	Ⓕ
TP4005	C-3	Ⓒ
TP4005	C-3	Ⓕ
TP4006	B-3	Ⓒ
TP4006	B-3	Ⓕ
TPG4001	H-1	Ⓒ
TPG4001	H-1	Ⓕ
TPG4002	F-1	Ⓒ
TPG4002	F-1	Ⓕ
TPG4003	E-1	Ⓒ
TPG4003	E-1	Ⓕ
TPG4004	D-1	Ⓒ
TPG4004	D-1	Ⓕ
TPG4005	B-1	Ⓒ
TPG4005	B-1	Ⓕ
TPG4006	A-1	Ⓒ
TPG4006	A-1	Ⓕ

Adjustments		
VR4001	H-3	Ⓒ
VR4001	H-3	Ⓕ
VR4002	H-2	Ⓒ
VR4003	G-2	Ⓒ
VR4003	G-3	Ⓕ
VR4004	G-2	Ⓒ
VR4005	E-2	Ⓒ
VR4005	F-3	Ⓕ
VR4006	E-2	Ⓒ
VR4007	D-2	Ⓒ
VR4007	D-3	Ⓕ
VR4008	D-2	Ⓒ
VR4009	B-2	Ⓒ
VR4009	B-2	Ⓕ
VR4010	C-3	Ⓒ
VR4011	A-2	Ⓒ
VR4011	A-2	Ⓕ
VR4012	B-2	Ⓒ
VR4013	H-2	Ⓒ
VR4014	G-2	Ⓒ
VR4015	E-2	Ⓒ
VR4016	D-2	Ⓒ
VR4017	C-2	Ⓒ
VR4018	A-2	Ⓒ

Connectors		
P015	G-5	Ⓒ
P015	H-5	Ⓕ
P016	C-5	Ⓒ
P016	C-5	Ⓕ
P4001	I-1	Ⓒ
P4001	H-1	Ⓕ
P4002	G-1	Ⓒ
P4002	G-1	Ⓕ
P4003	F-1	Ⓒ
P4003	F-1	Ⓕ
P4004	D-1	Ⓒ
P4004	D-1	Ⓕ
P4005	C-1	Ⓒ
P4005	C-1	Ⓕ
P4006	B-1	Ⓒ
P4006	B-1	Ⓕ

Switches		
SW4001	H-2	Ⓒ
SW4001	H-2	Ⓕ
SW4002	H-2	Ⓒ
SW4002	H-2	Ⓕ
SW4003	G-2	Ⓒ
SW4003	F-2	Ⓕ
SW4004	F-2	Ⓒ
SW4004	F-2	Ⓕ
SW4005	E-2	Ⓒ
SW4005	E-2	Ⓕ
SW4006	E-2	Ⓒ
SW4006	E-2	Ⓕ
SW4007	D-2	Ⓒ
SW4007	D-2	Ⓕ
SW4008	D-2	Ⓒ
SW4008	D-2	Ⓕ
SW4009	C-2	Ⓒ
SW4009	C-2	Ⓕ
SW4010	A-2	Ⓒ
SW4010	A-2	Ⓕ

ADDRESS INFORMATION
Ⓒ... COMPONENT SIDE
Ⓕ... FOIL SIDE

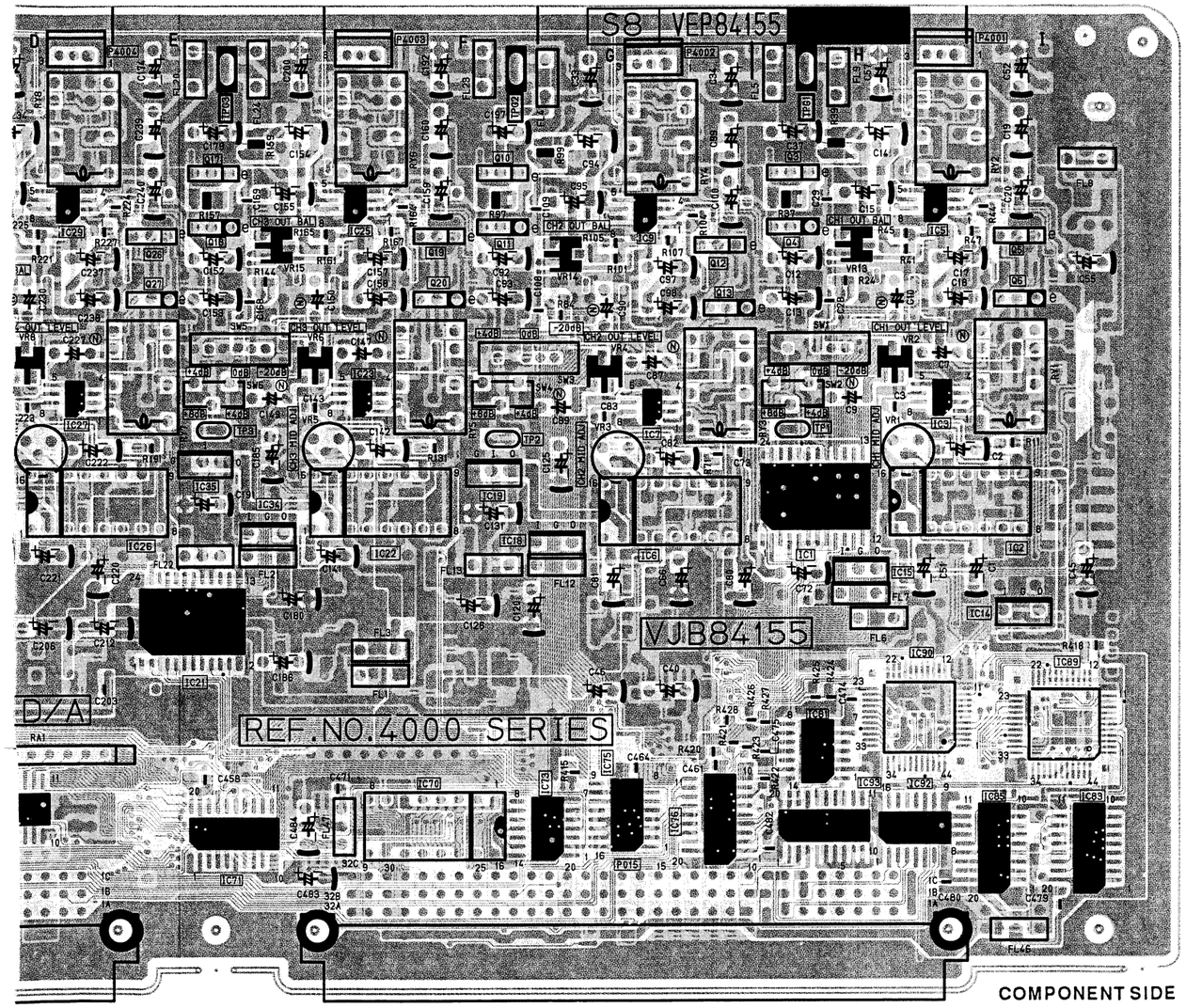

COMPONENT SIDE

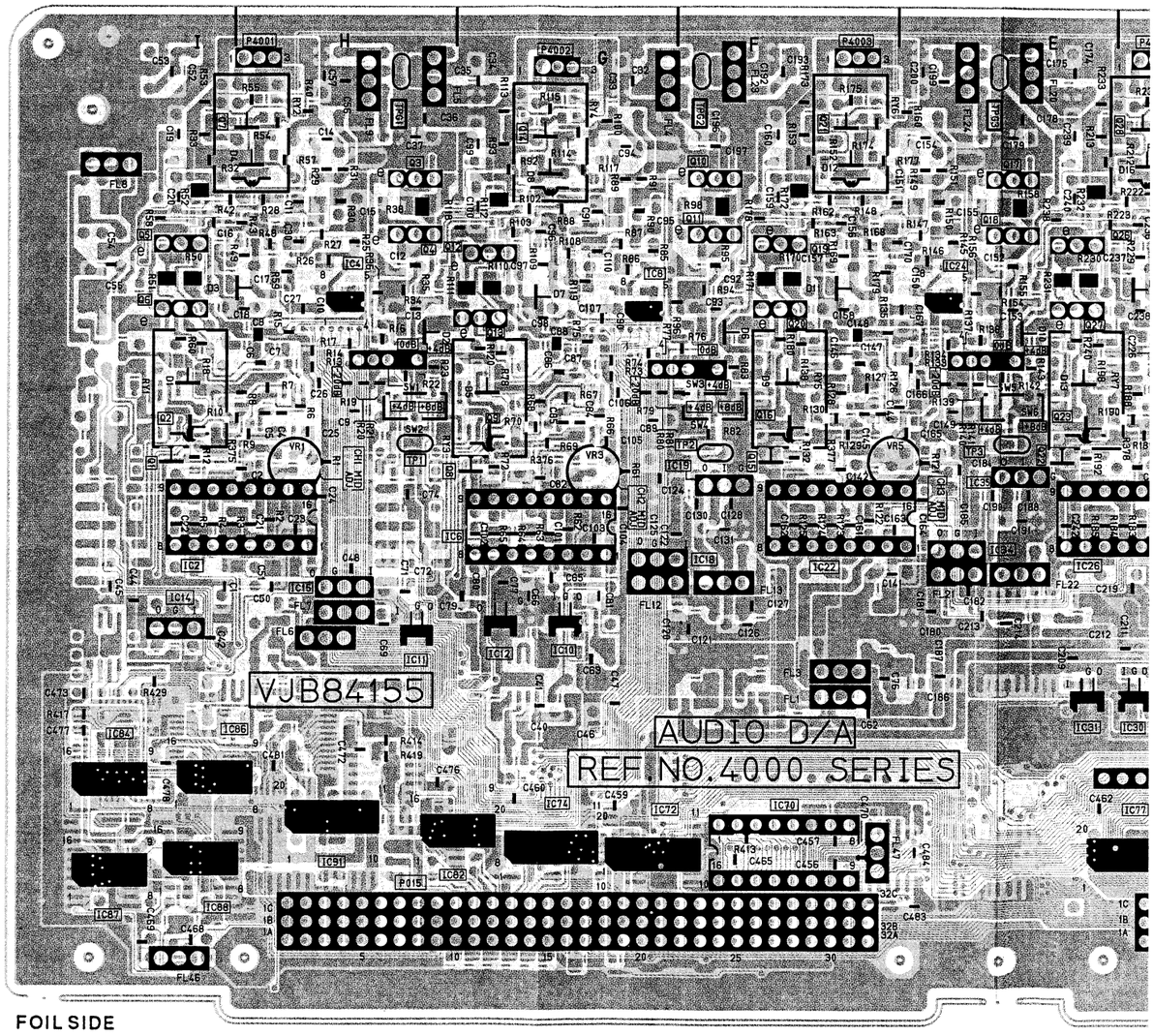

FOIL SIDE

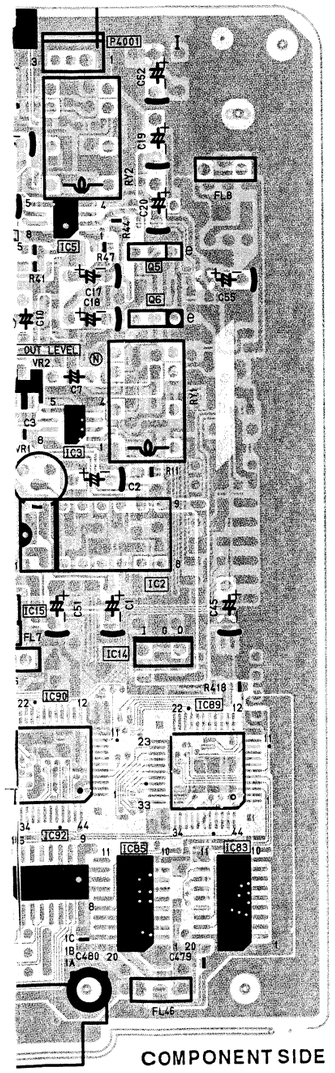

COMPONENT SIDE

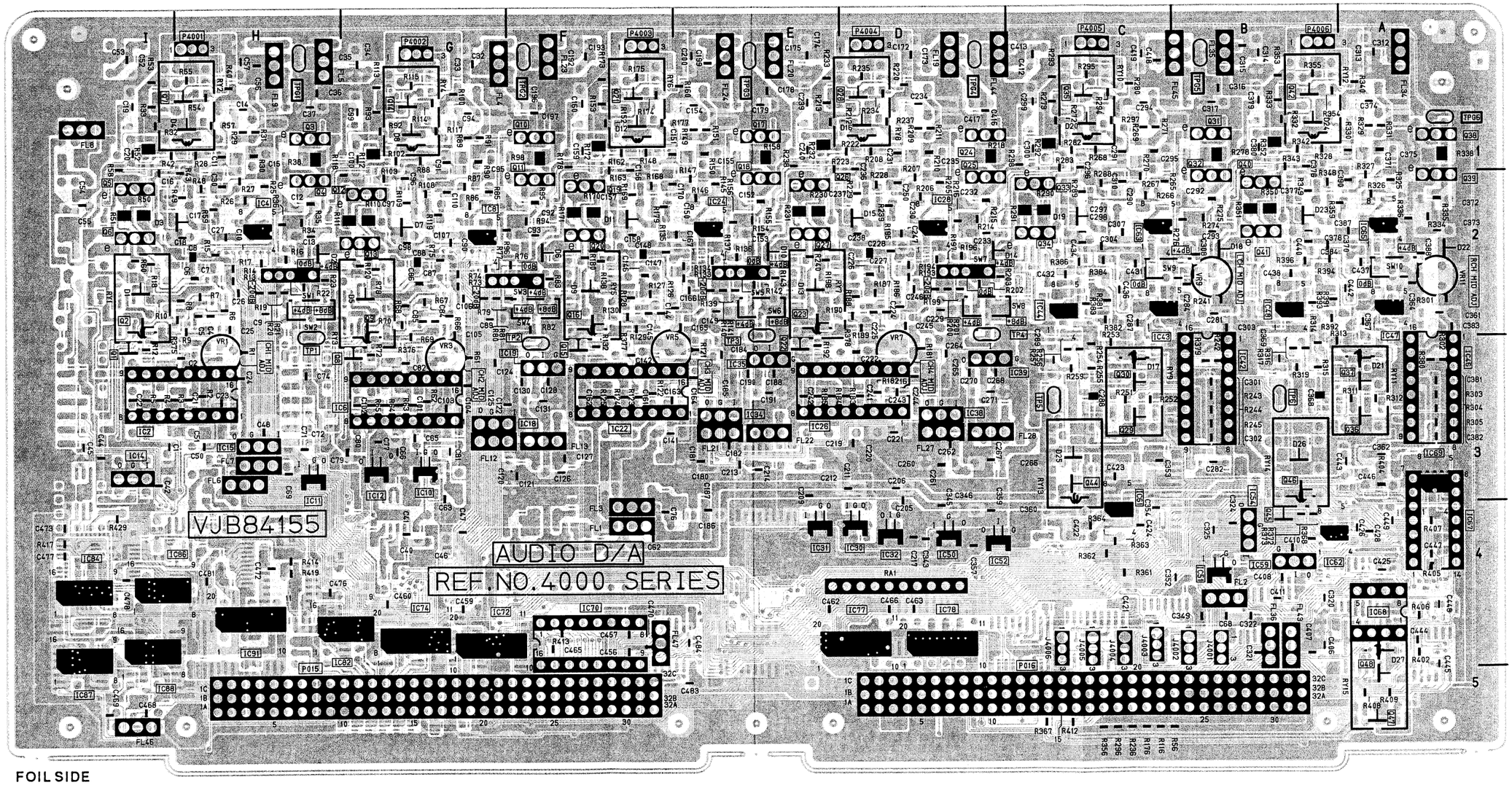

FOIL SIDE

REVERSE SIDE
AUDIO A/D (S9)

AUDIO D/A (S9) P.C. BOARD (VEP84156A)

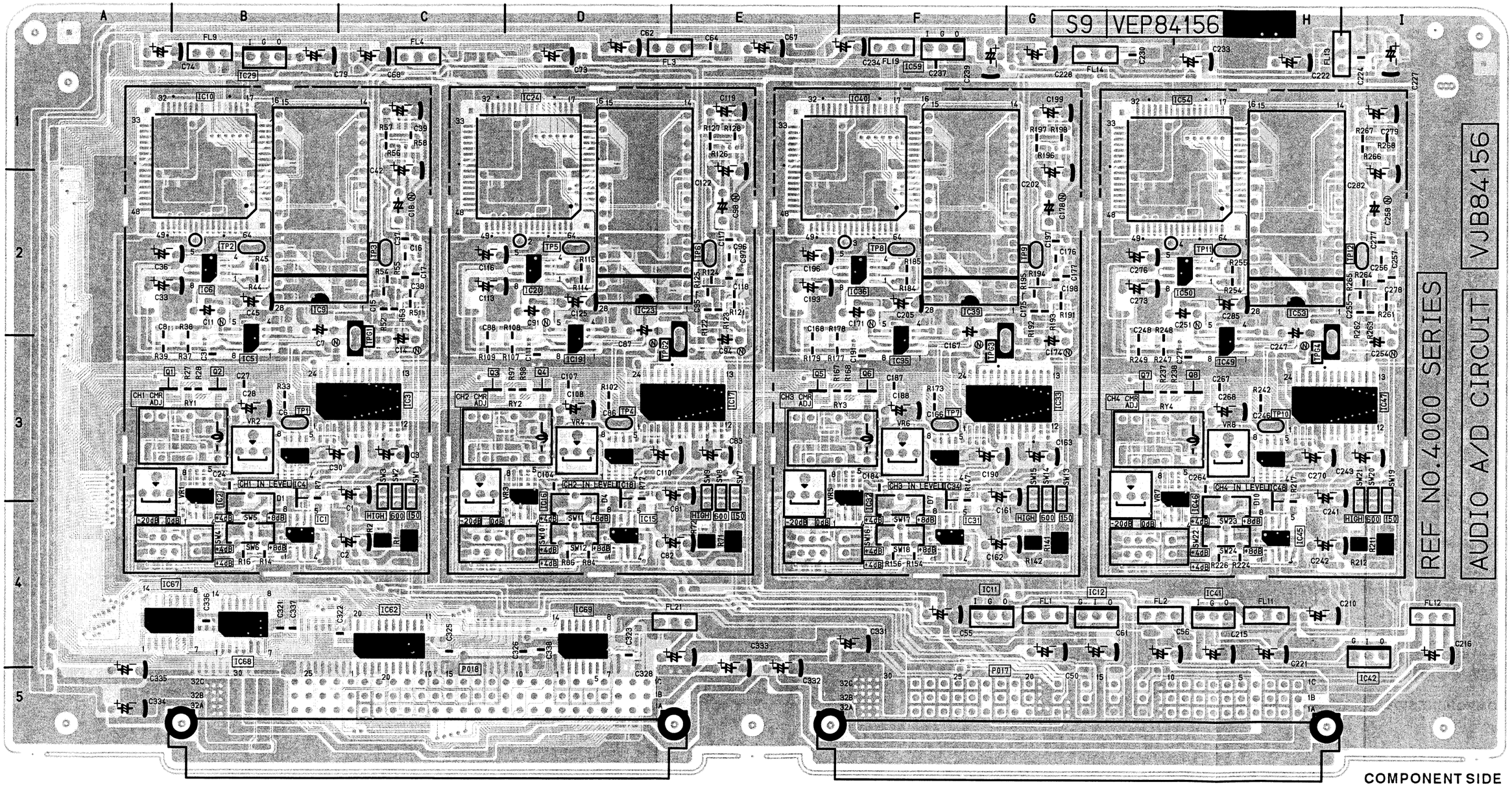

COMPONENT SIDE

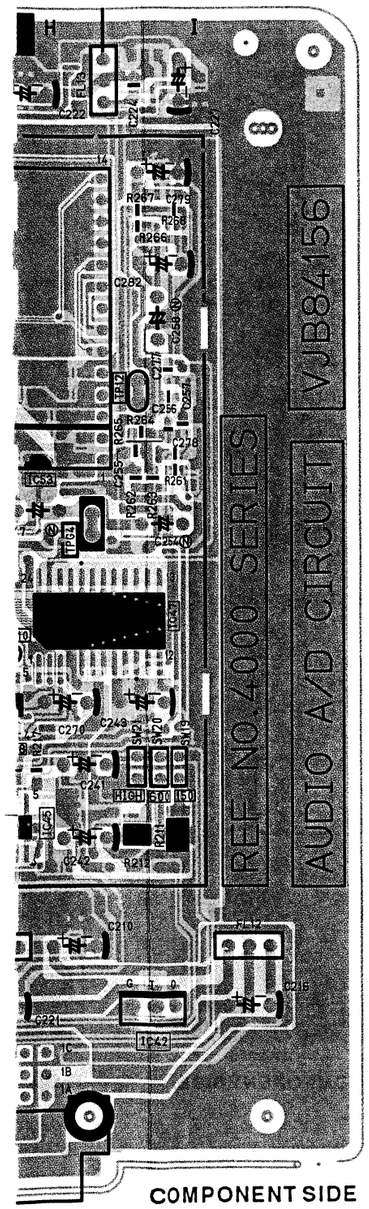

COMPONENT SIDE

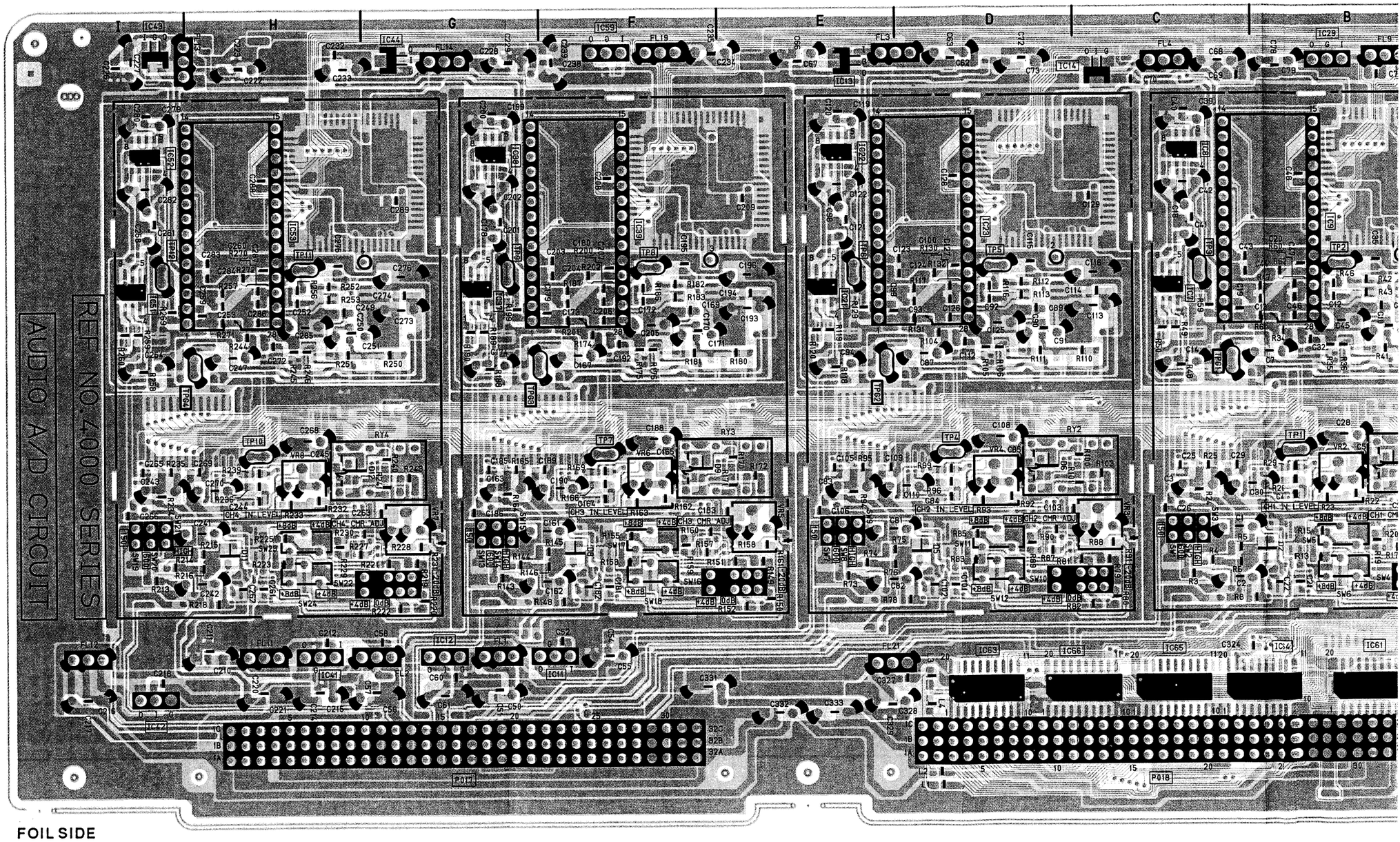

FOIL SIDE

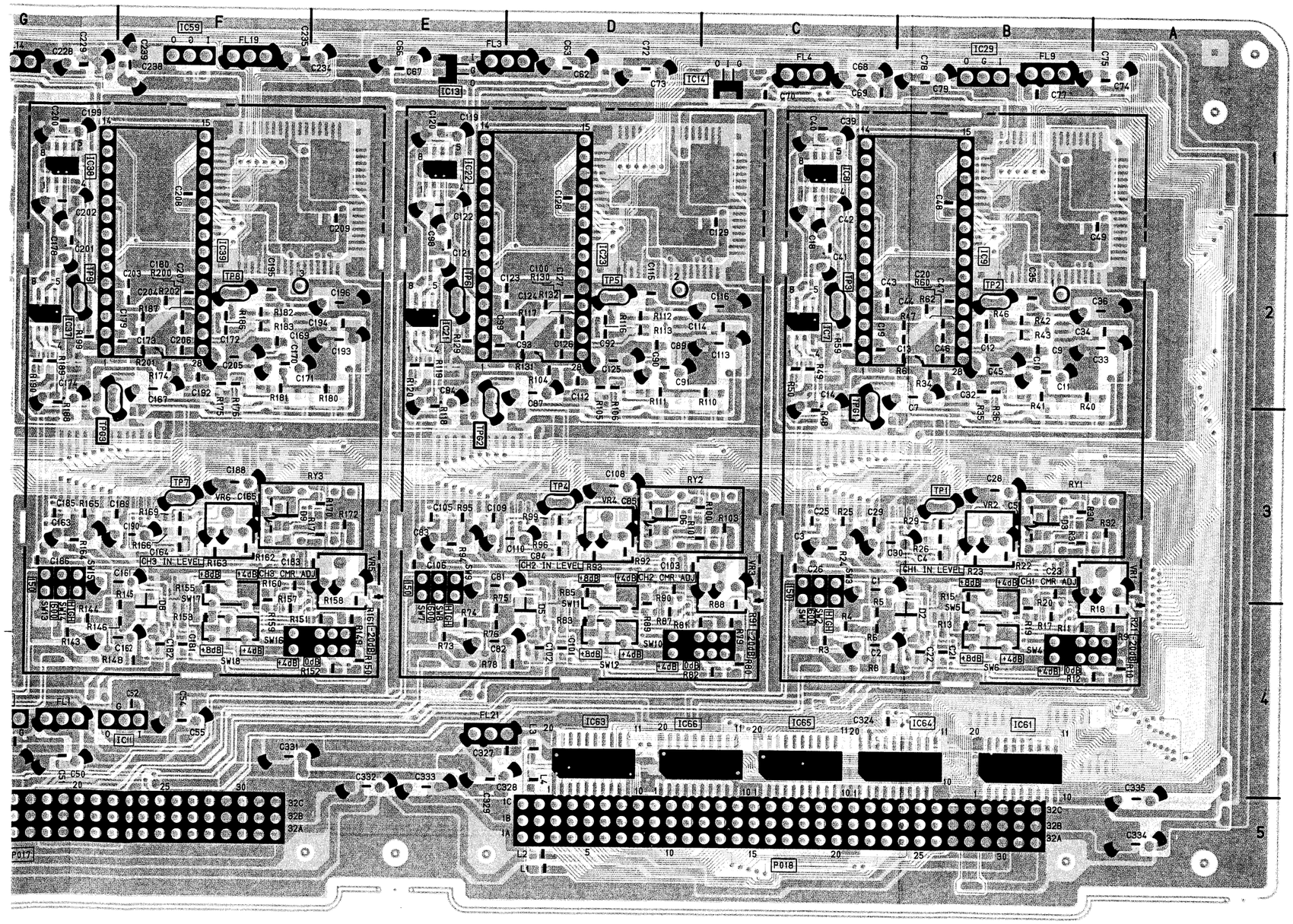

AUDIO A/D (S9)							
Transistors			IC4050	H-2 ©		VR4006	F-3 ©
Q4001	A-3 ©		IC4051	I-2 Ⓕ		VR4006	F-3 Ⓕ
Q4002	B-3 ©		IC4052	I-1 Ⓕ		VR4007	G-3 ©
Q4003	C-3 ©		IC4053	H-2 ©		VR4007	G-3 Ⓕ
Q4004	D-3 ©		IC4053	H-2 Ⓕ		VR4008	H-3 ©
Q4005	E-3 ©		IC4054	H-1 ©		VR4008	H-3 Ⓕ
Q4006	F-3 ©		IC4059	F-1 ©	**Connectors**		
Q4007	G-3 ©		IC4059	F-1 Ⓕ			
Q4008	H-3 Ⓕ		IC4061	B-4 Ⓕ	P017	F-5 ©	
Integrated Circuits			IC4062	C-4 ©	P017	G-5 Ⓕ	
			IC4063	D-4 Ⓕ	P018	C-5 ©	
IC4001	B-4 ©		IC4064	B-4 Ⓕ	P018	C-5 Ⓕ	
IC4002	B-3 ©		IC4065	C-4 Ⓕ	**Switches**		
IC4003	C-3 ©		IC4066	D-4 Ⓕ			
IC4004	B-3 ©		IC4067	A-4 ©	SW4001	C-3 ©	
IC4005	B-3 ©		IC4068	B-4 ©	SW4001	C-4 Ⓕ	
IC4006	B-2 ©		IC4069	D-4 ©	SW4002	C-3 ©	
IC4007	C-2 Ⓕ		**Test Points**		SW4002	C-4 Ⓕ	
IC4008	H-3 ©				SW4003	C-3 ©	
IC4009	B-2 ©		TP4001	B-3 ©	SW4003	C-3 Ⓕ	
IC4009	B-2 Ⓕ		TP4001	B-3 Ⓕ	SW4004	B-4 ©	
IC4010	B-1 ©		TP4002	B-2 ©	SW4004	B-4 Ⓕ	
IC4011	F-4 ©		TP4002	B-2 Ⓕ	SW4005	B-4 ©	
IC4011	F-4 Ⓕ		TP4003	C-2 ©	SW4005	B-4 Ⓕ	
IC4012	G-4 ©		TP4003	C-2 Ⓕ	SW4006	B-4 ©	
IC4012	G-4 Ⓕ		TP4004	D-3 ©	SW4006	B-4 Ⓕ	
IC4013	E-1 Ⓕ		TP4004	D-3 Ⓕ	SW4007	E-3 ©	
IC4014	C-1 Ⓕ		TP4005	D-2 ©	SW4007	E-4 Ⓕ	
IC4015	D-4 ©		TP4005	D-2 Ⓕ	SW4008	E-3 ©	
IC4016	D-3 ©		TP4006	E-2 ©	SW4008	E-4 Ⓕ	
IC4017	E-3 ©		TP4006	E-2 Ⓕ	SW4009	E-3 ©	
IC4018	D-3 ©		TP4007	F-3 ©	SW4009	E-3 Ⓕ	
IC4019	D-3 ©		TP4007	F-3 Ⓕ	SW4010	D-4 ©	
IC4020	D-2 ©		TP4008	F-2 ©	SW4010	D-4 Ⓕ	
IC4021	E-2 Ⓕ		TP4008	F-2 Ⓕ	SW4011	D-4 ©	
IC4022	E-1 Ⓕ		TP4009	G-2 ©	SW4011	D-4 Ⓕ	
IC4023	D-2 ©		TP4009	G-2 Ⓕ	SW4012	D-4 ©	
IC4023	D-2 Ⓕ		TP4010	H-3 ©	SW4012	D-4 Ⓕ	
IC4024	D-1 ©		TP4010	H-3 Ⓕ	SW4013	G-3 ©	
IC4029	B-1 ©		TP4011	H-2 ©	SW4013	G-4 Ⓕ	
IC4029	B-1 Ⓕ		TP4011	H-2 Ⓕ	SW4014	G-3 ©	
IC4031	F-4 ©		TP4012	I-2 ©	SW4014	G-4 Ⓕ	
IC4032	F-4 ©		TP4012	I-2 Ⓕ	SW4015	G-3 ©	
IC4033	G-3 ©		TPG4001	C-3 ©	SW4015	G-3 Ⓕ	
IC4034	F-3 ©		TPG4001	C-3 Ⓕ	SW4016	F-4 ©	
IC4035	F-3 ©		TPG4002	D-3 ©	SW4016	F-4 Ⓕ	
IC4036	F-2 ©		TPG4002	E-3 Ⓕ	SW4017	F-4 ©	
IC4037	G-2 Ⓕ		TPG4003	F-3 ©	SW4017	F-4 Ⓕ	
IC4038	G-1 Ⓕ		TPG4003	G-3 Ⓕ	SW4018	F-4 ©	
IC4039	F-2 ©		TPG4004	H-3 ©	SW4018	F-4 Ⓕ	
IC4039	F-2 Ⓕ		TPG4004	H-3 Ⓕ	SW4019	I-3 ©	
IC4040	F-1 ©		**Adjustments**		SW4019	I-4 Ⓕ	
IC4041	F-4 ©				SW4020	I-3 ©	
IC4041	H-4 Ⓕ		VR4001	B-3 ©	SW4020	I-4 Ⓕ	
IC4042	I-5 ©		VR4001	A-3 Ⓕ	SW4021	I-3 ©	
IC4042	I-5 Ⓕ		VR4002	B-3 ©	SW4021	I-3 Ⓕ	
IC4043	I-1 Ⓕ		VR4002	B-3 Ⓕ	SW4022	H-4 ©	
IC4044	G-1 Ⓕ		VR4003	C-3 ©	SW4022	H-4 Ⓕ	
IC4045	H-4 ©		VR4003	C-3 Ⓕ	SW4023	H-4 ©	
IC4046	H-4 ©		VR4004	D-3 ©	SW4023	H-4 Ⓕ	
IC4047	I-3 ©		VR4004	D-3 Ⓕ	SW4024	H-4 ©	
IC4048	H-3 ©		VR4005	E-3 ©	SW4024	H-4 Ⓕ	
IC4049	H-3 ©		VR4005	E-3 Ⓕ			

ADDRESS INFORMATION
© ... COMPONENT SIDE
Ⓕ ... FOIL SIDE

VIDEO A/D, D/A (S10) P.C. BOARD (VEP88093A)

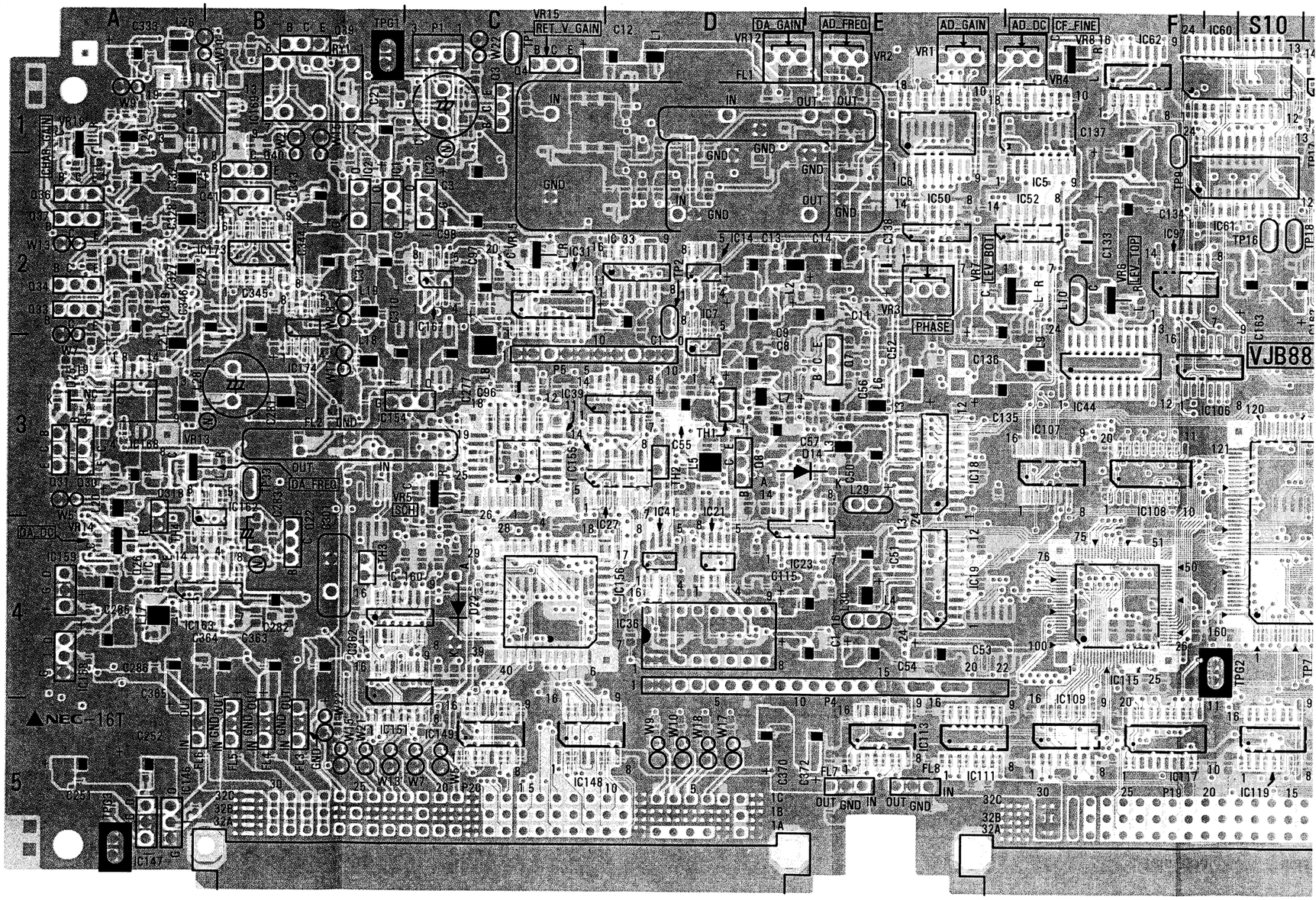

VIDEO A/D, D/A (S10)

Transistors

Q8001	C-1	Ⓕ
Q8002	B-1	Ⓕ
Q8003	C-1	Ⓒ
Q8003	C-1	Ⓕ
Q8004	C-1	Ⓕ
Q8005	D-1	Ⓕ
Q8006	D-1	Ⓕ
Q8007	E-3	Ⓒ
Q8007	E-3	Ⓕ
Q8008	D-3	Ⓒ
Q8008	D-3	Ⓕ
Q8009	D-3	Ⓕ
Q8010	D-3	Ⓕ
Q8011	F-2	Ⓒ
Q8012	E-2	Ⓕ
Q8013	G-2	Ⓕ
Q8014	G-1	Ⓒ
Q8015	G-1	Ⓒ
Q8016	H-2	Ⓕ
Q8017	H-1	Ⓕ
Q8022	B-4	Ⓒ
Q8022	B-4	Ⓕ
Q8026	A-4	Ⓒ
Q8027	B-4	Ⓕ
Q8028	C-2	Ⓕ
Q8029	A-3	Ⓕ
Q8030	A-3	Ⓒ
Q8030	A-3	Ⓕ
Q8031	A-3	Ⓒ
Q8031	A-3	Ⓕ
Q8032	A-2	Ⓕ
Q8033	A-2	Ⓒ
Q8033	A-2	Ⓕ
Q8034	A-2	Ⓒ
Q8034	A-2	Ⓕ
Q8035	A-1	Ⓕ
Q8036	A-2	Ⓒ
Q8036	A-2	Ⓕ
Q8037	A-2	Ⓒ
Q8037	A-2	Ⓕ
Q8038	B-2	Ⓕ
Q8039	B-1	Ⓒ
Q8039	B-1	Ⓕ
Q8040	B-2	Ⓕ
Q8041	B-2	Ⓕ

Integrated Circuits

IC8001	B-2	Ⓒ
IC8001	B-2	Ⓕ
IC8002	B-2	Ⓒ
IC8002	B-2	Ⓕ
IC8003	D-3	Ⓕ
IC8004	D-2	Ⓕ
IC8005	F-2	Ⓒ
IC8006	E-2	Ⓒ
IC8007	D-2	Ⓒ
IC8008	D-2	Ⓕ
IC8009	D-4	Ⓕ
IC8010	E-2	
IC8014	D-2	Ⓒ
IC8015	E-3	Ⓕ
IC8018	E-3	Ⓒ
IC8019	E-4	Ⓒ
IC8020	E-2	Ⓕ
IC8021	D-3	Ⓒ
IC8023	D-4	Ⓒ
IC8027	D-3	Ⓒ
IC8031	C-2	Ⓒ
IC8032	C-2	Ⓒ
IC8032	C-2	Ⓕ
IC8033	D-2	Ⓒ
IC8035	C-2	Ⓕ
IC8036	D-4	Ⓒ
IC8037	E-4	Ⓕ
IC8038	E-4	Ⓕ
IC8039	C-3	Ⓒ
IC8041	D-3	Ⓒ
IC8043	F-2	Ⓕ
IC8044	F-3	Ⓒ
IC8045	F-1	Ⓕ
IC8046	F-3	Ⓕ
IC8047	F-3	Ⓕ
IC8048	F-2	Ⓕ
IC8050	E-2	Ⓒ
IC8052	F-2	Ⓒ
IC8056	F-1	
IC8058	G-3	Ⓒ
IC8059	G-4	Ⓒ
IC8060	G-1	Ⓒ
IC8061		
IC8061		
IC8062	F-1	Ⓒ
IC8064	G-2	Ⓒ
IC8065	G-2	Ⓕ
IC8066	G-2	Ⓕ
IC8067	G-3	Ⓒ
IC8068	H-3	Ⓕ
IC8069	H-2	Ⓕ
IC8071	H-2	Ⓕ
IC8072	G-1	Ⓕ
IC8074	H-1	Ⓒ
IC8078	H-1	Ⓒ
IC8083	H-2	Ⓕ
IC8084	I-3	Ⓕ
IC8085	I-3	Ⓒ
IC8086	I-2	Ⓕ
IC8087	I-2	Ⓒ
IC8088	I-2	Ⓒ
IC8091	H-2	Ⓒ
IC8093	I-1	Ⓒ
IC8094	I-3	Ⓒ
IC8095	H-3	
IC8096		
IC8096		
IC8097	F-2	Ⓒ
IC8106	G-3	Ⓒ
IC8107	F-3	Ⓒ
IC8108	F-3	Ⓒ
IC8109	F-4	Ⓒ
IC8111	E-5	Ⓒ
IC8113	E-5	Ⓒ
IC8116	I-4	Ⓕ
IC8117	F-5	Ⓒ
IC8119	G-5	Ⓒ
IC8120	H-5	Ⓒ
IC8121	G-5	Ⓒ
IC8125	H-4	Ⓒ
IC8126	I-4	Ⓒ
IC8127	I-4	Ⓕ
IC8128	I-5	Ⓒ
IC8129	I-5	Ⓕ
IC8134	H-4	Ⓒ
IC8137	I-4	Ⓕ
IC8138	I-4	Ⓒ
IC8142	I-5	Ⓒ
IC8143	H-5	Ⓒ
IC8144	H-5	Ⓕ
IC8145	I-5	Ⓕ
IC8146	A-5	Ⓒ
IC8146	A-5	Ⓕ
IC8147	A-5	Ⓒ
IC8147	A-5	Ⓕ
IC8148	C-5	Ⓒ
IC8149	C-5	Ⓒ
IC8151	B-5	Ⓒ
IC8154	B-3	Ⓒ
IC8154	B-3	Ⓕ
IC8155	C-3	Ⓒ
IC8156	D-4	Ⓒ
IC8157	C-4	Ⓕ
IC8158	A-4	Ⓒ
IC8158	A-4	Ⓕ
IC8159	A-4	Ⓒ
IC8159	A-4	Ⓕ
IC8160	C-4	Ⓒ
IC8162	B-3	Ⓒ
IC8163	B-4	Ⓒ
IC8167	C-2	Ⓒ
IC8168	A-3	Ⓒ
IC8169	B-1	Ⓒ
IC8171	B-2	Ⓕ
IC8172	B-2	Ⓕ
IC8173	B-2	Ⓒ
IC8174	B-3	Ⓒ
IC8175	D-4	Ⓕ
IC8176	D-4	Ⓕ
IC8177	C-4	Ⓕ
IC8178	B-3	Ⓕ

Test Points

TP8001	C-1	Ⓒ
TP8001	C-1	Ⓕ
TP8002	D-2	Ⓒ
TP8002	D-2	Ⓕ
TP8006	G-4	Ⓒ
TP8006	G-4	Ⓕ
TP8007	G-4	Ⓒ
TP8007	G-4	Ⓕ
TP8009	F-2	Ⓒ
TP8009	F-1	Ⓕ
TP8016	G-2	Ⓒ
TP8016	G-2	Ⓕ
TP8017	G-1	Ⓒ
TP8017	G-1	Ⓕ
TP8018	G-2	Ⓒ
TP8018	G-2	Ⓕ
TP8033	B-3	Ⓒ
TP8033	B-3	Ⓕ
TPG8001	B-1	Ⓒ
TPG8001	B-1	Ⓕ
TPG8002	G-4	Ⓒ
TPG8002	G-4	Ⓕ
TPG8003	A-5	Ⓒ
TPG8003	A-5	Ⓕ

Adjustments

VL8001	H-1	Ⓒ
VL8001	H-1	Ⓕ
VR8001	E-1	Ⓒ
VR8001	E-1	Ⓕ
VR8002	E-1	Ⓒ
VR8002	E-1	Ⓕ
VR8003	E-2	Ⓒ
VR8003	E-2	Ⓕ
VR8004	F-1	Ⓒ
VR8004	F-1	Ⓕ
VR8005	C-3	Ⓒ
VR8006	F-2	Ⓒ
VR8007	E-2	Ⓒ
VR8008	F-1	Ⓒ
VR8010	H-2	Ⓒ
VR8011	I-2	Ⓒ
VR8012	D-1	Ⓒ
VR8012	D-1	Ⓕ
VR8013	A-3	Ⓒ
VR8014	A-4	Ⓒ
VR8015	C-2	Ⓒ
VR8016	A-1	Ⓒ

Connectors

P8001	C-1	Ⓒ
P8001	C-1	Ⓕ
P8019	F-5	Ⓒ
P8019	G-5	Ⓕ
P8020	C-5	Ⓒ
P8020	C-5	Ⓕ

ADDRESS INFORMATION
Ⓒ ... COMPONENT SIDE
Ⓕ ... FOIL SIDE

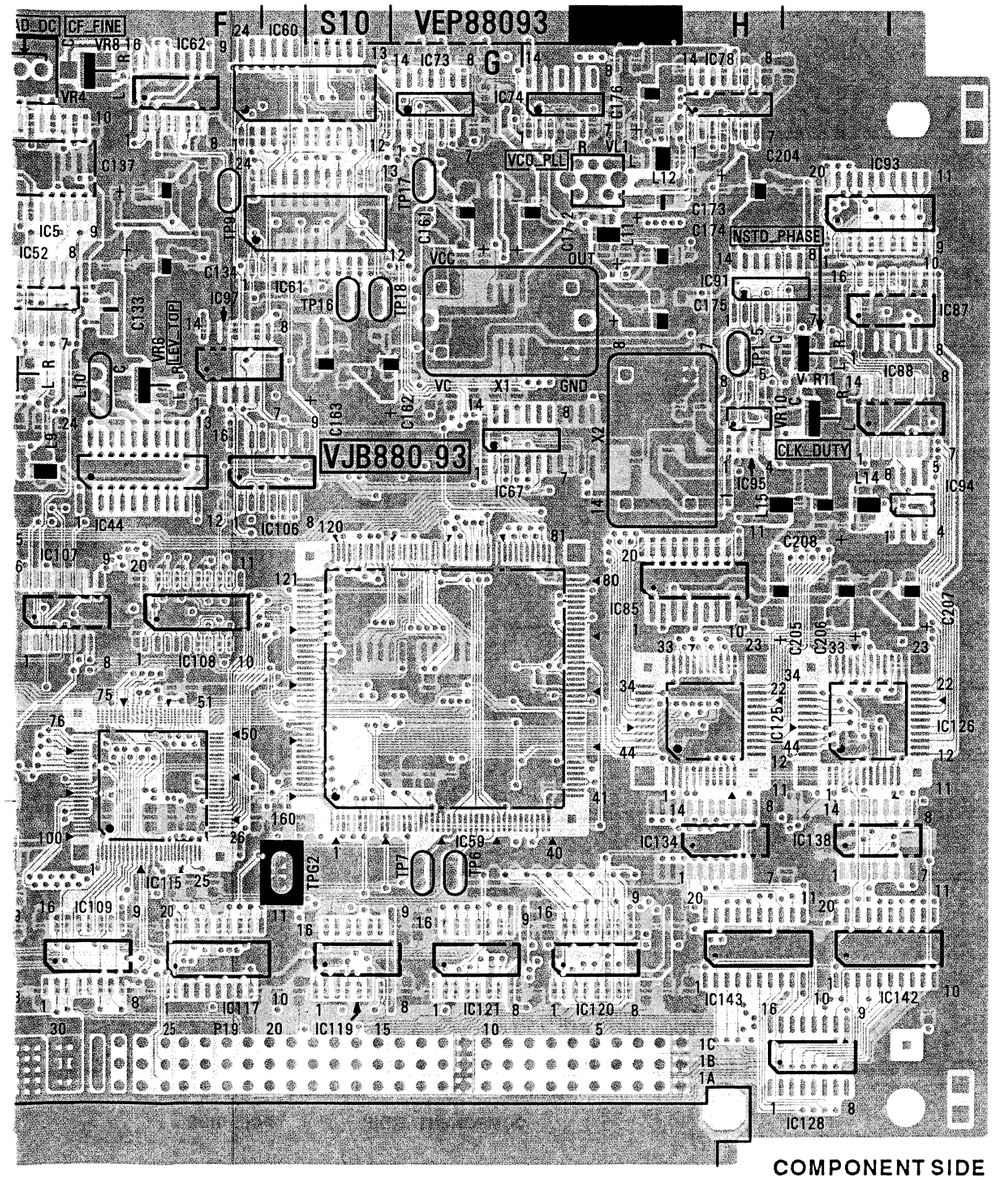

COMPONENT SIDE

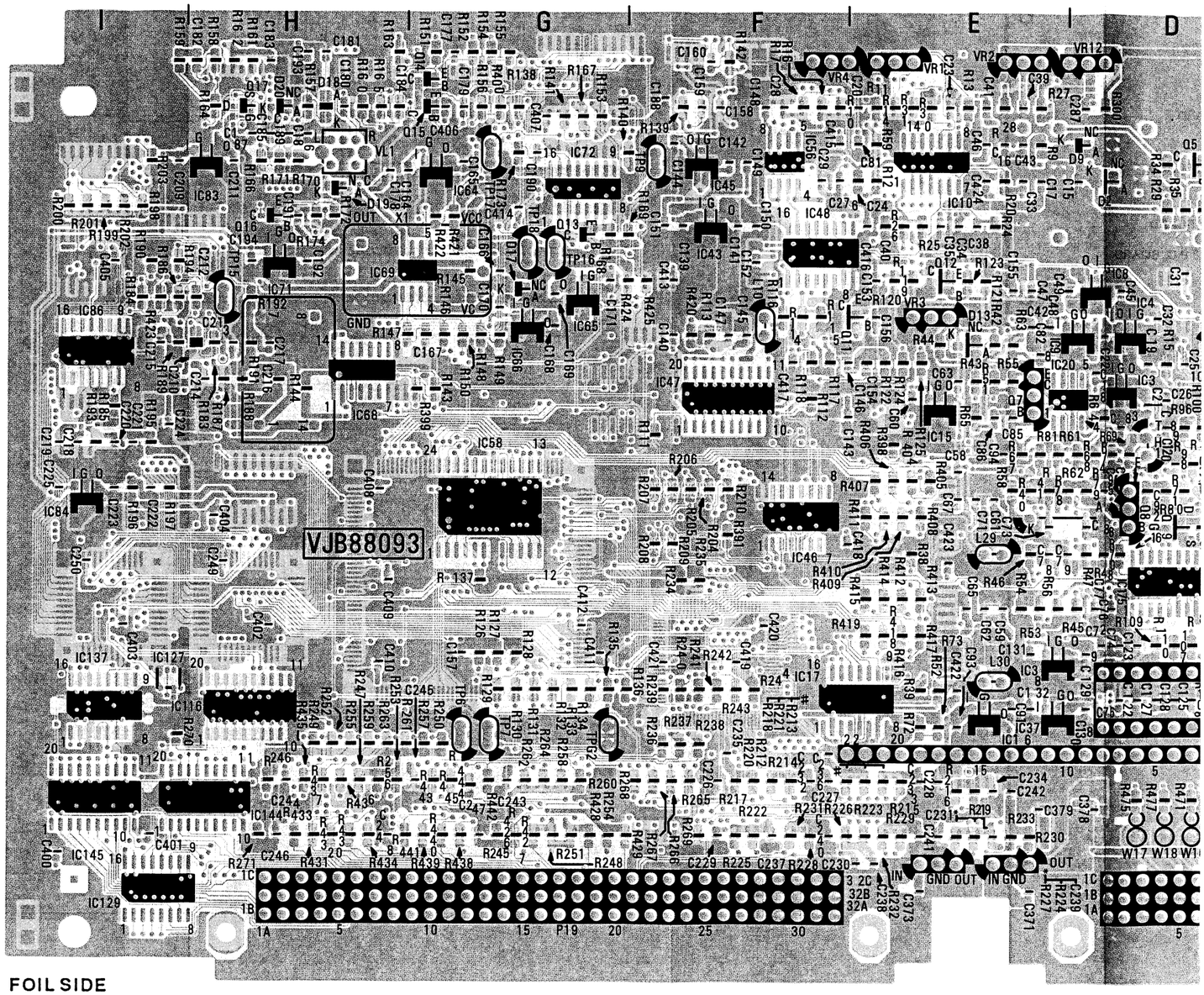

FOIL SIDE

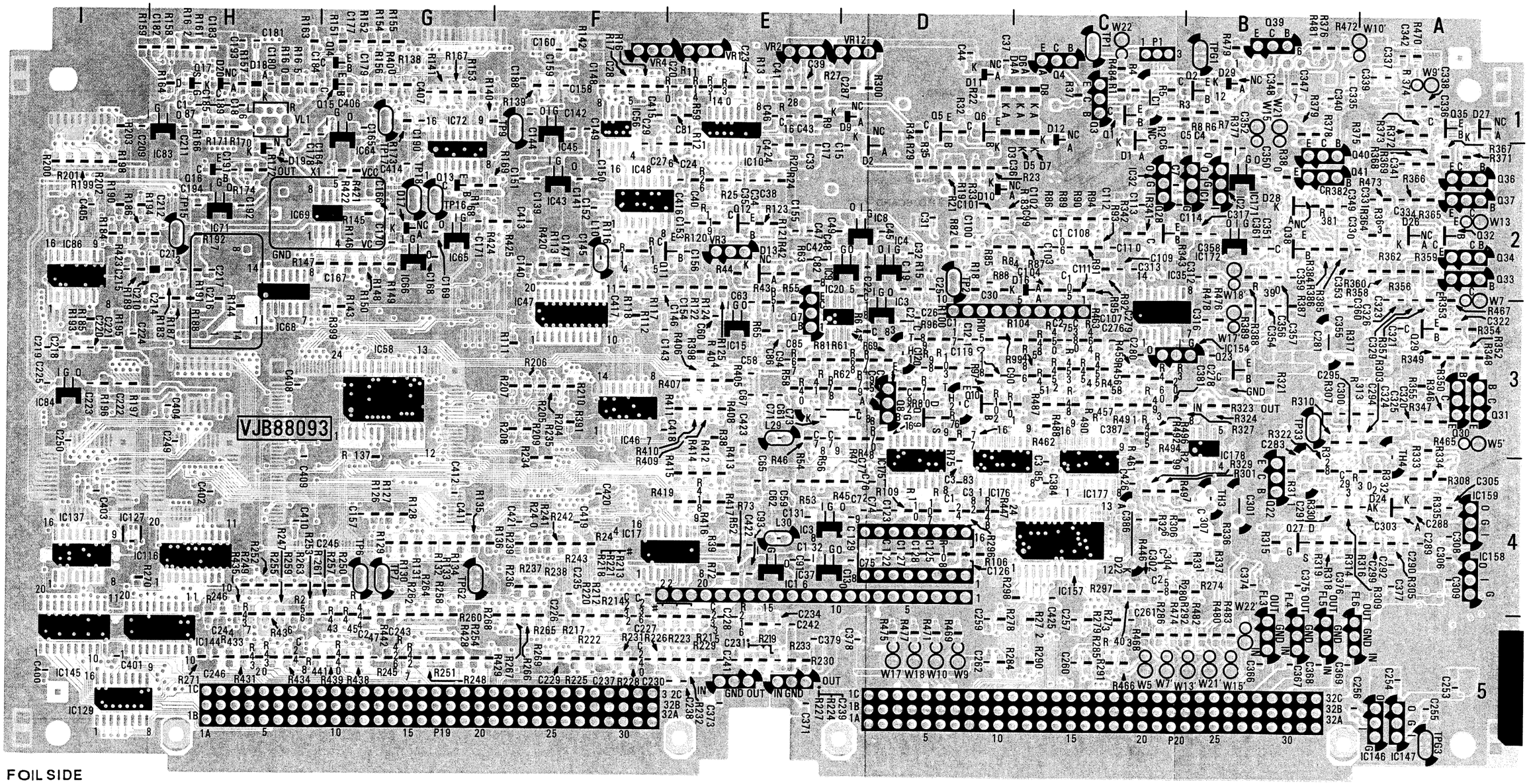

FOIL SIDE

REVERSE SIDE
MAIN MOTHER

CIRCUIT BOARD LOCATION

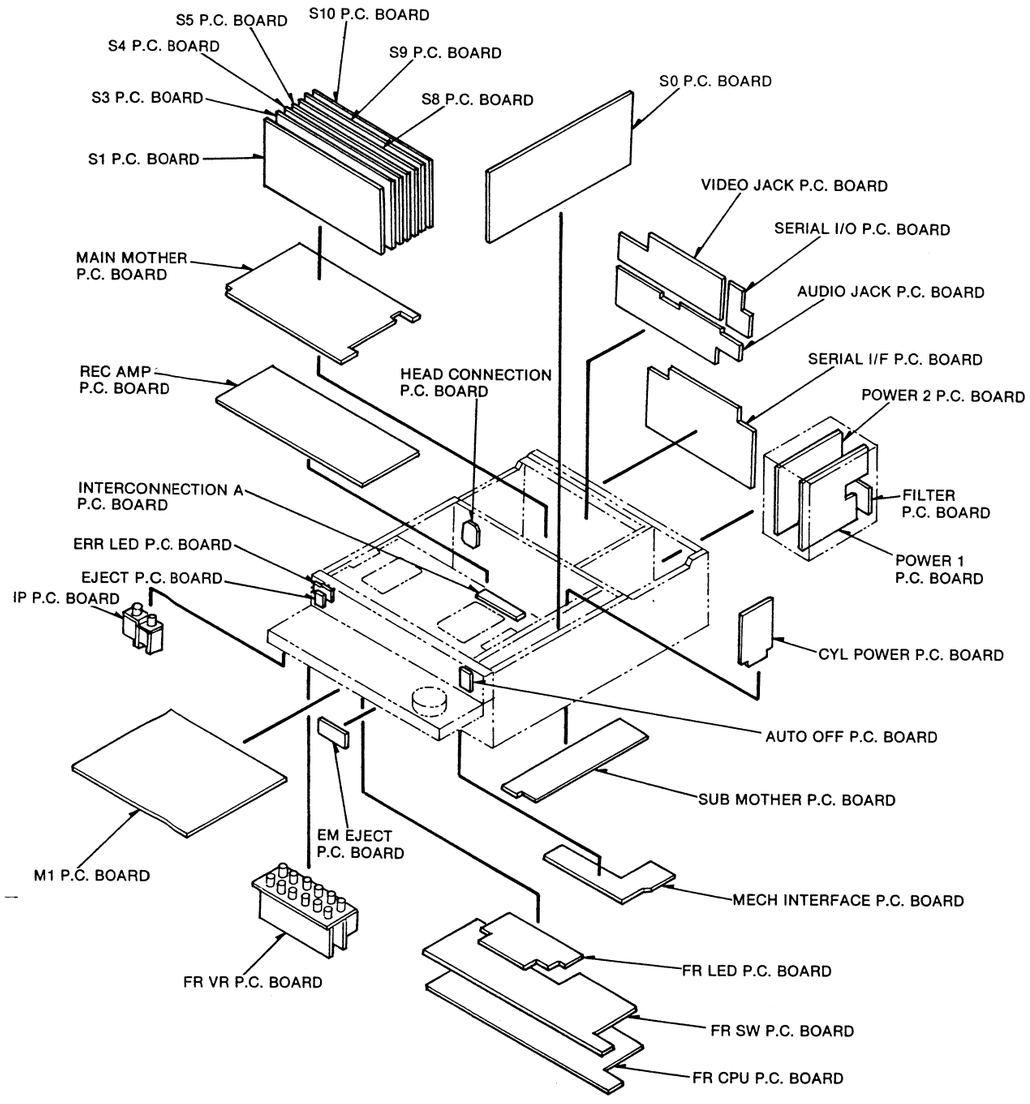

MAIN MOTHER P.C. BOARD (VEP80786A)

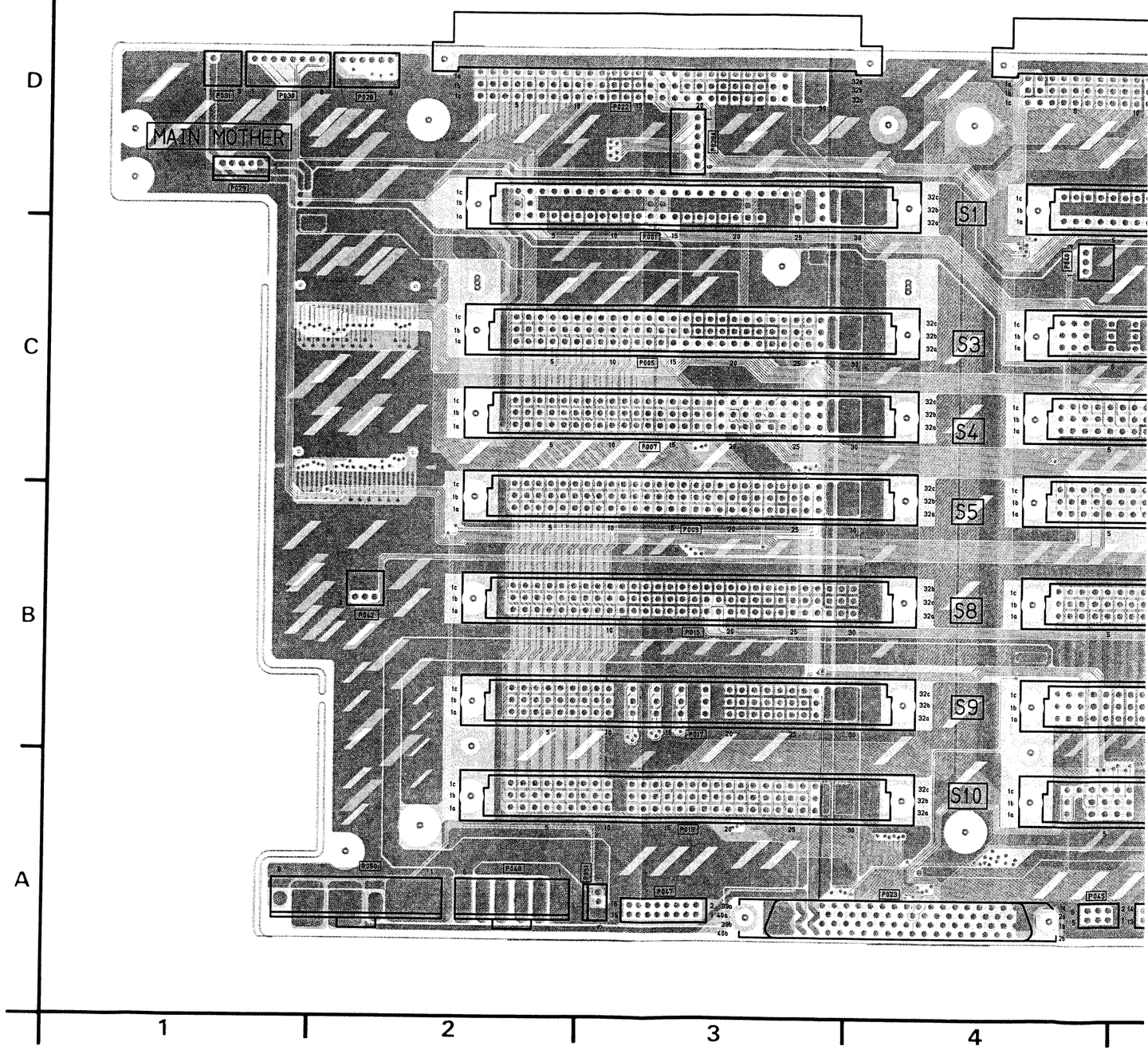

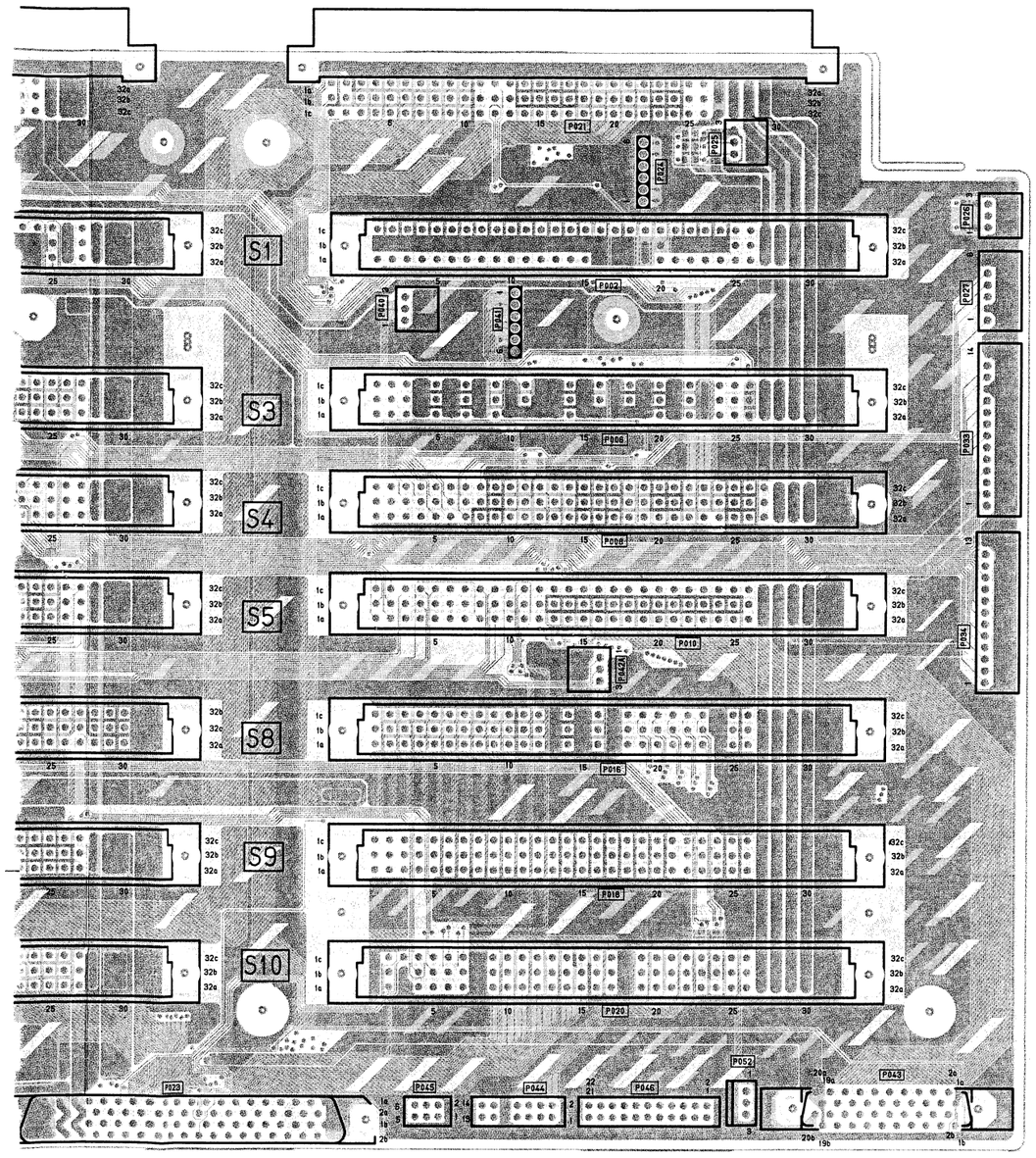

COMPONENT SIDE

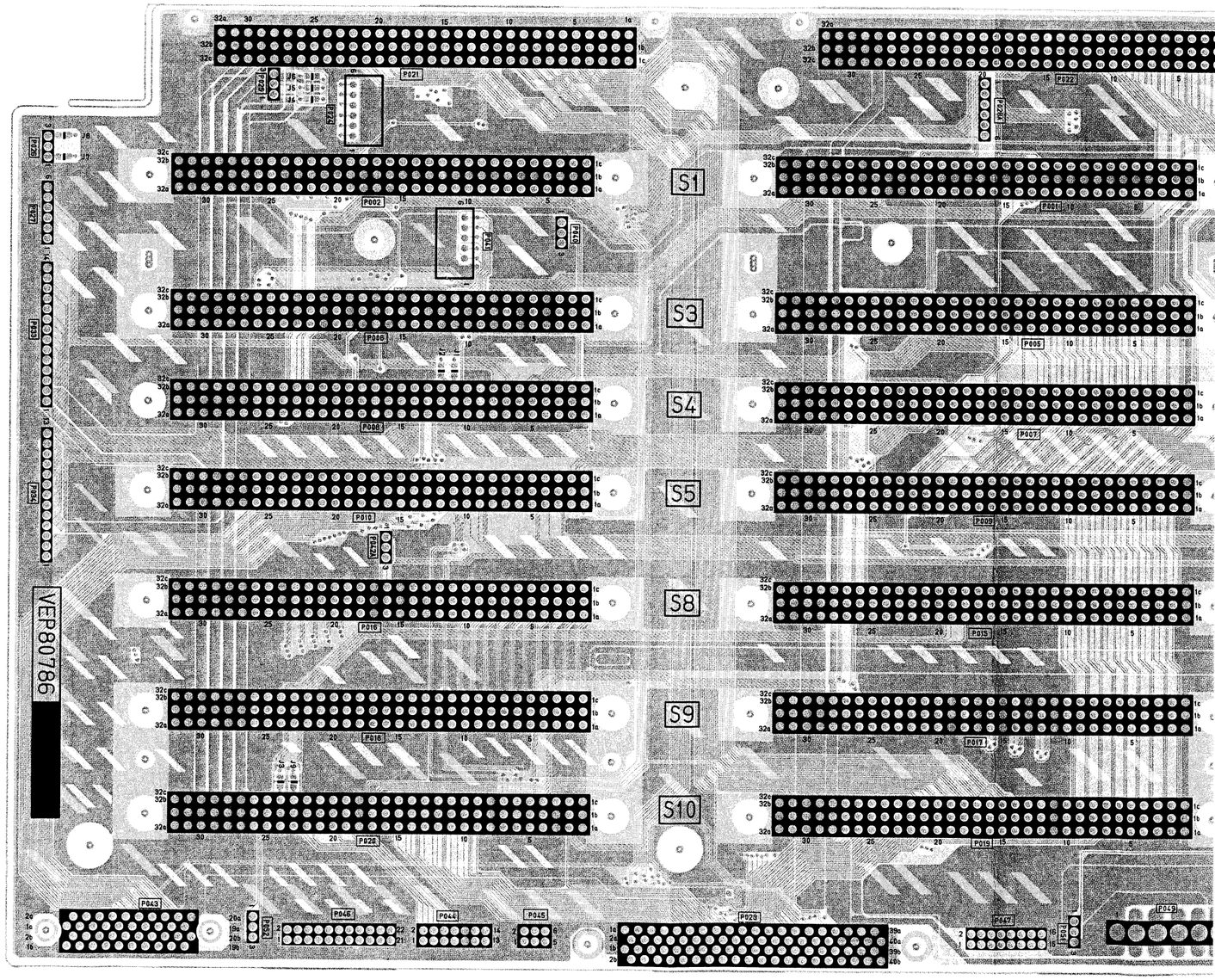

FOIL SIDE

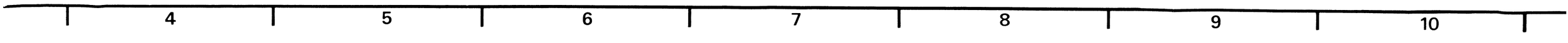

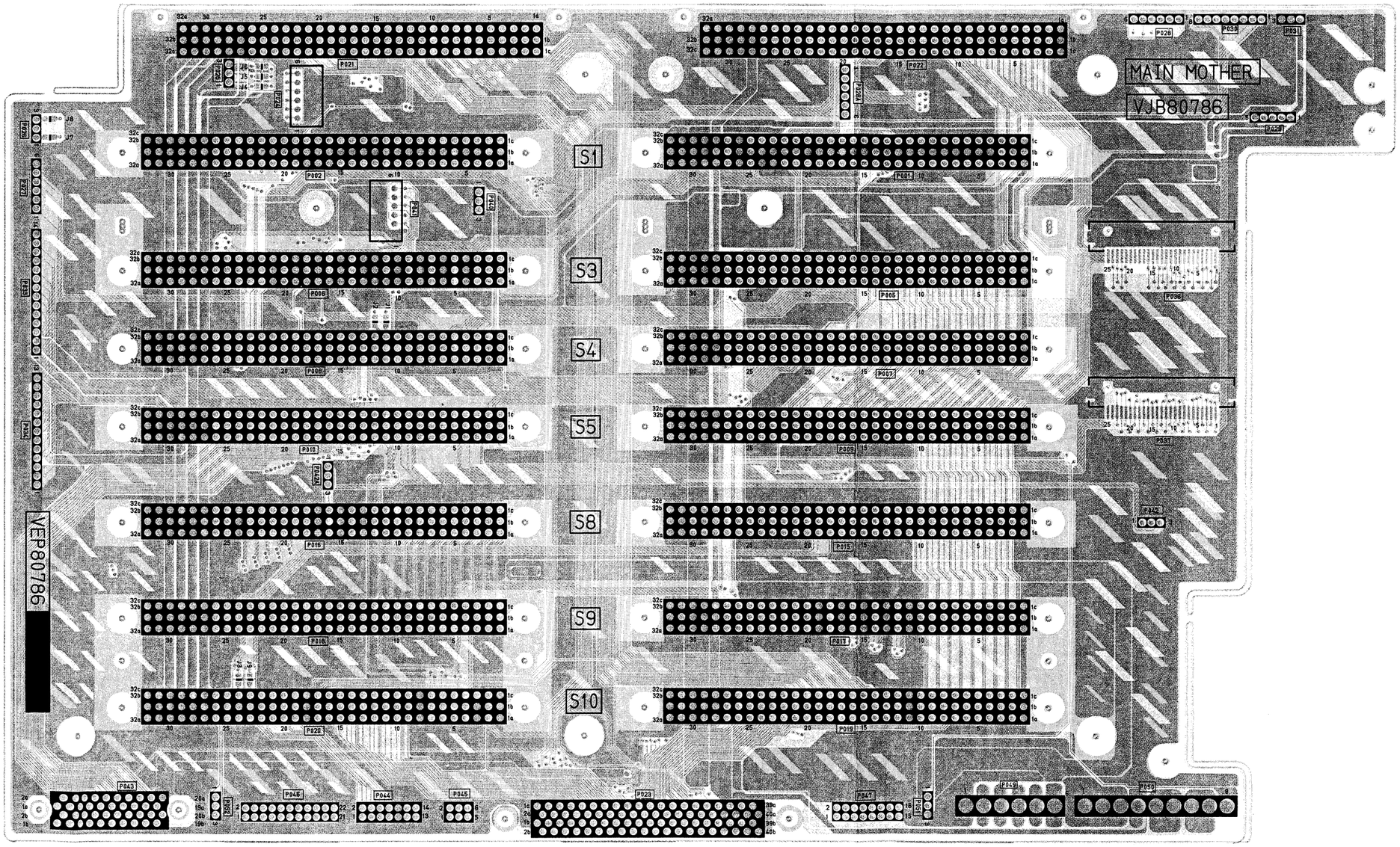

FOIL SIDE

MAIN MOTHER					
Connecters			P028	D-2	©
P001	C-3	©	P028	D-11	Ⓕ
P001	C-10	Ⓕ	P028A	D-3	©
P002	C-5	©	P028A	D-11	Ⓕ
P002	C-8	Ⓕ	P029	D-1	©
P005	C-3	©	P029	D-11	Ⓕ
P005	C-10	Ⓕ	P030	D-1	©
P006	C-5	©	P030	D-11	Ⓕ
P006	C-8	Ⓕ	P031	D-1	©
P007	C-3	©	P031	D-11	Ⓕ
P007	C-10	Ⓕ	P033	C-6	©
P008	C-5	©	P033	C-7	Ⓕ
P008	C-8	Ⓕ	P034	B-6	©
P009	B-3	©	P034	B-7	Ⓕ
P009	B-10	Ⓕ	P036	C-11	Ⓕ
P010	B-5	©	P037	B-11	Ⓕ
P010	B-8	Ⓕ	P040	C-4	©
P015	B-3	©	P040	C-8	Ⓕ
P015	B-10	Ⓕ	P041	C-5	©
P016	B-5	©	P041	C-8	Ⓕ
P016	B-8	Ⓕ	P042	B-2	©
P017	B-3	©	P042	B-11	Ⓕ
P017	B-10	Ⓕ	P042A	B-5	©
P018	B-5	©	P042A	B-8	Ⓕ
P018	B-8	Ⓕ	P043	A-6	©
P019	A-3	©	P043	A-7	Ⓕ
P019	A-10	Ⓕ	P044	A-5	©
P020	A-5	©	P044	A-8	Ⓕ
P020	A-8	Ⓕ	P045	A-4	©
P021	D-5	©	P045	A-8	Ⓕ
P021	D-8	Ⓕ	P046	A-5	©
P022	D-3	©	P046	A-8	Ⓕ
P022	D-10	Ⓕ	P047	A-3	©
P023	A-4	©	P047	A-10	Ⓕ
P023	A-9	Ⓕ	P049	A-2	©
P024	D-5	©	P049	A-11	Ⓕ
P024	D-8	Ⓕ	P050	A-2	©
P025	D-5	©	P050	A-11	Ⓕ
P025	D-7	Ⓕ	P051	A-3	©
P026	D-6	©	P051	A-10	Ⓕ
P026	D-7	Ⓕ	P052	A-5	©
P027	C-6	©	P052	A-7	Ⓕ
P027	C-7	Ⓕ			

ADDRESS INFORMATION
© ... COMPONENT SIDE
Ⓕ ... FOIL SIDE

SUB MOTHER P.C. BOARD (VEP80787A)

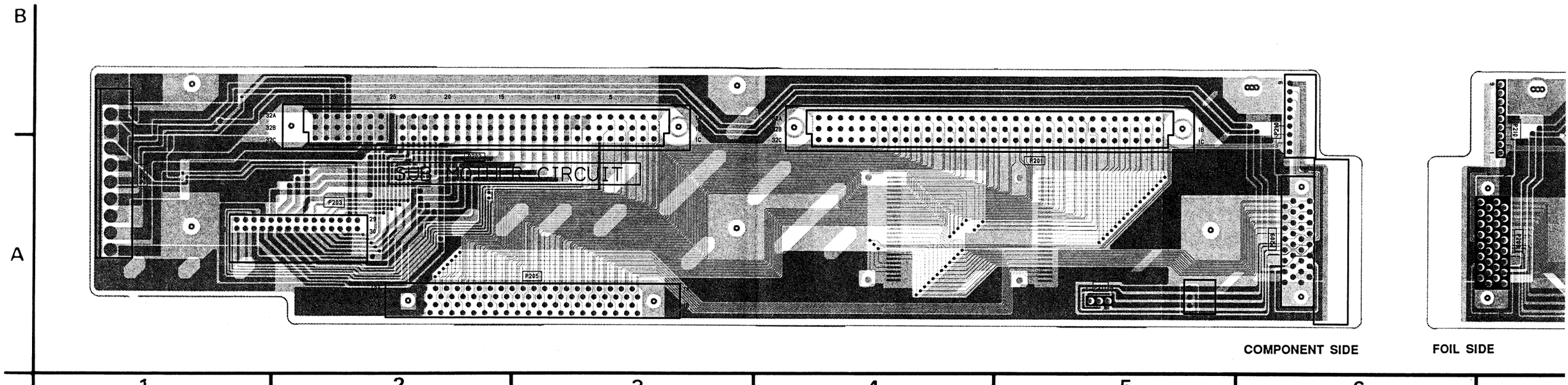

SUB MOTHER	
Connecters	
P201	A-5 ©
P201	A-7 Ⓕ
P202	A-2 ©
P202	B-10 Ⓕ
P203	A-2 ©
P203	A-11 Ⓕ
P205	A-3 ©
P205	A-10 Ⓕ
P206	A-1 ©
P206	A-11 Ⓕ
P207	A-8 Ⓕ
P208	A-8 Ⓕ
P209	A-6 ©
P209	A-7 Ⓕ
P210	B-6 ©
P210	A-7 Ⓕ
P211	A-5 ©
P211	A-7 Ⓕ

ADDRESS INFORMATION
©... COMPONENT SIDE
Ⓕ... FOIL SIDE

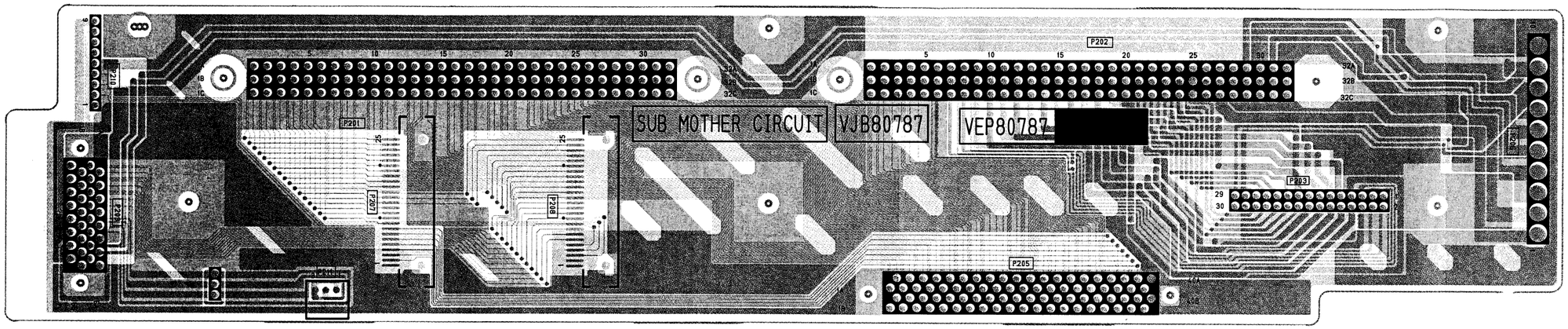

FOIL SIDE

FOIL SIDE

7 8 9 10 11

EM EJECT P.C. BOAR
HEAD CONNECTION

C

EM EJEC

B

HEAD CONNE

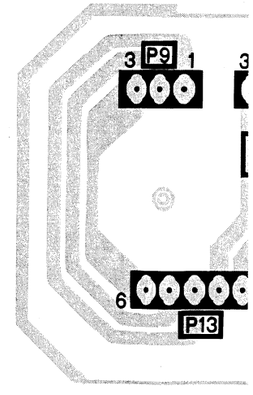

A

1

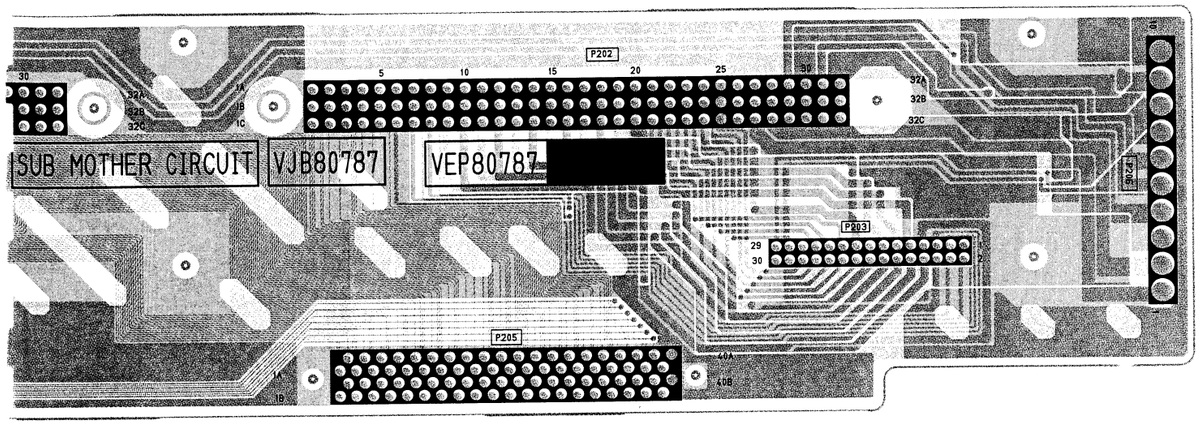

EM EJECT P.C. BOARD (VEP82098A)
HEAD CONNECTION P.C. BOARD (VEP80785A)

EM EJECT P.C. BOARD (VEP82098A)

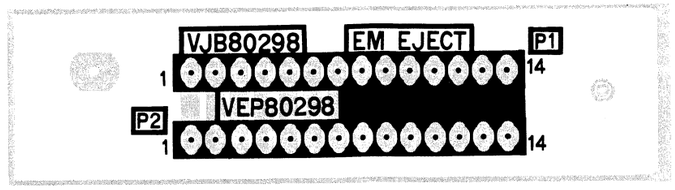

HEAD CONNECTION P.C. BOARD (VEP80785A)

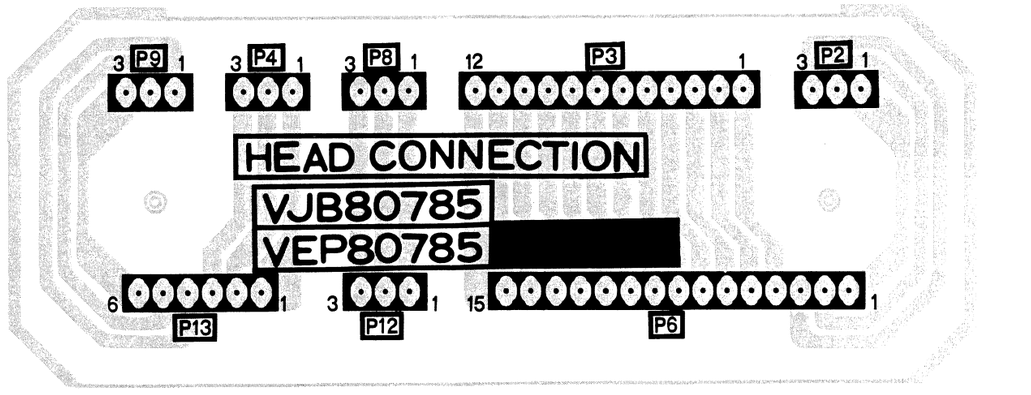

REVERSE SIDE
REC AMP

EC AMP P.C. BOARD (VEP85037A)

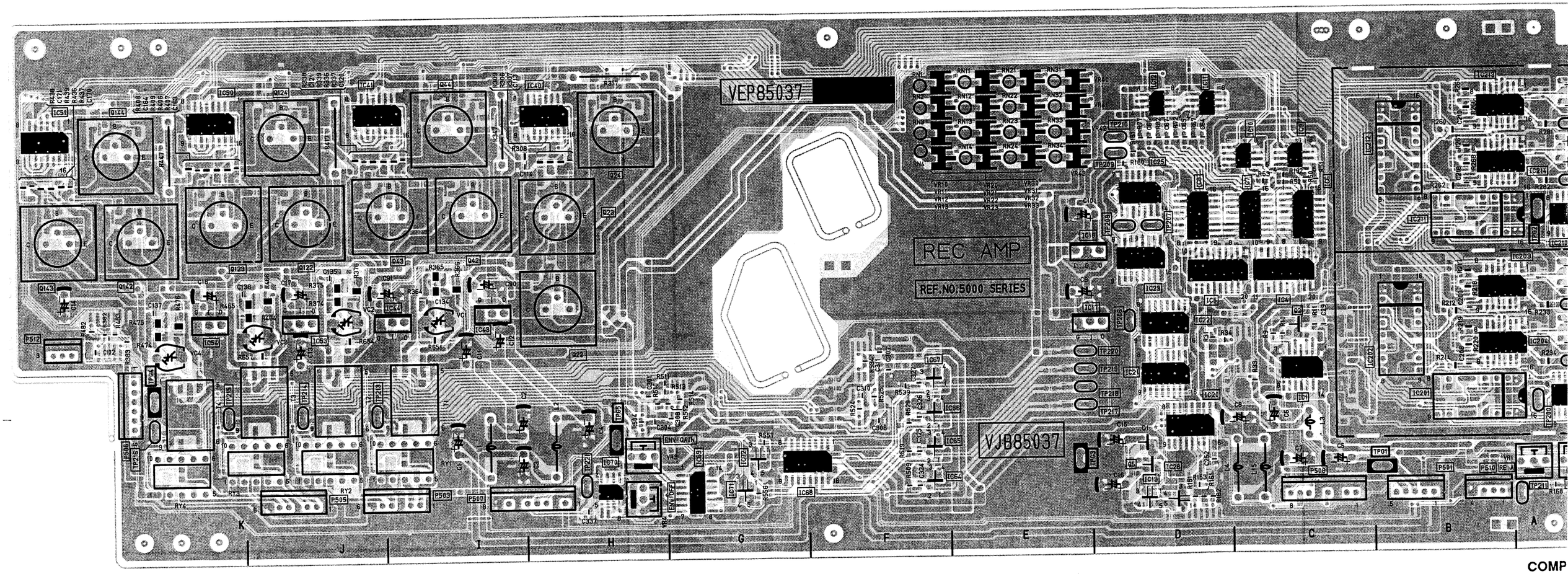

COMP

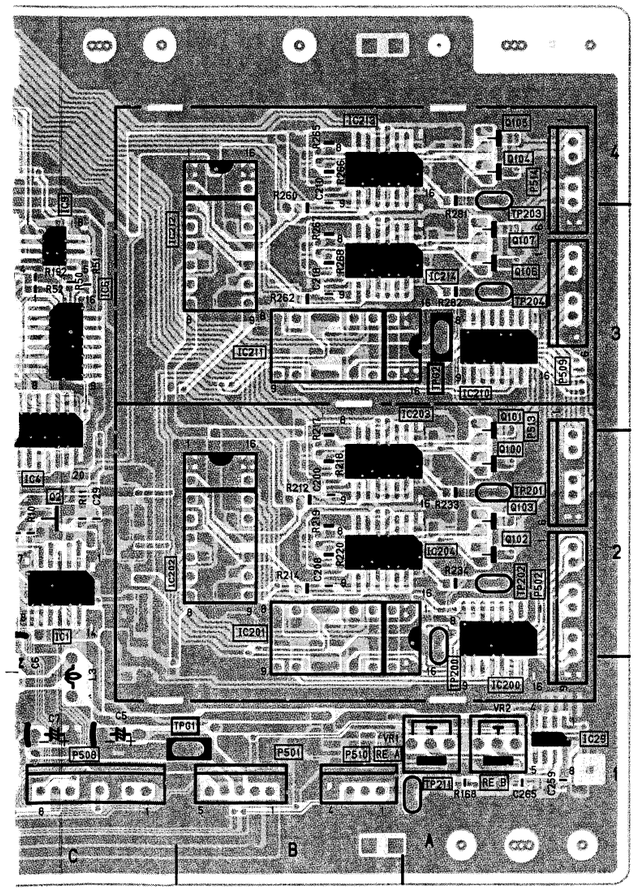

COMPONENT SIDE

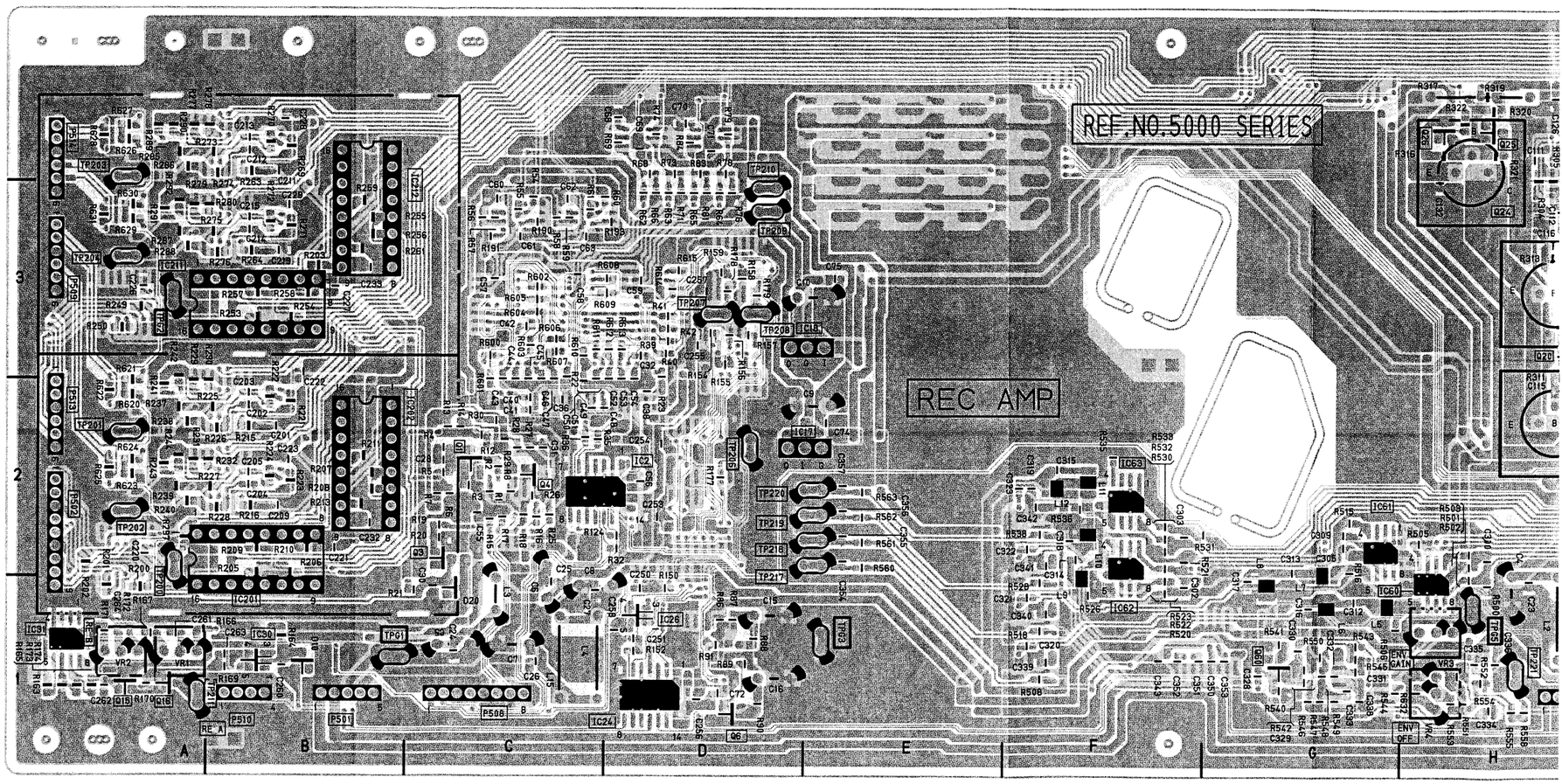

FOIL SIDE

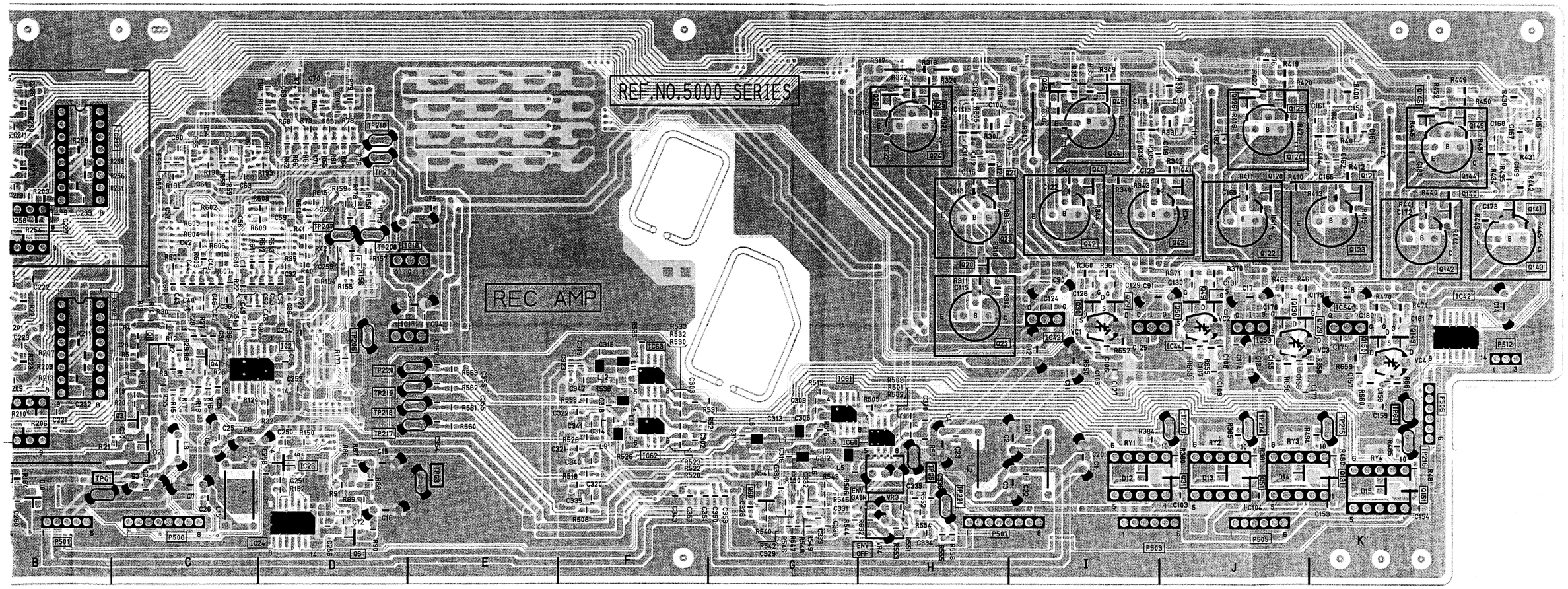
REF.NO.5000 SERIES
REC AMP
ENV GAIN
ENV OFF
B
C
D
E
F
G
H
I
J
K

HEAD AMP P.C. BOARD (VEP85038A)

REC AMP											
Transistors		Q143	K-3 Ⓒ	IC72	G-1 Ⓒ	TPG3	E-1 Ⓕ
Q1	C-2 Ⓕ	Q143	K-3 Ⓕ	IC200	A-1 Ⓒ	TPG4	K-2 Ⓒ
Q2	C-2 Ⓒ	Q144	K-3 Ⓕ	IC201	B-2 Ⓒ	TPG4	K-2 Ⓕ
Q3	C-2 Ⓕ	Q145	K-4 Ⓕ	IC201	B-1 Ⓕ	TPG5	H-1 Ⓒ
Q4	C-2 Ⓕ	Q146	K-4 Ⓕ	IC202	B-2 Ⓒ	TPG5	H-1 Ⓕ
Q5	D-1 Ⓒ	Q149	K-2 Ⓕ	IC202	B-2 Ⓕ	**Adjustments**	
Q6	D-1 Ⓕ	Q150	K-2 Ⓕ	IC203	B-2 Ⓒ	VC1	I-2 Ⓒ
Q15	A-1 Ⓕ	Q151	K-1 Ⓕ	IC204	A-2 Ⓒ	VC1	I-2 Ⓕ
Q16	A-1 Ⓕ	**Integrated Circuits**		IC210	A-3 Ⓒ	VC2	J-2 Ⓒ
Q20	H-3 Ⓕ	IC1	C-2 Ⓒ	IC211	B-3 Ⓒ	VC2	J-2 Ⓕ
Q21	H-3 Ⓕ	IC2	D-2 Ⓕ	IC211	B-3 Ⓕ	VC3	J-2 Ⓒ
Q22	H-2 Ⓒ	IC4	C-2 Ⓒ	IC212	B-3 Ⓒ	VC3	K-2 Ⓕ
Q22	H-2 Ⓕ	IC5	D-2 Ⓒ	IC212	B-3 Ⓕ	VC4	K-2 Ⓒ
Q23	H-3 Ⓒ	IC6	C-3 Ⓒ	IC213	B-4 Ⓒ	VC4	K-2 Ⓕ
Q23	H-3 Ⓕ	IC7	C-3 Ⓒ	IC214	B-3 Ⓒ	VR1	A-1 Ⓒ
Q24	H-3 Ⓒ	IC8	D-3 Ⓒ	**Test Points**		VR1	A-1 Ⓕ
Q24	H-3 Ⓕ	IC9	C-3 Ⓒ	TP200	A-1 Ⓒ	VR2	A-1 Ⓒ
Q25	H-4 Ⓕ	IC10	C-3 Ⓒ	TP200	A-1 Ⓕ	VR2	A-1 Ⓕ
Q26	H-4 Ⓕ	IC11	D-4 Ⓒ	TP201	A-2 Ⓒ	VR3	H-1 Ⓒ
Q29	I-2 Ⓕ	IC12	D-4 Ⓒ	TP201	A-2 Ⓕ	VR3	H-1 Ⓕ
Q30	I-2 Ⓕ	IC13	D-1 Ⓒ	TP202	A-2 Ⓒ	VR4	H-1 Ⓒ
Q31	J-1 Ⓕ	IC17	E-2 Ⓒ	TP202	A-2 Ⓕ	VR4	H-1 Ⓕ
Q40	I-3 Ⓕ	IC17	E-2 Ⓕ	TP203	A-3 Ⓒ	VR10	F-3 Ⓒ
Q41	I-4 Ⓕ	IC18	E-3 Ⓒ	TP203	A-4 Ⓕ	VR11	F-3 Ⓒ
Q42	I-3 Ⓒ	IC18	E-3 Ⓕ	TP204	A-3 Ⓒ	VR12	F-3 Ⓒ
Q42	I-3 Ⓕ	IC20	D-1 Ⓒ	TP204	A-3 Ⓕ	VR13	F-3 Ⓒ
Q43	I-3 Ⓒ	IC21	D-2 Ⓒ	TP206	D-2 Ⓒ	VR20	E-3 Ⓒ
Q43	J-3 Ⓕ	IC22	D-2 Ⓒ	TP206	D-2 Ⓕ	VR21	E-3 Ⓒ
Q44	I-4 Ⓒ	IC23	D-2 Ⓒ	TP207	D-3 Ⓒ	VR22	E-3 Ⓒ
Q44	I-4 Ⓕ	IC24	D-1 Ⓕ	TP207	D-3 Ⓕ	VR23	E-3 Ⓒ
Q45	I-4 Ⓕ	IC25	D-3 Ⓒ	TP208	D-3 Ⓒ	VR30	E-3 Ⓒ
Q46	I-4 Ⓕ	IC26	D-1 Ⓕ	TP208	D-3 Ⓕ	VR31	E-3 Ⓒ
Q49	J-2 Ⓕ	IC28	D-1 Ⓒ	TP209	D-3 Ⓒ	VR32	E-3 Ⓒ
Q50	J-2 Ⓕ	IC29	A-1 Ⓒ	TP209	D-3 Ⓕ	VR33	E-3 Ⓒ
Q51	J-1 Ⓕ	IC30	B-1 Ⓕ	TP210	D-4 Ⓒ	**Connectors**	
Q60	G-1 Ⓕ	IC31	A-1 Ⓕ	TP210	D-4 Ⓕ	P501	B-1 Ⓒ
Q100	A-2 Ⓒ	IC40	H-4 Ⓒ	TP211	A-1 Ⓒ	P501	B-1 Ⓕ
Q101	A-3 Ⓒ	IC41	J-4 Ⓕ	TP211	B-1 Ⓕ	P502	A-2 Ⓒ
Q102	A-2 Ⓒ	IC42	K-2 Ⓕ	TP213	J-2 Ⓒ	P502	A-2 Ⓕ
Q103	A-2 Ⓒ	IC43	I-2 Ⓒ	TP213	J-2 Ⓕ	P503	I-1 Ⓒ
Q104	A-4 Ⓒ	IC43	I-2 Ⓕ	TP214	J-2 Ⓒ	P503	I-1 Ⓕ
Q105	A-4 Ⓒ	IC44	I-2 Ⓒ	TP214	J-2 Ⓕ	P505	J-1 Ⓒ
Q106	A-3 Ⓒ	IC44	J-2 Ⓕ	TP215	K-2 Ⓒ	P505	J-1 Ⓕ
Q107	A-3 Ⓒ	IC50	K-4 Ⓒ	TP215	K-2 Ⓕ	P506	K-1 Ⓒ
Q120	J-3 Ⓕ	IC51	K-4 Ⓒ	TP216	K-1 Ⓒ	P506	K-2 Ⓕ
Q121	K-3 Ⓕ	IC53	J-2 Ⓒ	TP216	K-1 Ⓕ	P507	I-1 Ⓒ
Q122	J-3 Ⓒ	IC53	J-2 Ⓕ	TP217	D-2 Ⓒ	P507	H-1 Ⓕ
Q122	J-3 Ⓕ	IC54	K-2 Ⓒ	TP217	D-2 Ⓕ	P508	C-1 Ⓒ
Q123	K-3 Ⓒ	IC54	K-2 Ⓕ	TP218	D-2 Ⓒ	P508	C-1 Ⓕ
Q123	K-3 Ⓕ	IC60	H-1 Ⓕ	TP218	D-2 Ⓕ	P509	A-3 Ⓒ
Q124	J-4 Ⓒ	IC61	G-2 Ⓕ	TP219	D-2 Ⓒ	P509	A-3 Ⓕ
Q124	J-4 Ⓕ	IC62	F-1 Ⓕ	TP219	D-2 Ⓕ	P510	B-1 Ⓒ
Q125	J-4 Ⓕ	IC63	F-2 Ⓕ	TP220	D-2 Ⓒ	P510	B-1 Ⓕ
Q126	J-4 Ⓕ	IC64	F-1 Ⓒ	TP220	D-2 Ⓕ	P512	K-2 Ⓒ
Q129	K-2 Ⓕ	IC65	F-1 Ⓒ	TP221	H-1 Ⓒ	P512	K-2 Ⓕ
Q130	J-2 Ⓕ	IC66	F-2 Ⓒ	TP221	H-1 Ⓕ	P513	A-2 Ⓒ
Q131	K-1 Ⓕ	IC67	G-1 Ⓒ	TPG1	B-1 Ⓒ	P513	A-2 Ⓕ
Q140	K-3 Ⓕ	IC68	F-2 Ⓒ	TPG1	B-1 Ⓕ	P514	A-4 Ⓒ
Q141	K-3 Ⓕ	IC69	G-1 Ⓒ	TPG2	A-3 Ⓒ	P514	A-4 Ⓕ
Q142	K-3 Ⓒ	IC70	H-1 Ⓒ	TPG2	A-3 Ⓕ		
Q142	K-3 Ⓕ	IC71	G-1 Ⓒ	TPG3	E-1 Ⓒ		

ADDRESS INFORMATION
Ⓒ... COMPONENT SIDE
Ⓕ... FOIL SIDE

HEAD AMP		
Transistors		
Q5007	B-2 Ⓒ	
Q5008	B-2 Ⓒ	
Q5009	B-3 Ⓕ	
Q5010	A-3 Ⓕ	
Q5011	A-3 Ⓕ	
Q5012	A-3 Ⓕ	
Q5020	A-2 Ⓒ	
Q5021	A-2 Ⓒ	
Q5022	A-2 Ⓒ	
Q5023	A-2 Ⓒ	
Q5024	A-2 Ⓒ	
Q5107	B-3 Ⓕ	
Q5108	B-2 Ⓕ	
Q5110	A-1 Ⓒ	
Q5111	A-1 Ⓒ	
Integrated Circuits		
IC5001	B-1 Ⓒ	
IC5002	B-2 Ⓕ	
IC5003	A-3 Ⓕ	
IC5020	A-3 Ⓕ	
IC5021	B-1 Ⓒ	
IC5022	B-1 Ⓒ	
IC5023	B-1 Ⓒ	
IC5024	B-3 Ⓕ	
IC5101	A-1 Ⓒ	
IC5102	B-3 Ⓕ	
IC5103	A-3 Ⓕ	

ADDRESS INFORMATION
Ⓒ... COMPONENT SIDE
Ⓕ... FOIL SIDE

HEAD AMP P.C. BOARD (VEP85038A)

COMPONENT SIDE

FOIL SIDE

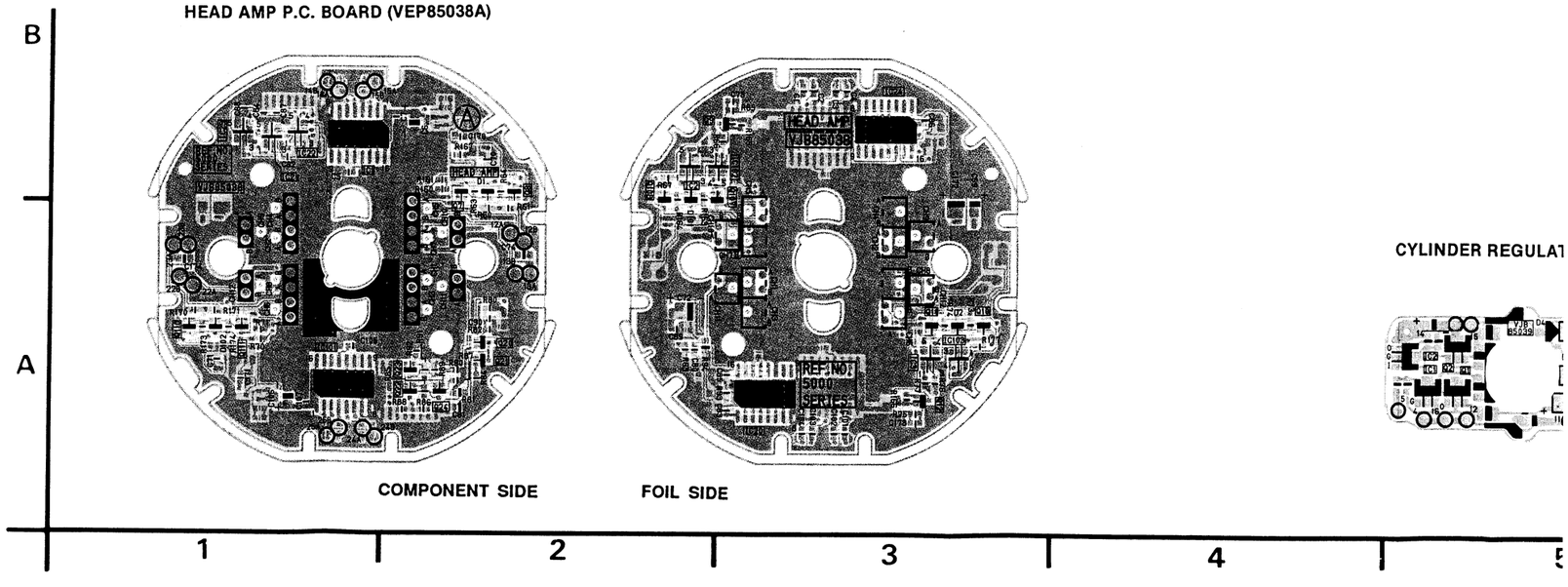

CYLINDER REGULAT

CYLINDER POWER P.C. BOARD (VEP85040A)

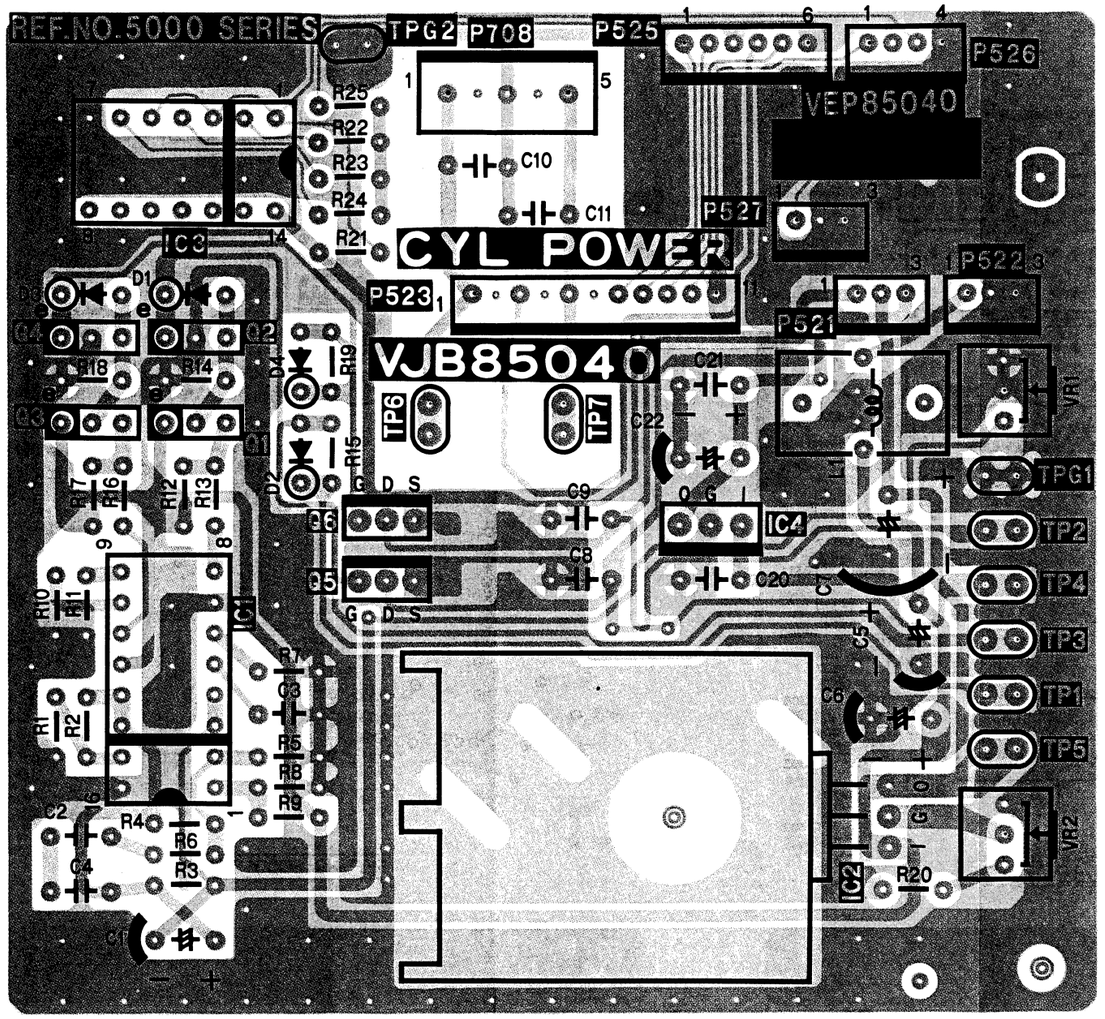

COMPONENT SIDE

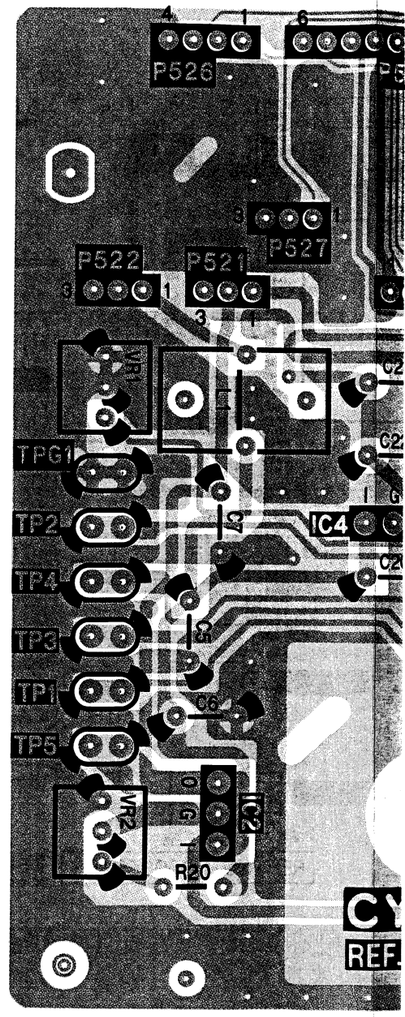

FOIL SIDE

CYLINDER REGULATOR P.C. BOARD
(VEP85039A)

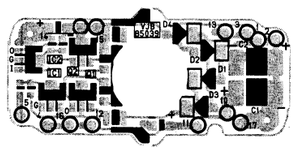

C

B

A

4 5 1 2 3 4

.C. BOARD (VEP85040A)

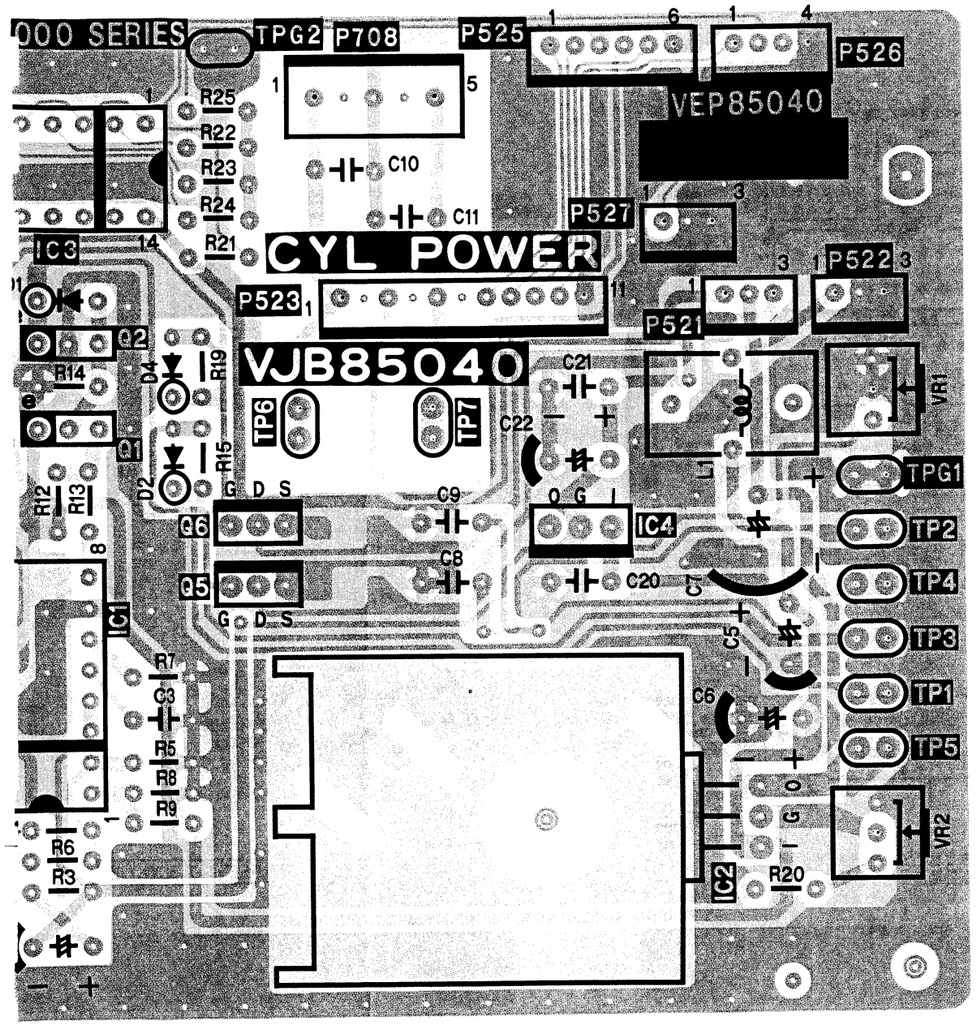

COMPONENT SIDE

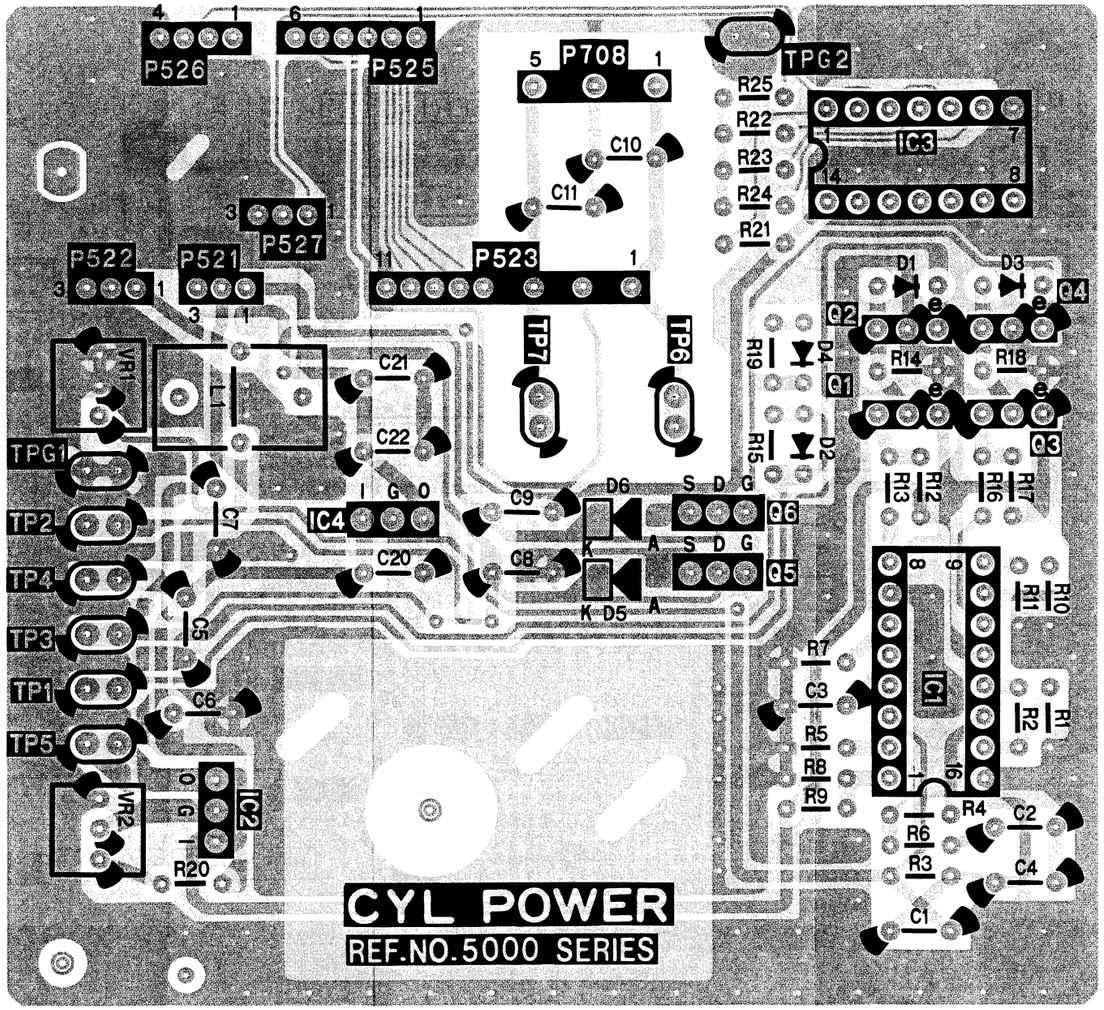

FOIL SIDE

CYLINDER POWER		
Transistors		
Q5001	B-1	©
Q5001	B-5	Ⓕ
Q5002	B-1	©
Q5002	B-5	Ⓕ
Q5003	B-1	©
Q5003	B-5	Ⓕ
Q5004	B-1	©
Q5004	B-5	Ⓕ
Q5005	B-2	©
Q5005	B-5	Ⓕ
Q5006	B-2	©
Q5006	B-5	Ⓕ
Integrated Circuits		
IC5001	B-1	©
IC5001	B-5	Ⓕ
IC5002	A-2	©
IC5002	A-4	Ⓕ
IC5003	C-1	©
IC5003	C-5	Ⓕ
IC5004	B-2	©
IC5004	B-4	Ⓕ
Test Points		
TP5001	A-3	©
TP5001	A-3	Ⓕ
TP5002	B-3	©
TP5002	B-3	Ⓕ
TP5003	B-3	©
TP5003	B-3	Ⓕ
TP5004	B-3	©
TP5004	B-3	Ⓕ
TP5005	A-3	©
TP5005	A-3	Ⓕ
TP5006	B-2	©
TP5006	B-5	Ⓕ
TP5007	B-2	©
TP5007	B-4	Ⓕ
TPG5001	B-3	©
TPG5001	B-3	Ⓕ
TPG5002	C-2	©
TPG5002	C-5	Ⓕ
Adjustments		
VR5001	B-3	©
VR5001	B-4	Ⓕ
VR5002	A-3	©
VR5002	B-4	Ⓕ
Connectors		
P5521	B-3	©
P5521	B-4	Ⓕ
P5522	B-3	©
P5522	B-4	Ⓕ
P5523	B-2	©
P5523	B-4	Ⓕ
P5525	C-2	©
P5525	C-4	Ⓕ
P5526	C-3	©
P5526	C-4	Ⓕ
P5527	C-2	©
P5527	B-4	Ⓕ
P5708	C-2	©
P5708	C-5	Ⓕ

ADDRESS INFORMATION
© ... COMPONENT SIDE
Ⓕ ... FOIL SIDE

REVERSE SIDE
SERIAL I/F, SERIAL I/O

SERIAL I/F P.C. BOARD (VEP88098A)

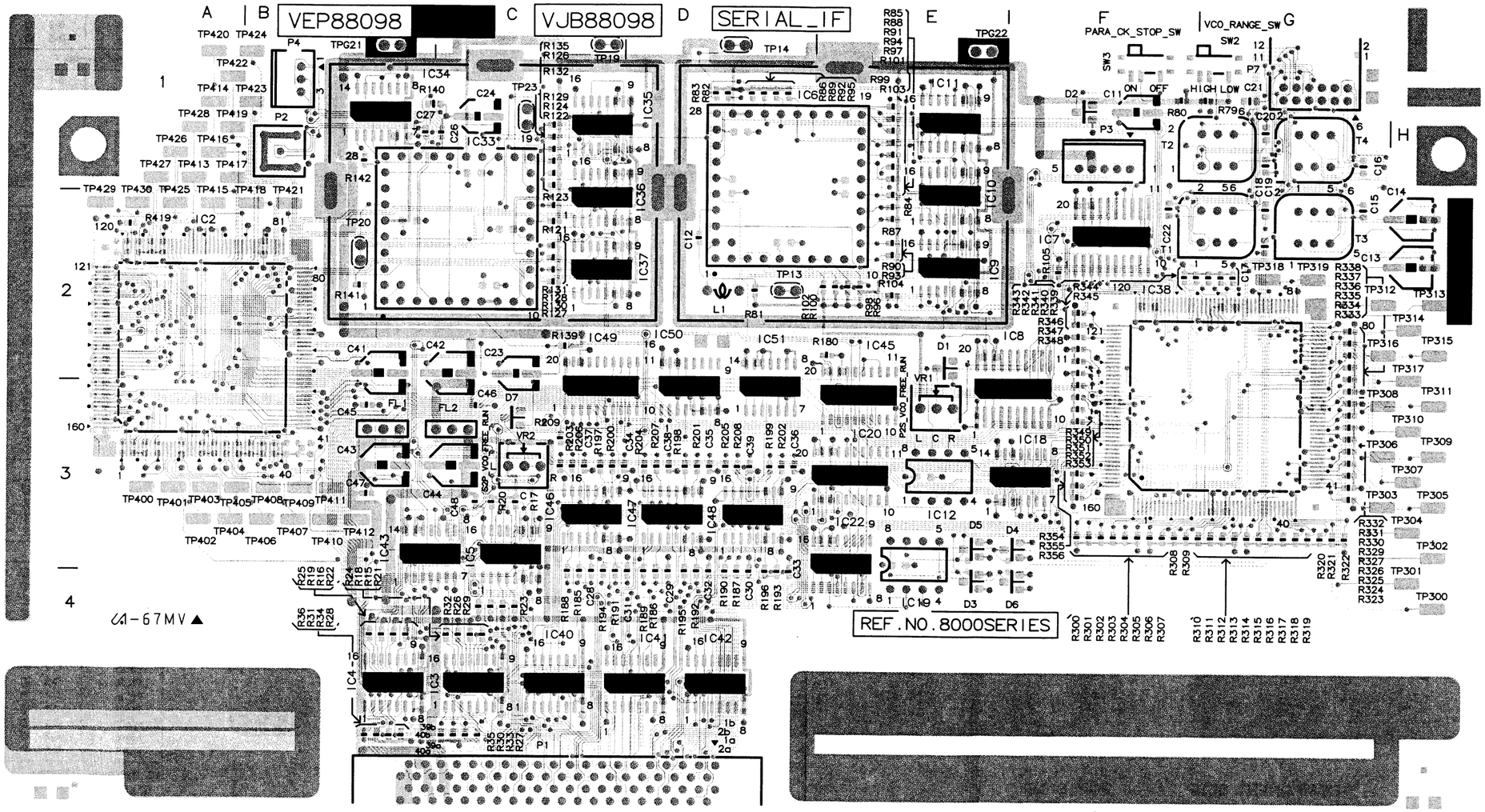

COMPONENT SIDE

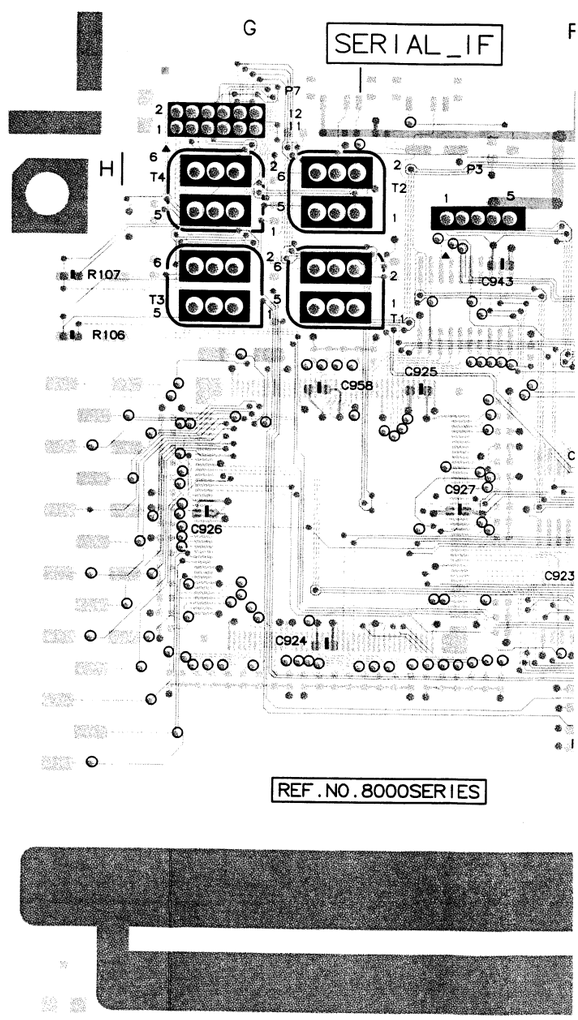

FOIL SIDE

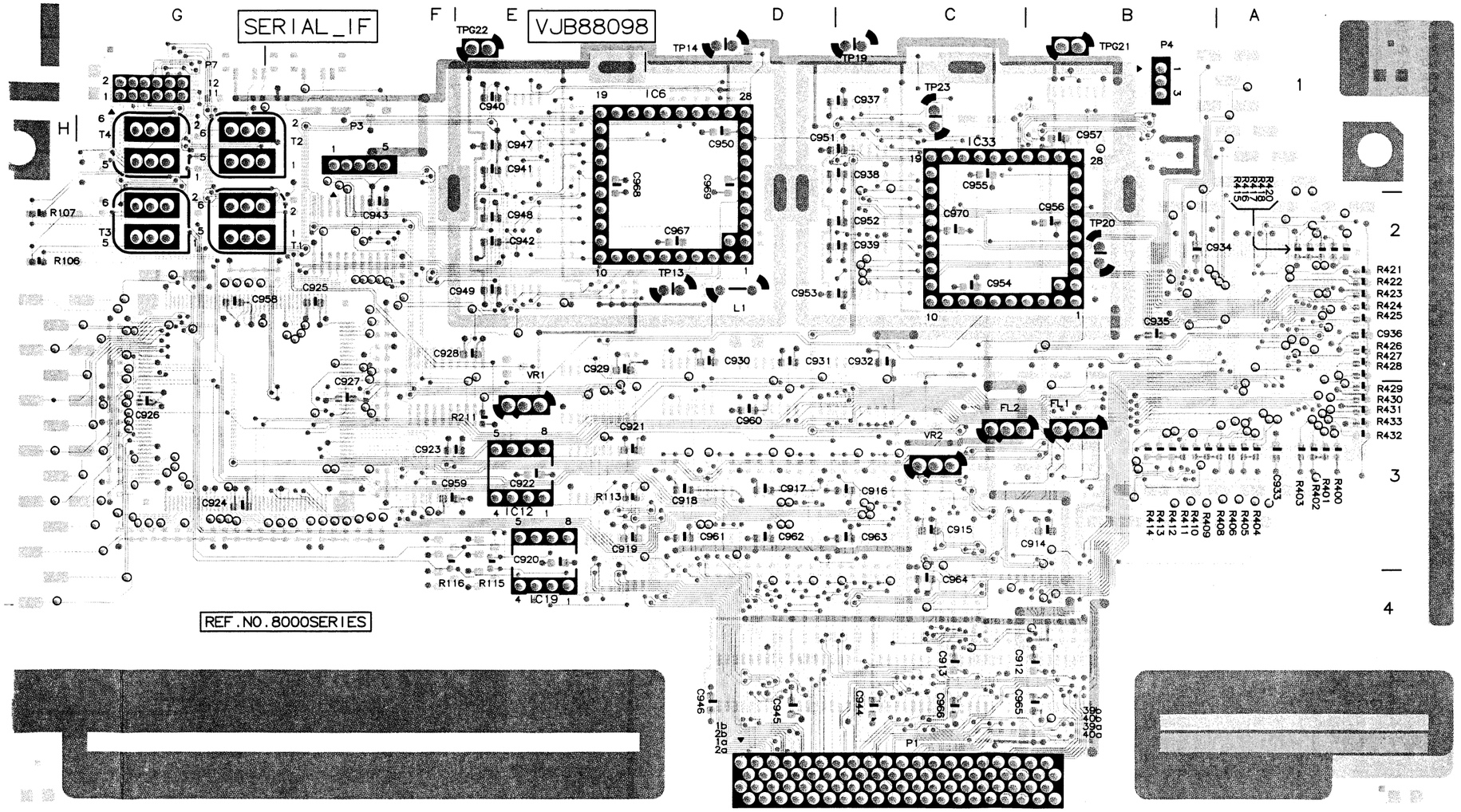

FOIL SIDE

SERIAL I/F		
Integrated Circuits		
IC8002	A-2	©
IC8003	C-4	©
IC8004	B-4	©
IC8005	C-3	©
IC8006	D-1	©
IC8006	D-1	Ⓕ
IC8007	F-2	©
IC8008	F-2	©
IC8009	E-2	©
IC8010	E-1	©
IC8011	E-1	©
IC8012	E-3	©
IC8012	E-3	Ⓕ
IC8018	F-3	©
IC8019	E-4	©
IC8019	E-4	Ⓕ
IC8020	E-3	©
IC8022	E-3	©
IC8033	C-1	©
IC8033	C-1	Ⓕ
IC8034	B-1	©
IC8035	D-1	©
IC8036	D-2	©
IC8037	D-2	©
IC8038	F-2	©
IC8040	C-4	©
IC8041	D-4	©
IC8042	D-4	©
IC8043	B-3	©
IC8045	E-2	©
IC8046	C-3	©
IC8047	D-3	©
IC8048	D-3	©
IC8049	C-2	©
IC8050	D-2	©
IC8051	D-2	©
Test Points		
TP8013	D-2	©
TP8013	D-2	Ⓕ
TP8014	D-1	©
TP8014	D-1	Ⓕ
TP8019	C-1	©
TP8019	C-1	Ⓕ
TP8020	B-2	©
TP8020	B-2	Ⓕ
TP8023	C-1	©
TP8023	C-1	Ⓕ
TP8300	H-4	©
TP8301	H-3	©
TP8302	H-3	©
TP8303	G-3	©
TP8304	H-3	©
TP8305	H-3	©
TP8306	G-3	©
TP8307	H-3	©
TP8308	G-3	©
TP8309	H-3	©
TP8310	H-3	©
TP8311	H-3	©
TP8312	G-2	©
TP8313	H-2	©
TP8314	H-2	©
TP8315	H-2	©
TP8316	G-2	©
TP8317	H-2	©
TP8318	G-2	©
TP8319	G-2	©
TP8400	A-3	©
TP8401	A-3	©
TP8402	A-3	©
TP8403	A-3	©
TP8404	A-3	©
TP8405	A-3	©
TP8406	B-3	©
TP8407	B-3	©
TP8408	B-3	©
TP8409	B-3	©
TP8410	B-3	©
TP8411	B-3	©
TP8412	B-3	©
TP8413	A-1	©
TP8414	A-1	©
TP8415	A-1	©
TP8416	A-1	©
TP8417	A-1	©
TP8418	B-1	©
TP8419	A-1	©
TP8420	A-1	©
TP8421	B-1	©
TP8422	A-1	©
TP8423	A-1	©
TP8424	A-1	©
TP8425	A-1	©
TP8426	A-1	©
TP8427	A-1	©
TP8428	A-1	©
TP8429	A-1	©
TP8430	A-1	©
TGP8021	B-1	©
TGP8021	B-1	Ⓕ
TGP8022	E-1	©
TGP8022	E-1	Ⓕ
Adjustments		
VR8001	E-3	©
VR8001	E-3	Ⓕ
VR8002	C-3	©
VR8002	C-3	Ⓕ
Switches		
SW8002	G-1	©
SW8003	F-1	©
Connectors		
P8001	C-4	©
P8001	C-4	Ⓕ
P8002	B-1	©
P8003	F-1	©
P8003	F-1	Ⓕ
P8004	B-1	©
P8004	B-1	Ⓕ
P8007	G-1	©
P8007	G-1	Ⓕ

ADDRESS INFORMATION
© ... COMPONENT SIDE
Ⓕ ... FOIL SIDE

B

A

SERIAL I/O P.C. BOARD (VEP88106A)

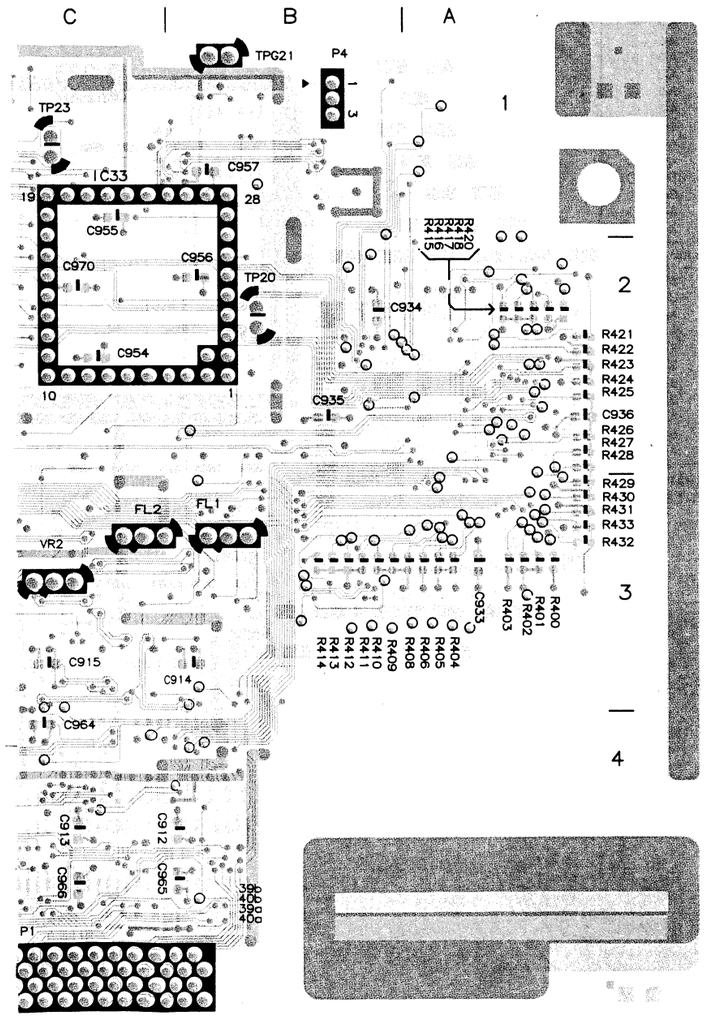

SERIAL I/F		
Integrated Circuits		
IC8002	A-2	©
IC8003	C-4	©
IC8004	B-4	©
IC8005	C-3	©
IC8006	D-1	©
IC8006	D-1	Ⓕ
IC8007	F-2	©
IC8008	F-2	©
IC8009	E-2	©
IC8010	E-1	©
IC8011	E-1	©
IC8012	E-3	©
IC8012	E-3	Ⓕ
IC8018	F-3	©
IC8019	E-4	©
IC8019	E-4	Ⓕ
IC8020	E-3	©
IC8022	E-3	©
IC8033	C-1	©
IC8033	C-1	Ⓕ
IC8034	B-1	©
IC8035	D-1	©
IC8036	D-2	©
IC8037	D-2	©
IC8038	F-2	©
IC8040	C-4	©
IC8041	D-4	©
IC8042	D-4	©
IC8043	B-3	©
IC8045	E-2	©
IC8046	C-3	©
IC8047	D-3	©
IC8048	D-3	©
IC8049	C-2	©
IC8050	D-2	©
IC8051	D-2	©
Test Points		
TP8013	D-2	©
TP8013	D-2	Ⓕ
TP8014	D-1	©
TP8014	D-1	Ⓕ
TP8019	C-1	©
TP8019	C-1	Ⓕ
TP8020	B-2	©
TP8020	B-2	Ⓕ
TP8023	C-1	©
TP8023	C-1	Ⓕ
TP8300	H-4	©
TP8301	H-3	©
TP8302	H-3	©
TP8303	G-3	©
TP8304	H-3	©
TP8305	H-3	©
TP8306	G-3	©
TP8307	H-3	©
TP8308	G-3	©
TP8309	H-3	©
TP8310	H-3	©
TP8311	H-3	©
TP8312	G-2	©
TP8313	H-2	©
TP8314	H-2	©
TP8315	H-2	©
TP8316	G-2	©
TP8317	H-2	©
TP8318	G-2	©
TP8319	G-2	©
TP8400	A-3	©
TP8401	A-3	©
TP8402	A-3	©
TP8403	A-3	©
TP8404	A-3	©
TP8405	A-3	©
TP8406	B-3	©
TP8407	B-3	©
TP8408	B-3	©
TP8409	B-3	©
TP8410	B-3	©
TP8411	B-3	©
TP8412	B-3	©
TP8413	A-1	©
TP8414	A-1	©
TP8415	A-1	©
TP8416	A-1	©
TP8417	A-1	©
TP8418	B-1	©
TP8419	A-1	©
TP8420	A-1	©
TP8421	B-1	©
TP8422	A-1	©
TP8423	A-1	©
TP8424	A-1	©
TP8425	A-1	©
TP8426	A-1	©
TP8427	A-1	©
TP8428	A-1	©
TP8429	A-1	©
TP8430	A-1	©
TGP8021	B-1	©
TGP8021	B-1	Ⓕ
TGP8022	E-1	©
TGP8022	E-1	Ⓕ
Adjustments		
VR8001	E-3	©
VR8001	E-3	Ⓕ
VR8002	C-3	©
VR8002	C-3	Ⓕ
Switches		
SW8002	G-1	©
SW8003	F-1	©
Connectors		
P8001	C-4	©
P8001	C-4	Ⓕ
P8002	B-1	©
P8003	F-1	©
P8003	F-1	Ⓕ
P8004	B-1	©
P8004	B-1	Ⓕ
P8007	G-1	©
P8007	G-1	Ⓕ

ADDRESS INFORMATION
© ... COMPONENT SIDE
Ⓕ ... FOIL SIDE

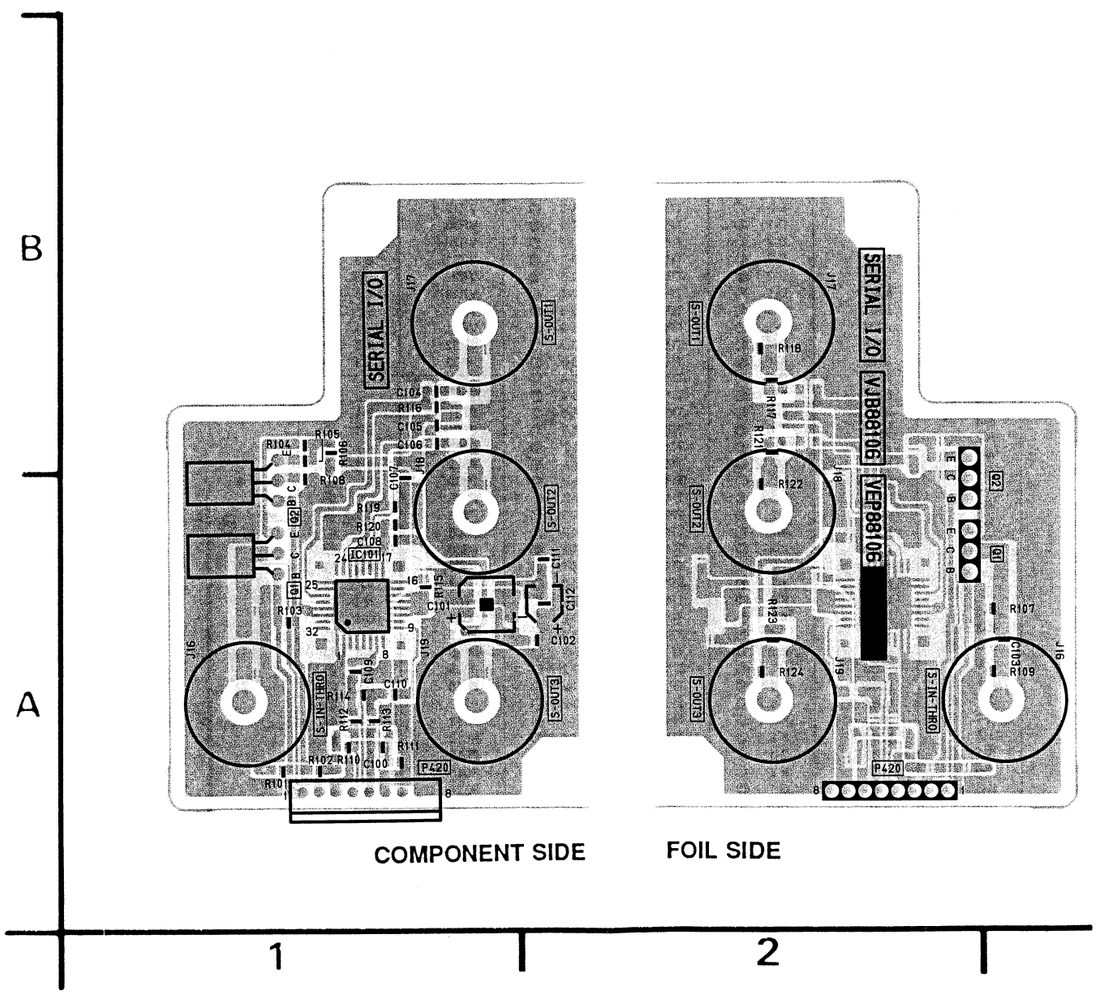

SERVO CONTROL P.C. BOARD (VEP82097A)

SERVO CONTROL					
Transistors		IC12	B-2 ©	P8	B-1 ©
Q1	B-3 Ⓕ	IC13	A-2 ©	P8	B-3 Ⓕ
Integrated Circuits		IC14	A-1 ©	P9	A-1 ©
IC1	A-1 ©	IC15	A-2 ©	P9	A-3 Ⓕ
IC1	A-3 Ⓕ	**Connectors**		**Test Points**	
IC2	B-1 ©	P1	B-2 ©	TP1	B-2 ©
IC2	B-3 Ⓕ	P1	B-2 Ⓕ	TP1	B-2 Ⓕ
IC3	B-1 ©	P2	B-2 ©	TP2	B-2 ©
IC3	B-3 Ⓕ	P2	B-2 Ⓕ	TP2	B-3 Ⓕ
IC4	B-3 Ⓕ	P3	A-2 ©	TPG	B-1 ©
IC5	A-3 Ⓕ	P3	A-3 Ⓕ	TPG	B-3 Ⓕ
IC6	B-3 Ⓕ	P4	B-2 ©	**Adjustments**	
IC7	B-3 Ⓕ	P4	A-2 Ⓕ	VR1	B-2 ©
IC8	B-2 ©	P6	A-2 ©	VR1	B-3 Ⓕ
IC9	B-1 ©	P6	A-2 Ⓕ	VR2	B-1 ©
IC10	B-1 ©	P7	A-2 ©	VR2	B-3 Ⓕ
IC11	A-1 ©	P7	A-2 Ⓕ		

ADDRESS INFORMATION
© ... COMPONENT SIDE
Ⓕ ... FOIL SIDE

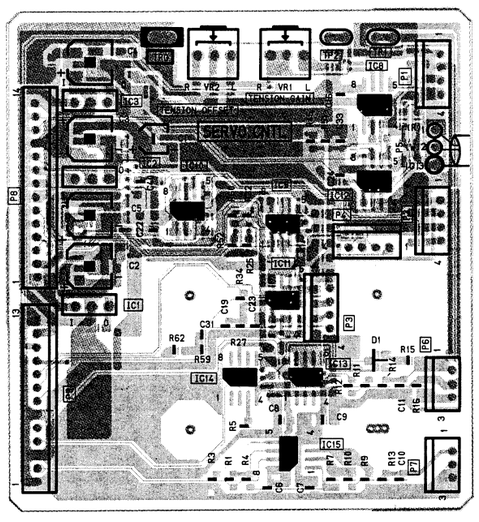

COMPONENT SIDE

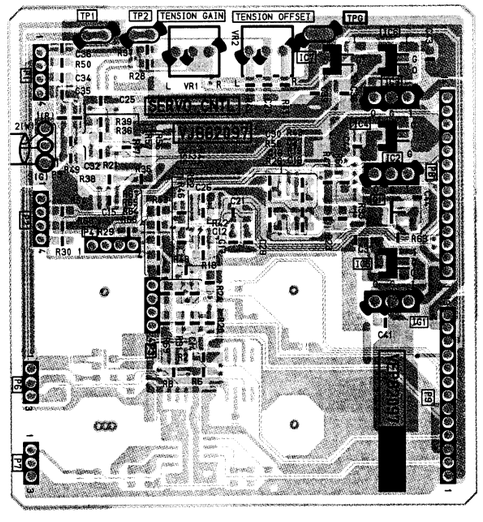

FOIL SIDE

MECHANISM INTERFACE P.C. BOARD (VEP80788A)

P80788A)

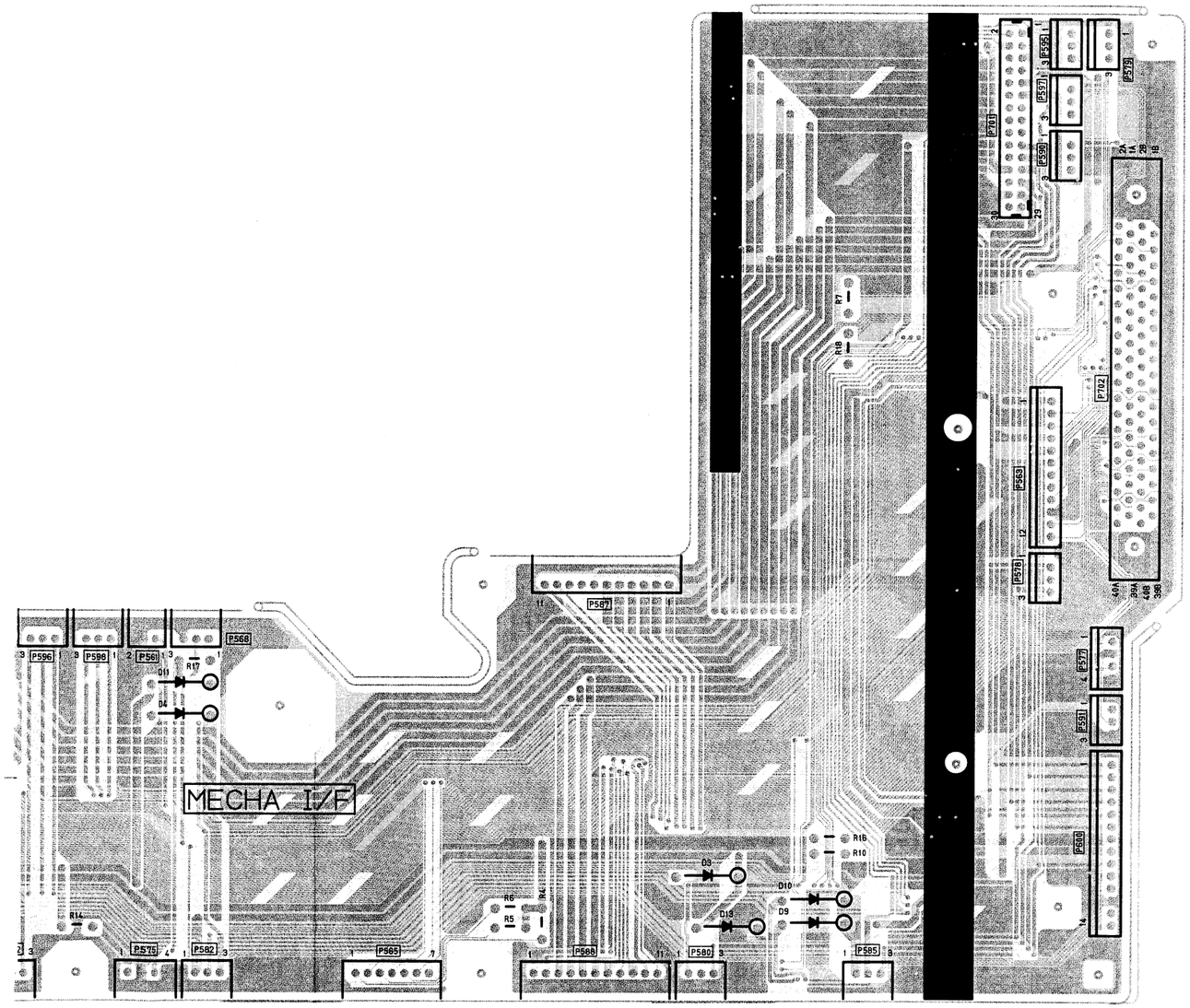

COMPONENT SIDE

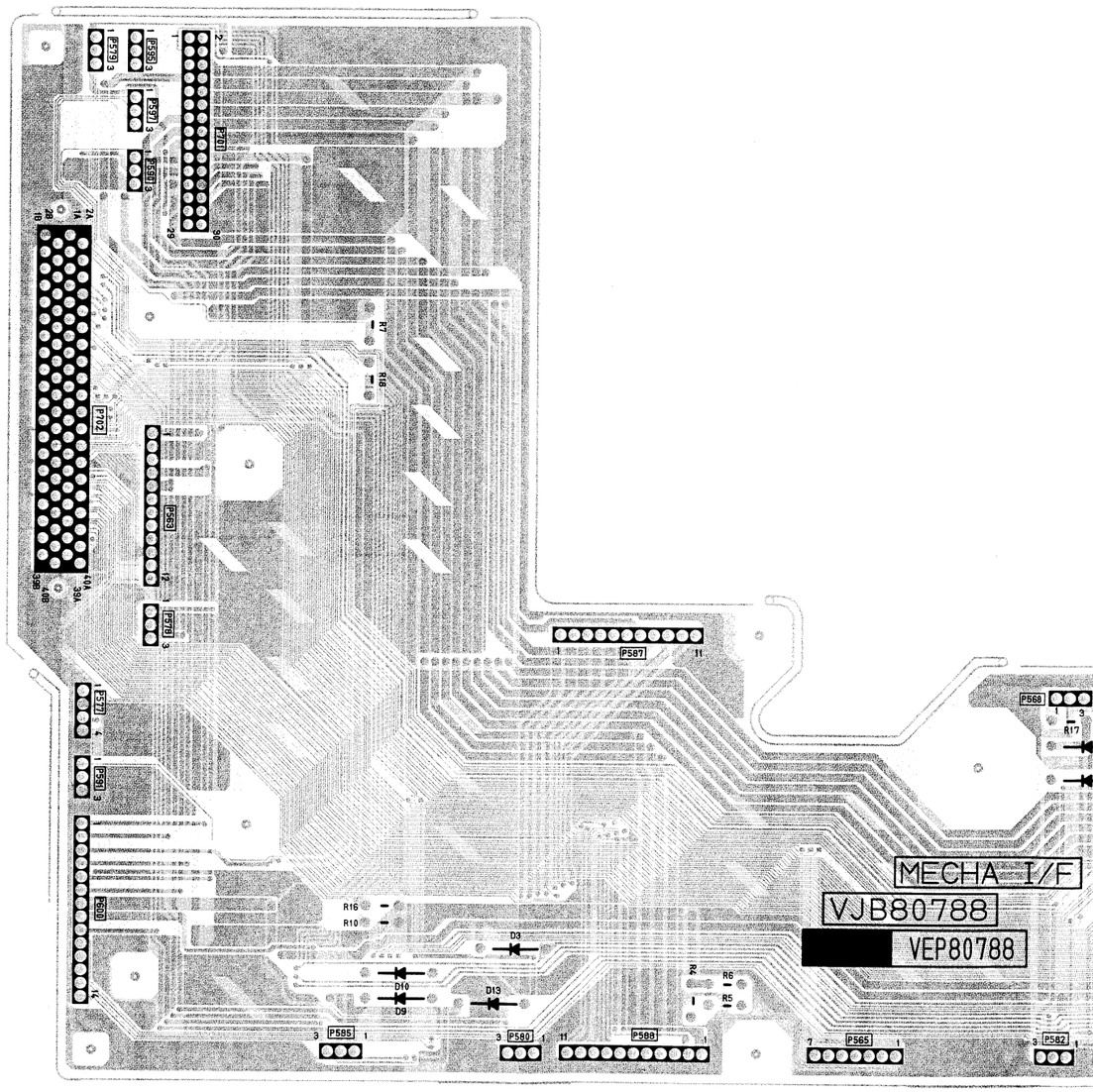

FOIL SIDE

3 4 5 6 7 8 9

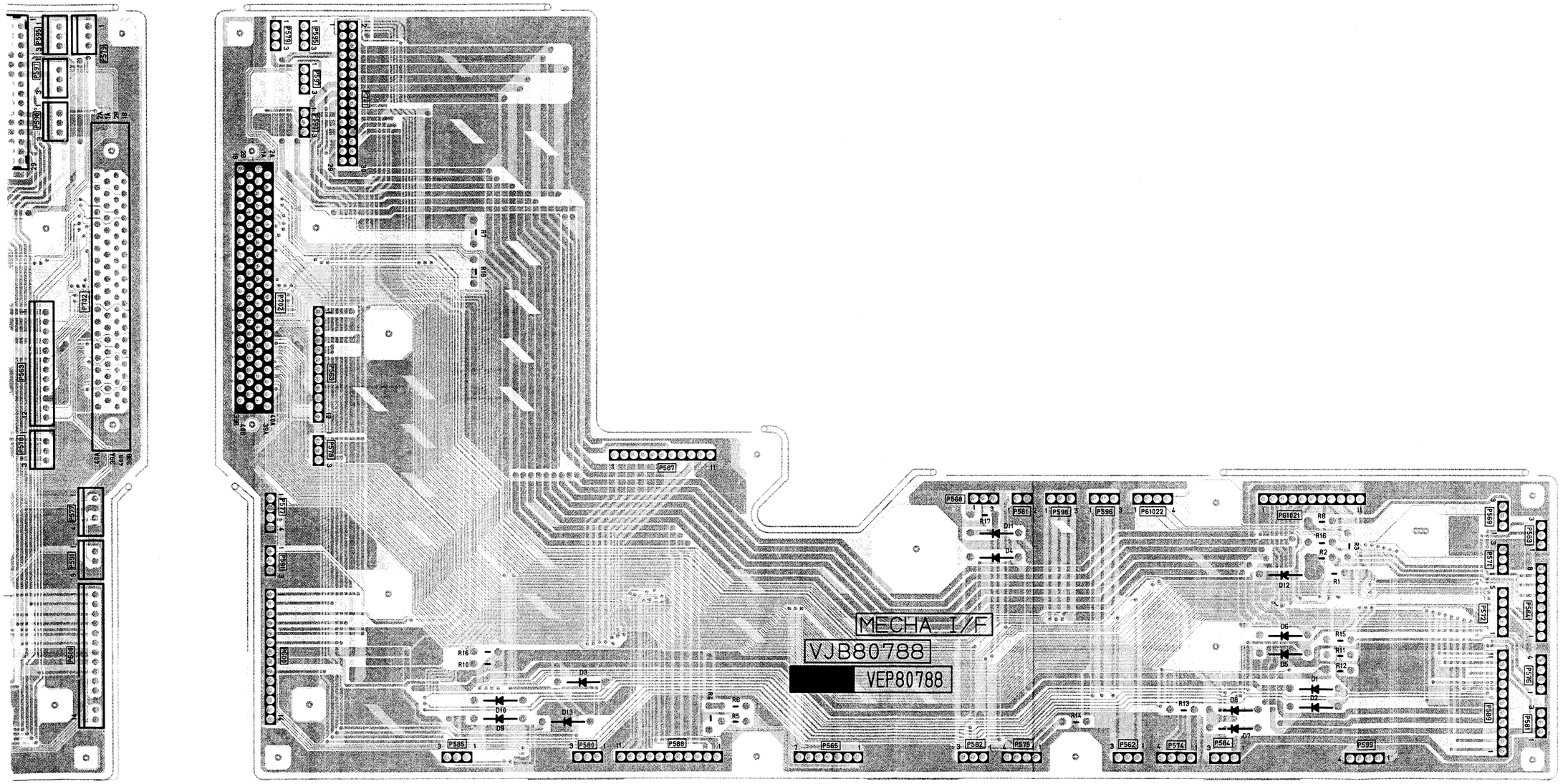

IPONENT SIDE

FOIL SIDE

6 7 8 9 10 11

MECHANISM INTERFACE	
Connectors	
P561	B-3 ©
P561	B-9 Ⓕ
P562	A-2 ©
P562	A-9 Ⓕ
P563	B-5 ©
P563	B-6 Ⓕ
P564	A-1 ©
P564	A-11 Ⓕ
P565	A-3 ©
P565	A-8 Ⓕ
P568	B-3 ©
P568	B-9 Ⓕ
P569	B-1 ©
P569	B-11 Ⓕ
P571	B-1 ©
P571	B-11 Ⓕ
P572	A-1 ©
P572	A-11 Ⓕ
P574	A-2 ©
P574	A-10 Ⓕ
P575	A-3 ©
P575	A-9 Ⓕ
P576	A-1 ©
P576	A-11 Ⓕ
P577	B-5 ©
P577	B-6 Ⓕ
P578	B-5 ©
P578	B-6 Ⓕ
P579	C-6 ©
P579	C-6 Ⓕ
P580	A-4 ©
P580	A-7 Ⓕ
P581	A-1 ©
P581	A-11 Ⓕ
P582	A-3 ©
P582	A-9 Ⓕ
P583	B-1 ©
P583	B-11 Ⓕ
P584	A-2 ©
P584	A-10 Ⓕ
P585	A-5 ©
P585	A-7 Ⓕ
P587	B-4 ©
P587	B-8 Ⓕ
P588	A-4 ©
P588	A-8 Ⓕ
P589	A-1 ©
P589	A-11 Ⓕ
P590	C-5 ©
P590	C-6 Ⓕ
P591	A-5 ©
P591	A-6 Ⓕ
P595	C-5 ©
P595	C-6 Ⓕ
P596	B-2 ©
P596	B-9 Ⓕ
P597	C-5 ©
P597	C-6 Ⓕ
P598	B-3 ©
P598	B-9 Ⓕ
P599	A-1 ©
P599	A-10 Ⓕ
P600	A-5 ©
P600	A-6 Ⓕ
P701	C-5 ©
P701	C-6 Ⓕ
P702	B-6 ©
P702	B-6 Ⓕ
P61021	B-2 ©
P61021	B-10 Ⓕ
P61022	B-2 ©
P61022	B-9 Ⓕ

ADDRESS INFORMATION
©... COMPONENT SIDE
Ⓕ... FOIL SIDE

REVERSE SIDE
POWER 1/POWER 1 SUB

POWER 1 P.C. BOARD (VEP81067A)

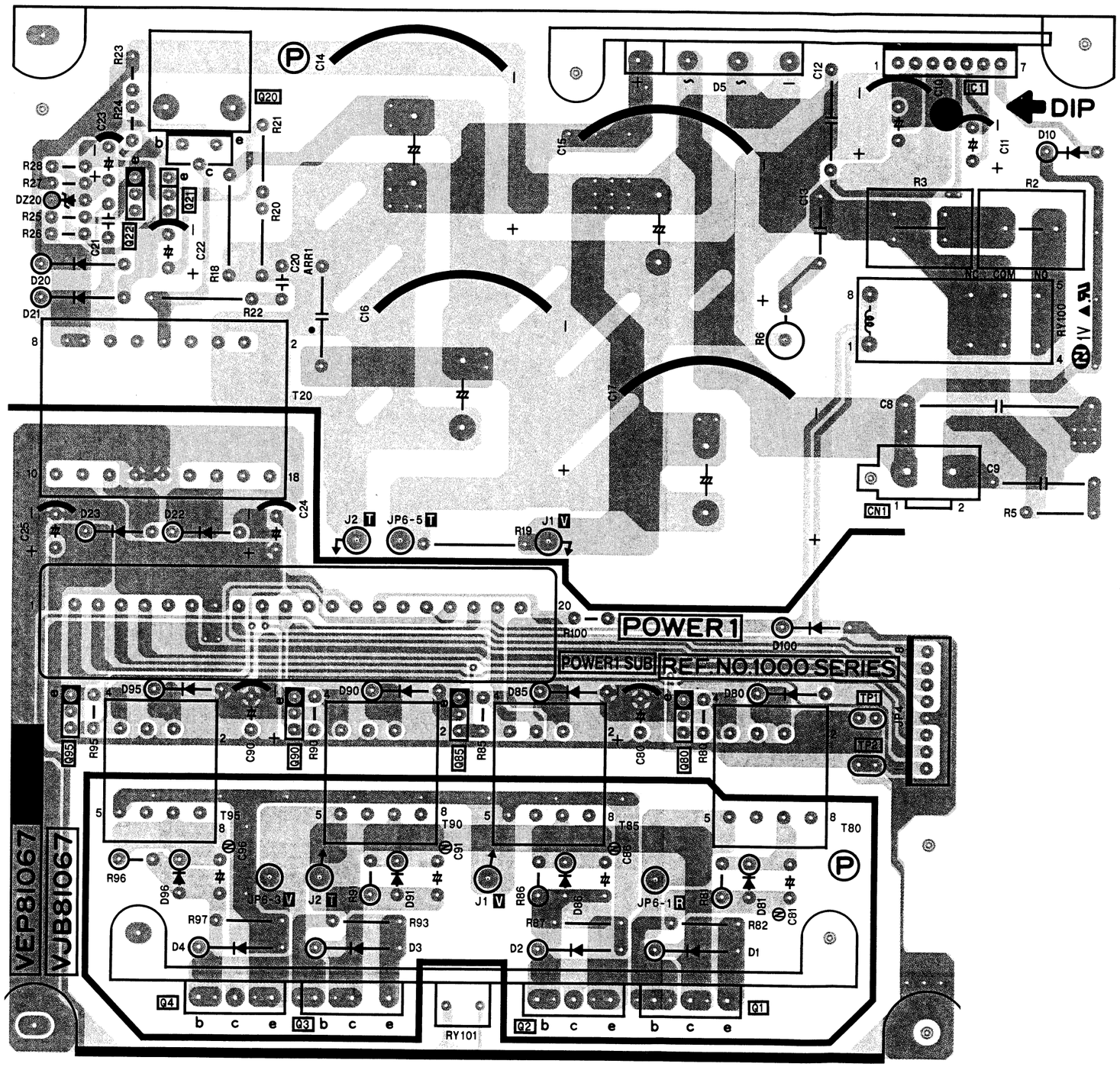

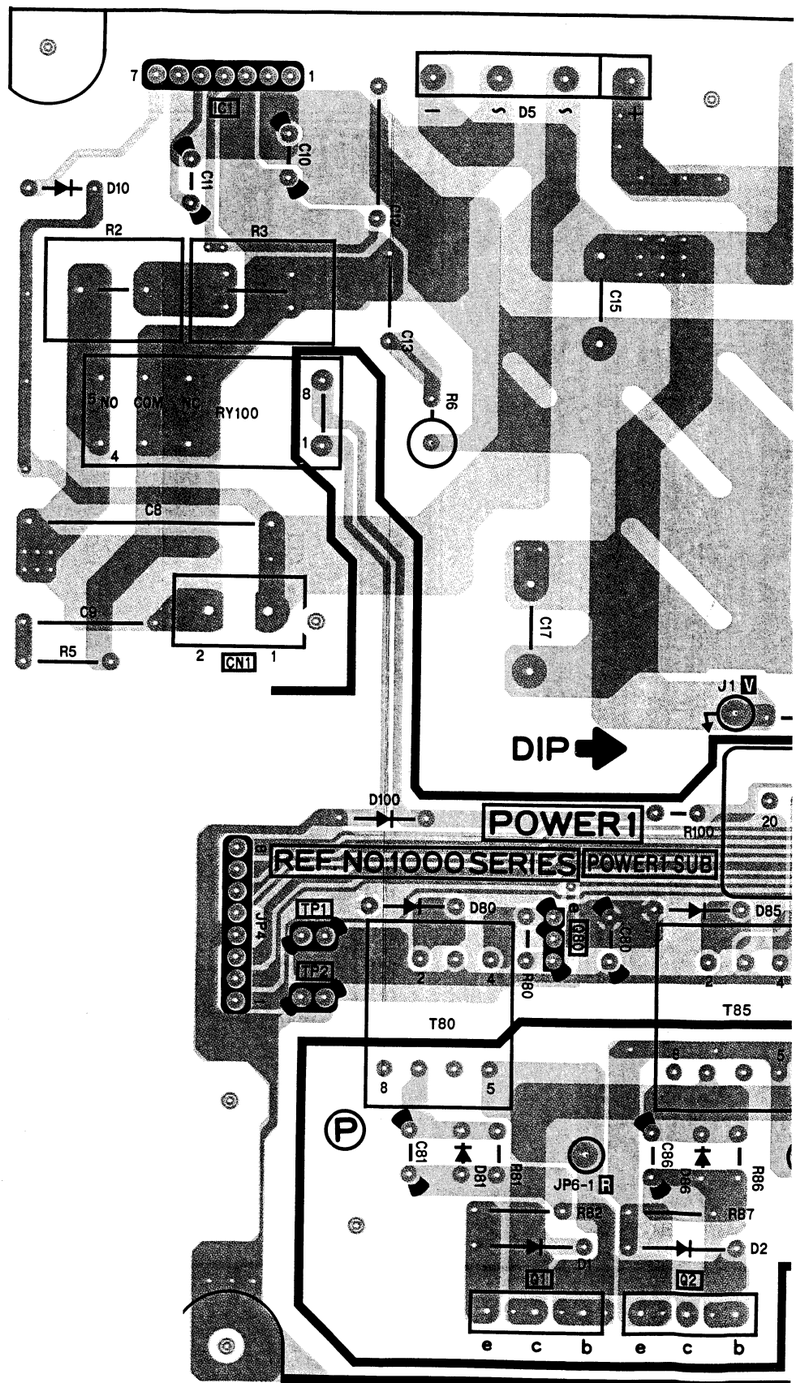

COMPONENT SIDE

FOIL SIDE

POWER 1 SUB P.C. BOARD (VEP81070A)

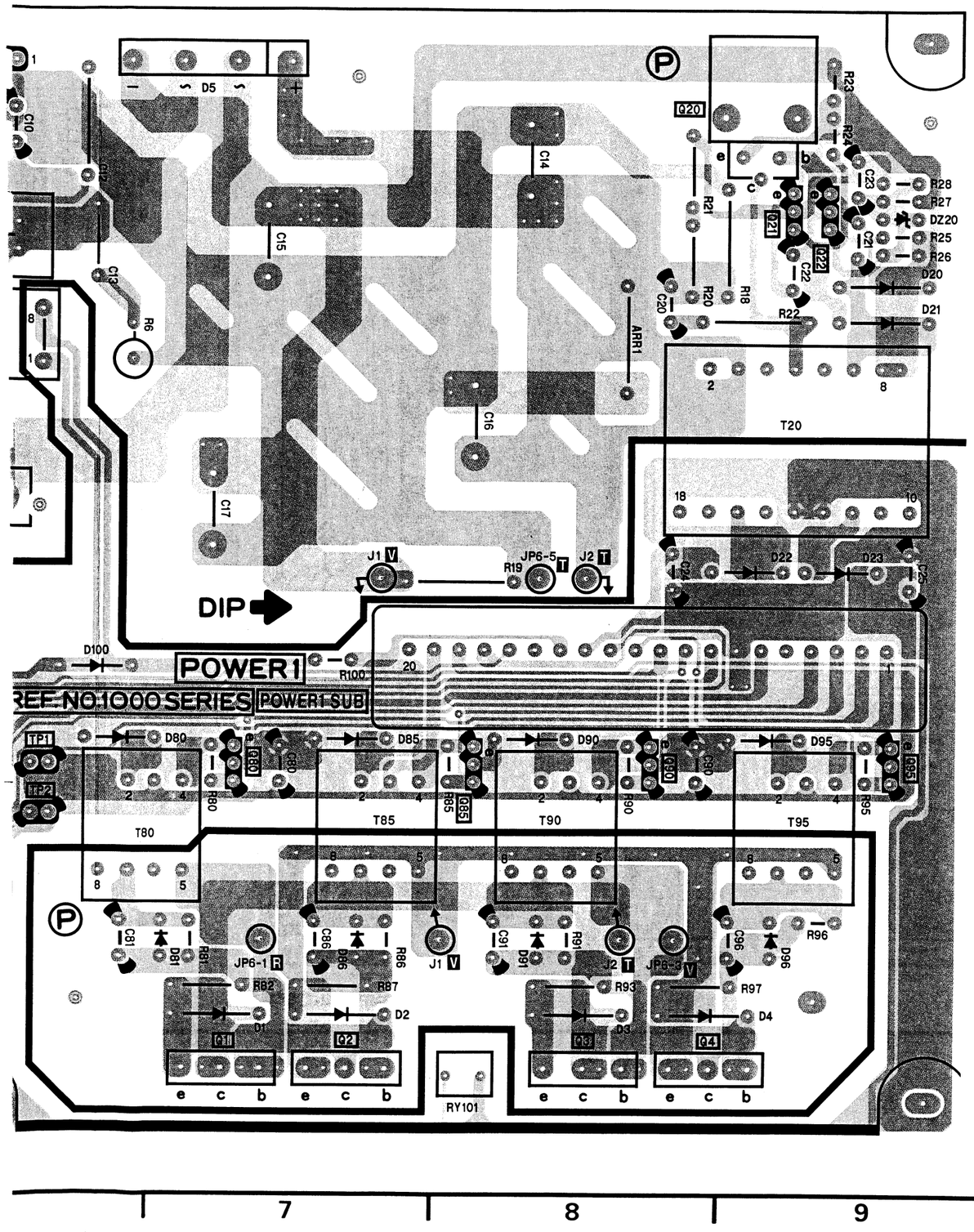

POWER 1		
Transistors		
Q1001	A-4	©
Q1001	A-7	Ⓕ
Q1002	A-3	©
Q1002	A-7	Ⓕ
Q1003	A-2	©
Q1003	A-8	Ⓕ
Q1004	A-1	©
Q1004	A-8	Ⓕ
Q1020	D-2	©
Q1020	D-8	Ⓕ
Q1021	D-1	©
Q1021	D-9	Ⓕ
Q1022	D-1	©
Q1022	D-9	Ⓕ
Q1080	B-3	©
Q1080	B-7	Ⓕ
Q1085	B-2	©
Q1085	B-8	Ⓕ
Q1090	B-2	©
Q1090	B-8	Ⓕ
Q1095	B-1	©
Q1095	B-9	Ⓕ
Integrated Circuits		
IC1001	D-4	©
IC1001	D-6	Ⓕ
IC1101	A-1	©
Test Points		
TP1001	B-4	©
TP1001	B-6	Ⓕ
TP1002	B-4	©
TP1002	B-6	Ⓕ
Connectors		
CN1001	C-4	©
CN1001	C-6	Ⓕ

ADDRESS INFORMATION
© ... COMPONENT SIDE
Ⓕ ... FOIL SIDE

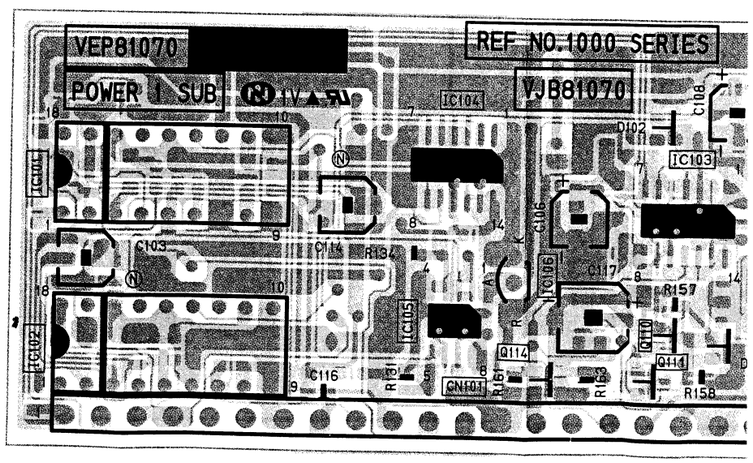

COMPONENT SID

A

1 7 8 9

POWER 1 SUB P.C. BOARD (VEP81070A)

POWER 1	
Transistors	
Q1001	A-4 ©
Q1001	A-7 Ⓕ
Q1002	A-3 ©
Q1002	A-7 Ⓕ
Q1003	A-2 ©
Q1003	A-8 Ⓕ
Q1004	A-1 ©
Q1004	A-8 Ⓕ
Q1020	D-2 ©
Q1020	D-8 Ⓕ
Q1021	D-1 ©
Q1021	D-9 Ⓕ
Q1022	D-1 ©
Q1022	D-9 Ⓕ
Q1080	B-3 ©
Q1080	B-7 Ⓕ
Q1085	B-2 ©
Q1085	B-8 Ⓕ
Q1090	B-2 ©
Q1090	B-8 Ⓕ
Q1095	B-1 ©
Q1095	B-9 Ⓕ
Integrated Circuits	
IC1001	D-4 ©
IC1001	D-6 Ⓕ
IC1101	A-1 ©
Test Points	
TP1001	B-4 ©
TP1001	B-6 Ⓕ
TP1002	B-4 ©
TP1002	B-6 Ⓕ
Connectors	
CN1001	C-4 ©
CN1001	C-6 Ⓕ

ADDRESS INFORMATION
© ... COMPONENT SIDE
Ⓕ ... FOIL SIDE

POWER 1 SUB	
Transistors	
Q1101	A-2 Ⓕ
Q1103	A-2 Ⓕ
Q1104	A-2 Ⓕ
Q1105	A-2 Ⓕ
Q1106	A-2 Ⓕ
Q1107	A-3 Ⓕ
Q1110	A-2 ©
Q1111	A-2 ©
Q1112	A-2 Ⓕ
Q1113	A-3 Ⓕ
Q1114	A-2 ©
Integrated Circuits	
IC1101	A-1 ©
IC1101	A-3 Ⓕ
IC1102	A-1 ©
IC1102	A-3 Ⓕ
IC1103	A-2 ©
IC1104	A-1 ©
IC1105	A-1 ©
IC1106	A-2 ©
IC1106	A-3 Ⓕ
Connectors	
CN1101	A-1 ©
CN1101	A-3 Ⓕ

ADDRESS INFORMATION
© ... COMPONENT SIDE
Ⓕ ... FOIL SIDE

POWER 2	
Transistors	
Q1034	C-5 ©
Q1034	C-5 Ⓕ
Q1037	D-5 ©
Q1037	D-6 Ⓕ
Q1044	D-4 ©
Q1044	D-6 Ⓕ
Q1050	B-2 ©
Q1050	B-8 Ⓕ
Q1054	D-3 ©
Q1054	D-7 Ⓕ
Q1057	D-3 ©
Q1057	D-7 Ⓕ
Q1060	B-4 ©
Q1060	B-6 Ⓕ
Q1064	D-4 ©
Q1064	D-7 Ⓕ
Q1067	D-4 ©
Q1067	D-6 Ⓕ
Q1077	C-2 ©
Q1077	C-9 Ⓕ
Adjustments	
VR1040	D-5 ©
VR1040	D-6 Ⓕ
VR1070	D-2 ©
VR1070	D-8 Ⓕ

ADDRESS INFORMATION
© ... COMPONENT SIDE
Ⓕ ... FOIL SIDE

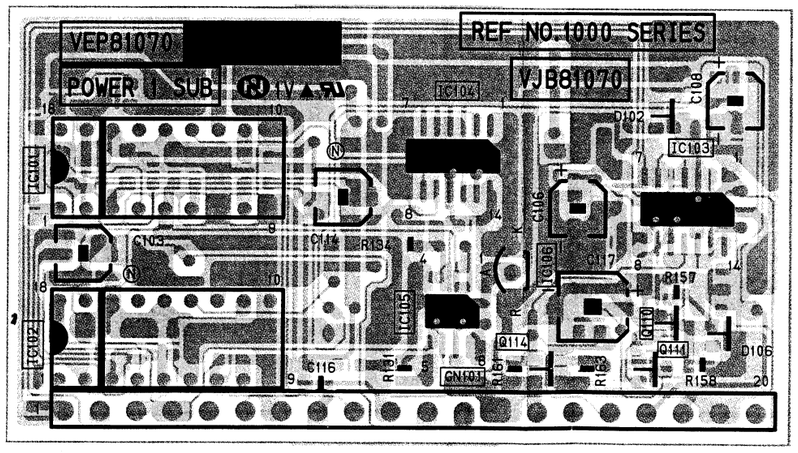

COMPONENT SIDE

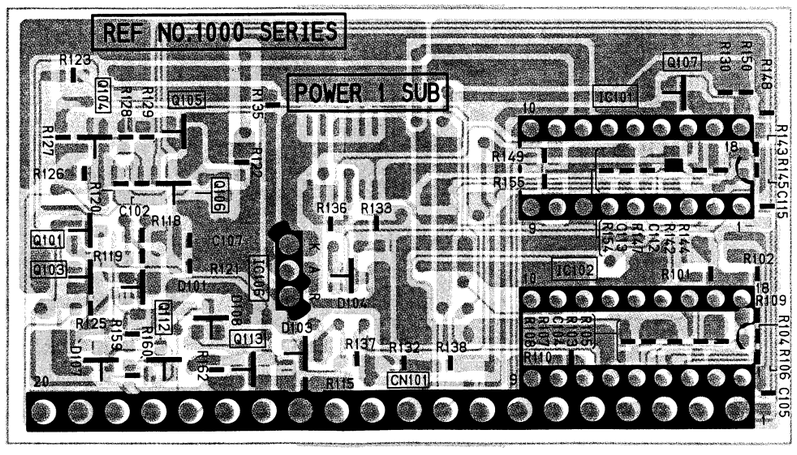

FOIL SIDE

A

1 2 3

POWER 2 P.C. BOARD (VEP81068A)

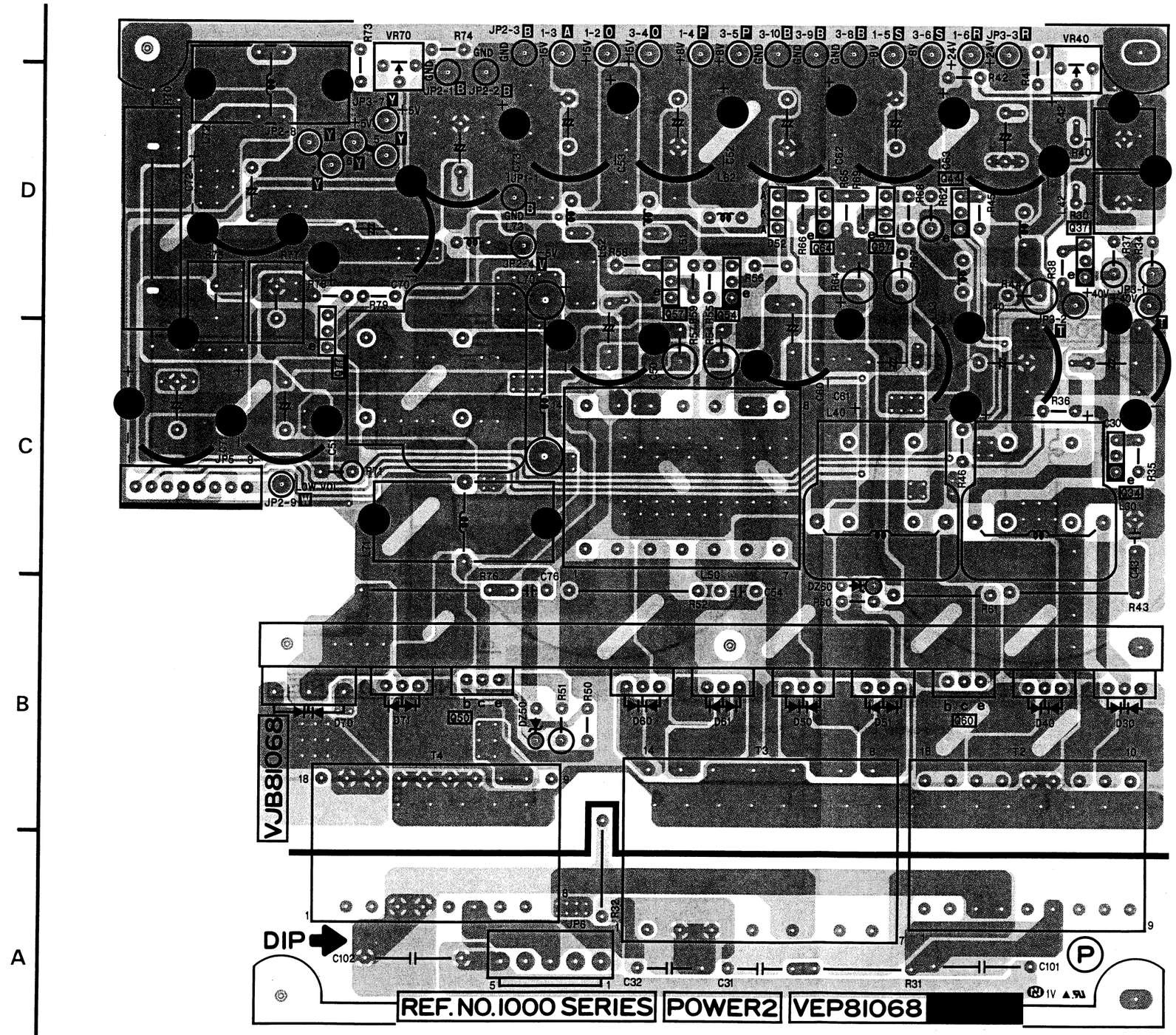

COMPONENT SIDE

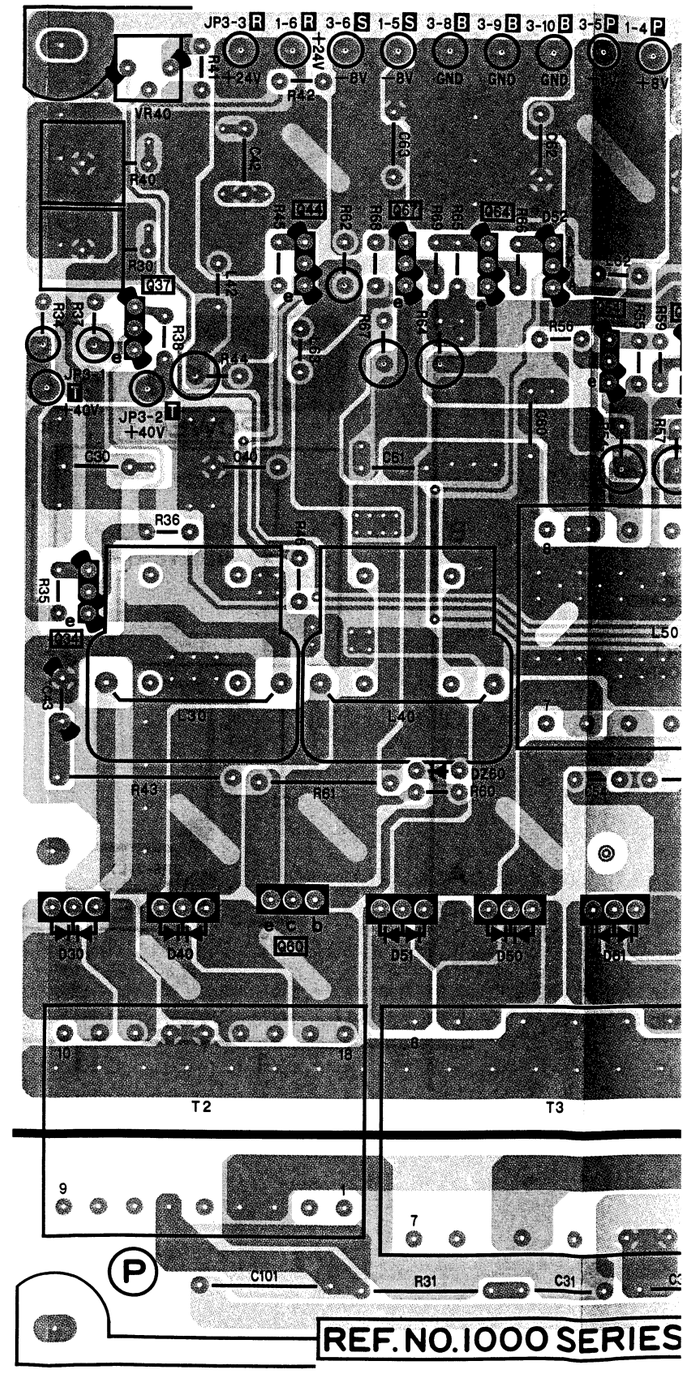

FOIL SIDE

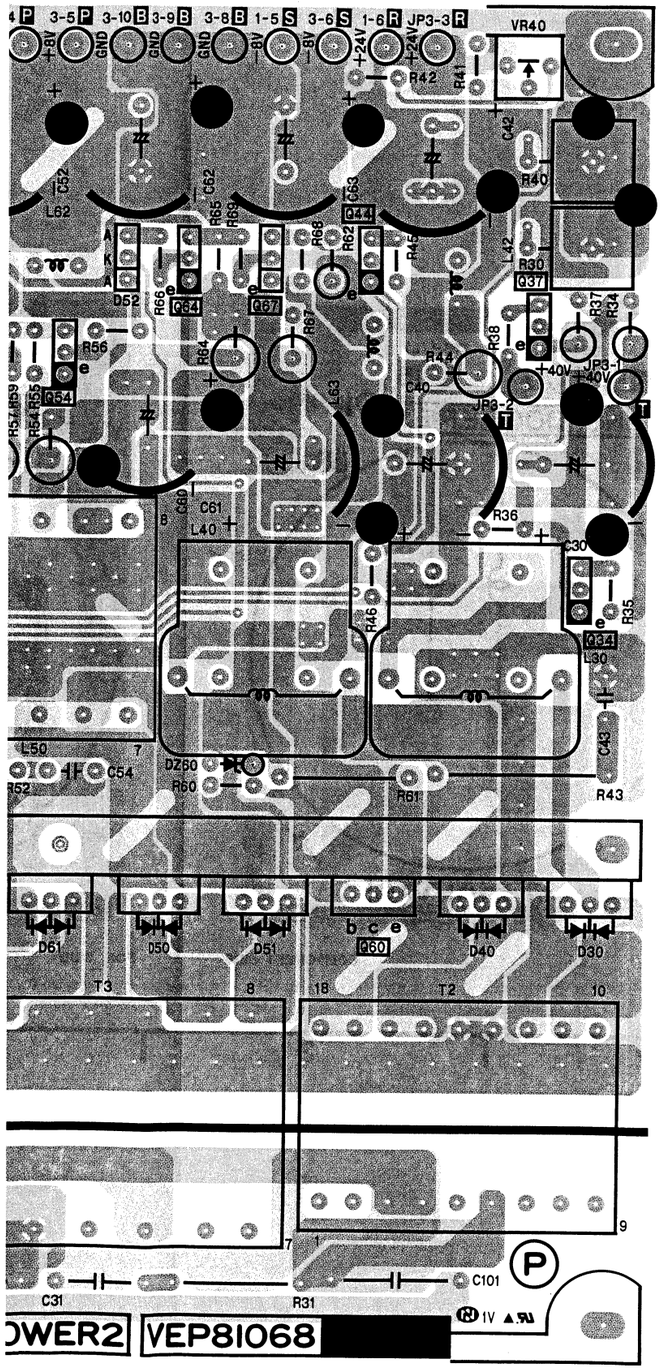

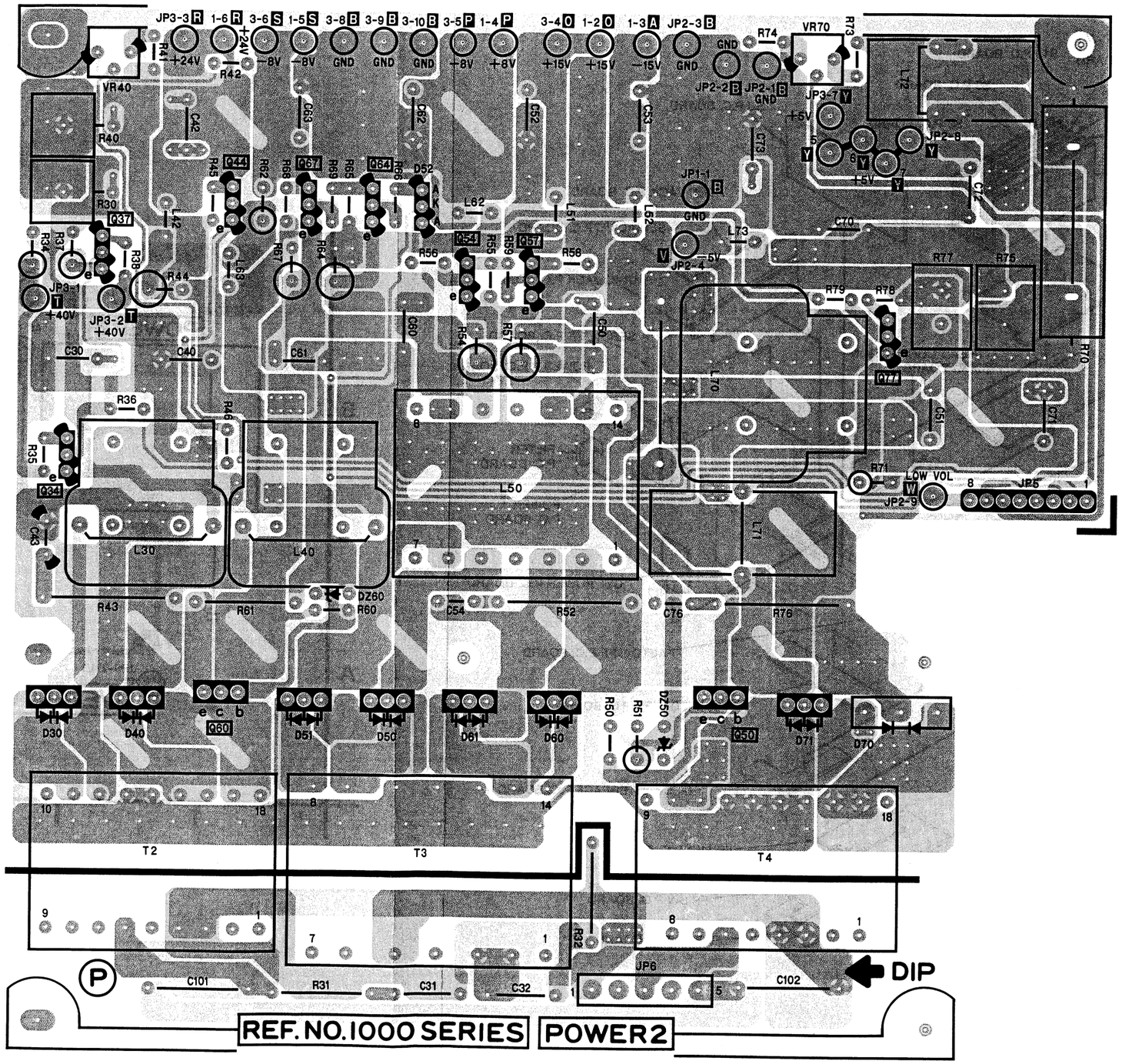

4 5 6 7 8 9

REVERSE SIDE

POWER 3

CIRCUIT BOARD LOCATION

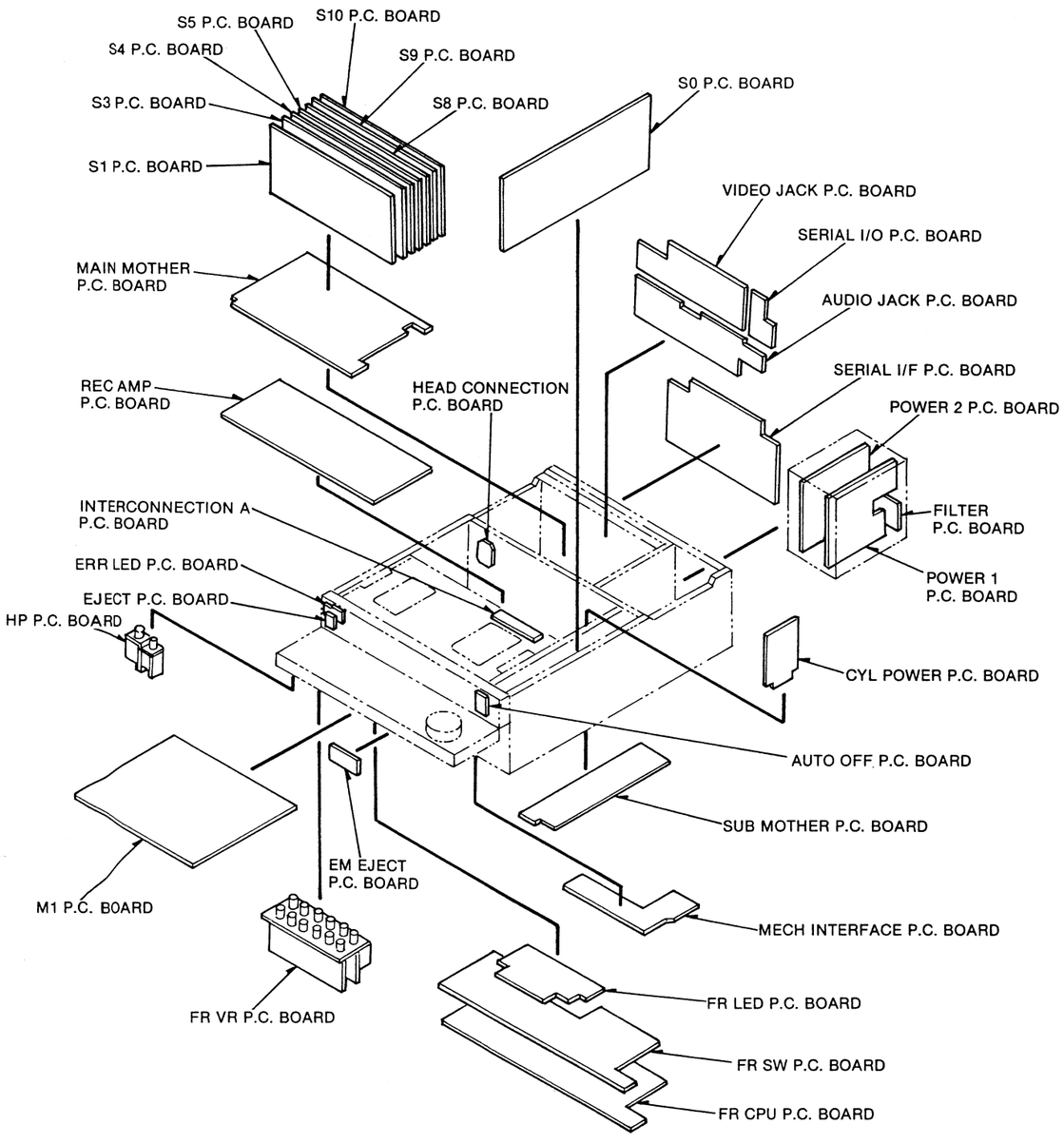

POWER 3 P.C. BOARD (VEP81069A)

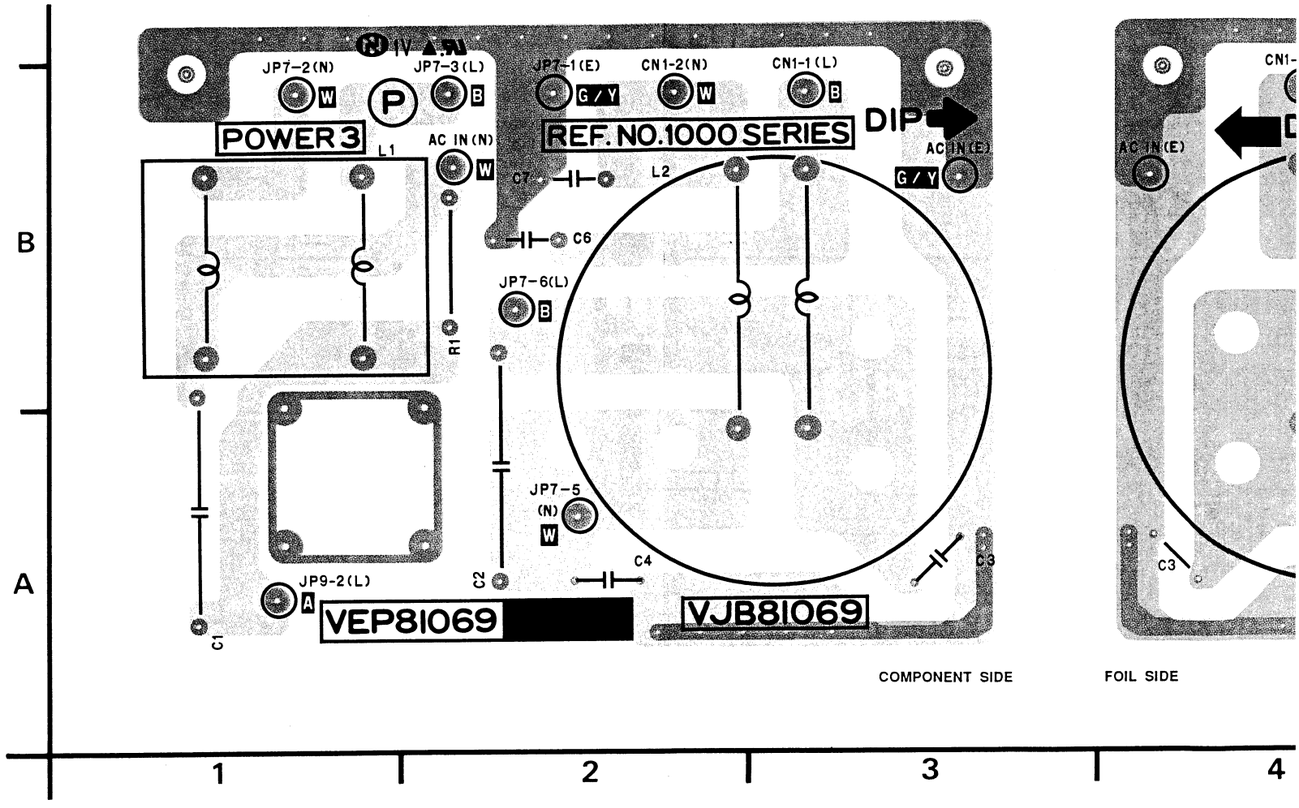

POWER 3 P.C. BOARD (VEP81069A)

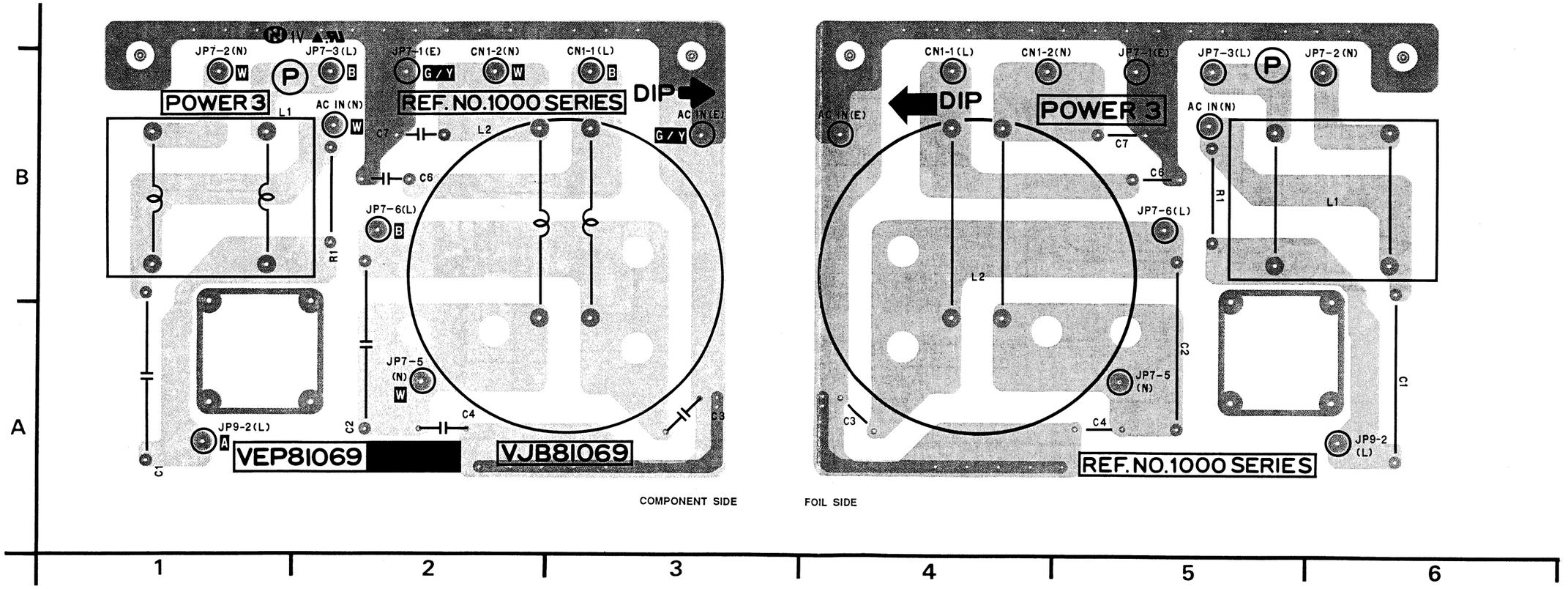

AUTO OFF LED P.C. BOARD (VEP80792A) EJECT P.C. BOARD (VEP80790A) ERROR LED P.C. BOARD (VEP80804A) HP VR P.C. BOARD (VEP86130A) HP JACK P.C. BOARD (VEP86131A)

ERROR LED P.C. BOARD (VEP80804A)

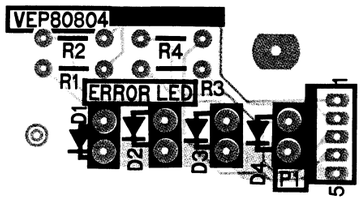

COMPONENT SIDE

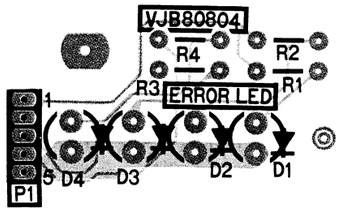

FOIL SIDE

HP VR P.C. BOARD (VEP86130A)

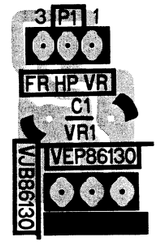

HP JACK P.C. BOARD (VEP86131A)

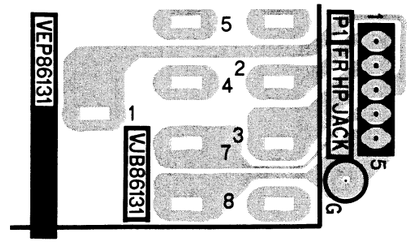

AUTO OFF LED P.C. BOARD (VEP80792A)

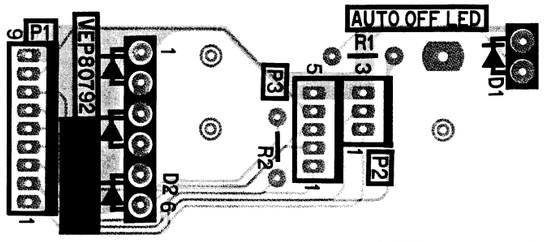

COMPONENT SIDE

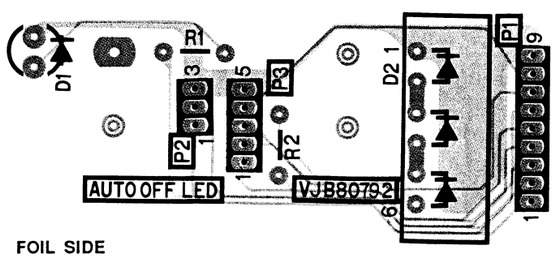

FOIL SIDE

EJECT P.C. BOARD (VEP80790A)

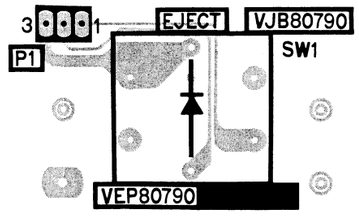

A)

C BOARD (VEP86131A)

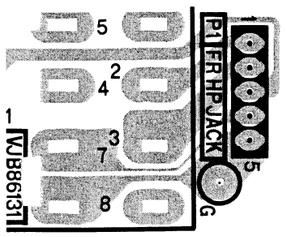

(:P80790A)

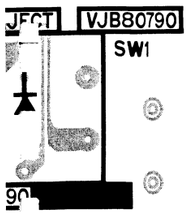

FR LED P.C. BOARD (VEP86128A)

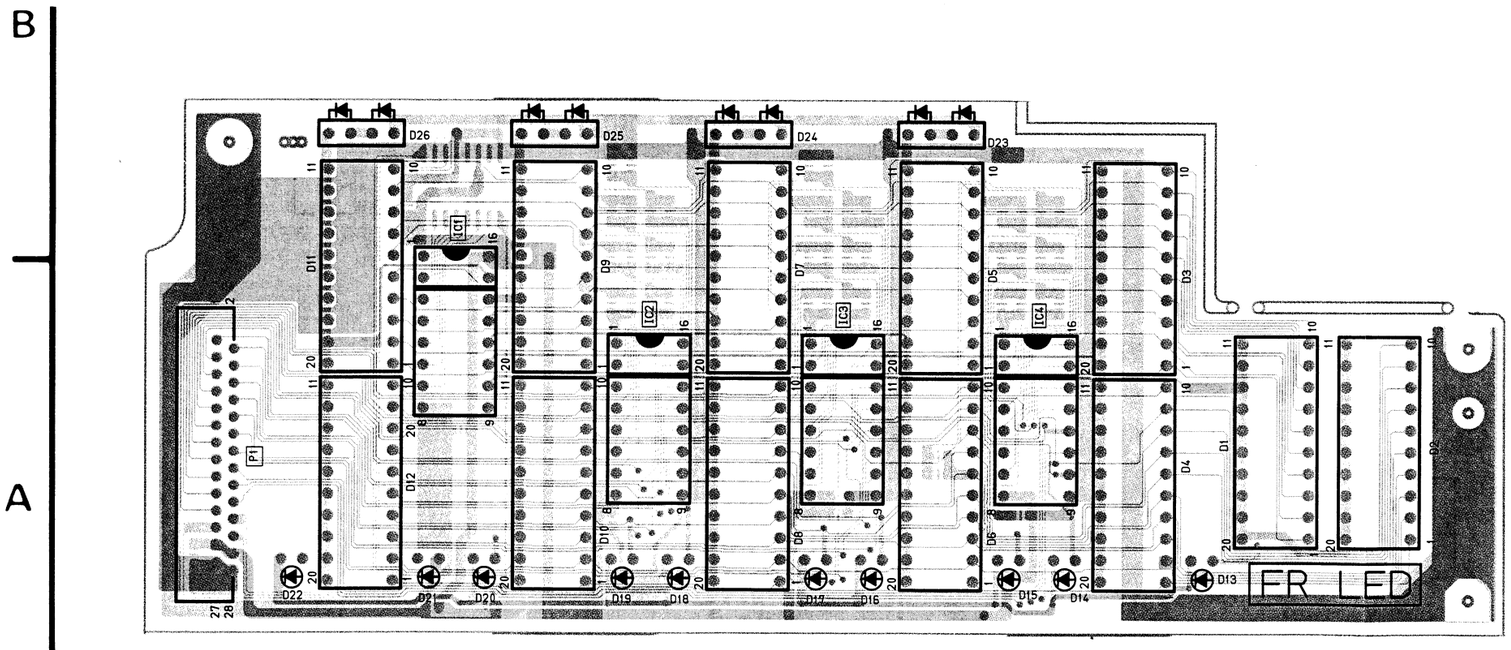

COMPONENT SIDE

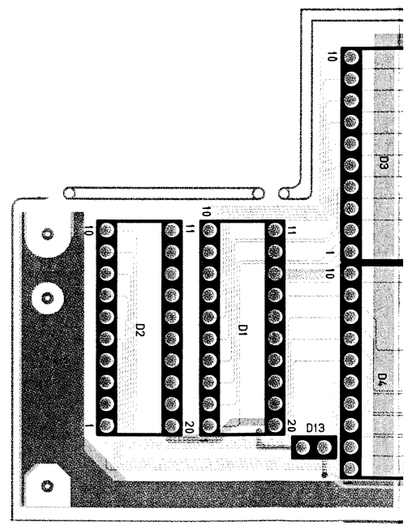

FOIL SIDE

B

A

6 7 1 2 3 4

AUTO OFF LED/EJECT/ERROR LED/ HP VR/HP JACK/FR LED

FR LED	
Transistors	
Q1	A-6 Ⓕ
Integrated Circuits	
IC1	B-1 Ⓒ
IC1	A-6 Ⓕ
IC2	A-2 Ⓒ
IC2	A-6 Ⓕ
IC3	A-2 Ⓒ
IC3	A-5 Ⓕ
IC4	A-3 Ⓒ
IC4	A-5 Ⓕ
IC5	B-6 Ⓕ
Connectors	
P1	A-1 Ⓒ
P1	A-6 Ⓕ

ADDRESS INFORMATION
Ⓒ... COMPONENT SIDE
Ⓕ... FOIL SIDE

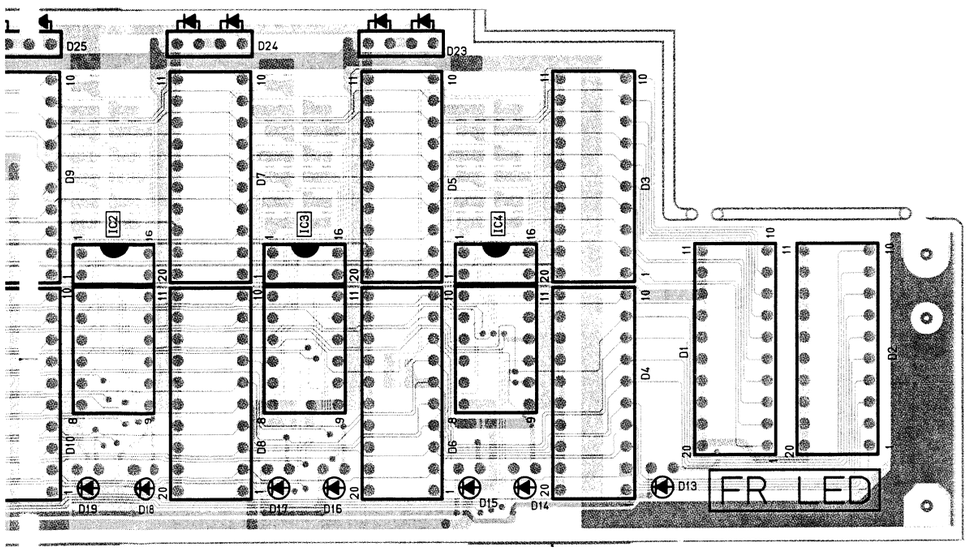

COMPONENT SIDE

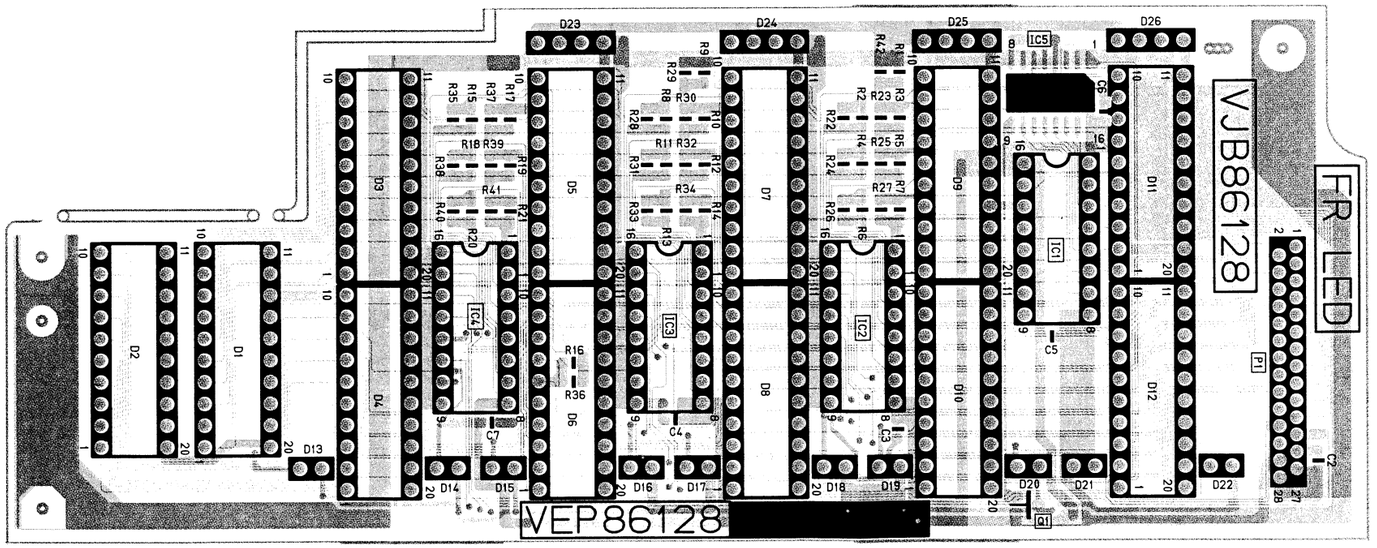

FOIL SIDE

2 3 4 5 6

REVERSE SIDE
FR SW

FR SW P.C. BOARD (VEP86127A)

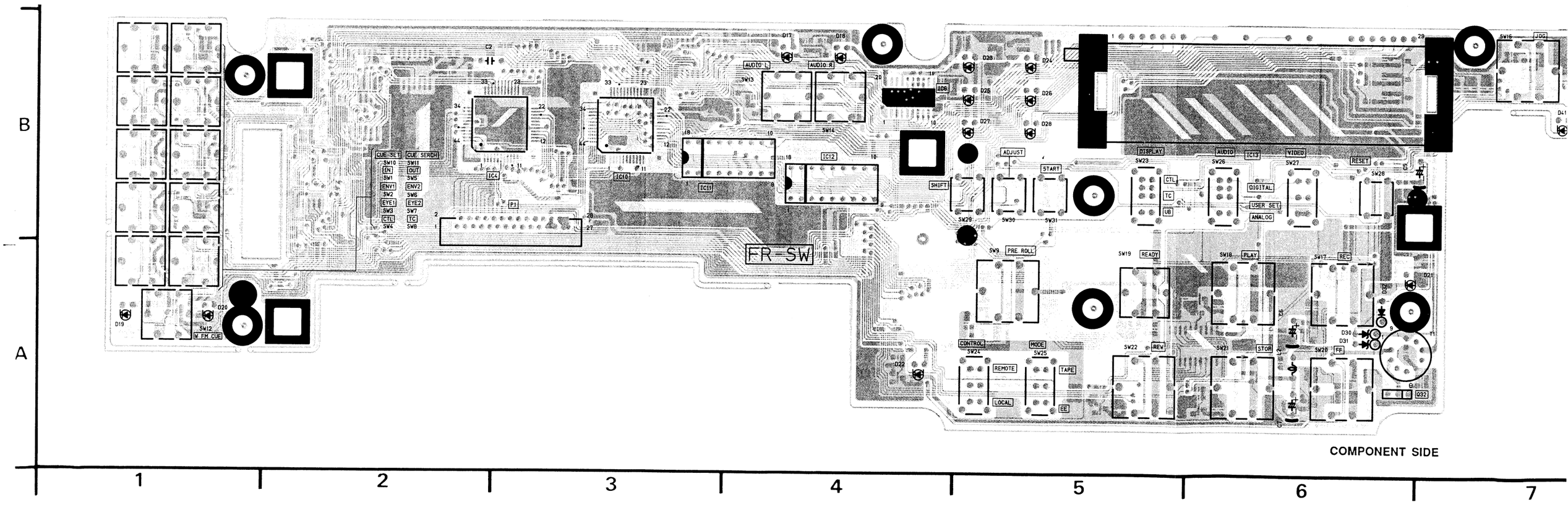

Transistors		Q21	B-12 Ⓕ
Q1	B-15 Ⓕ	Q22	A-15 Ⓕ
Q2	B-15 Ⓕ	Q23	A-15 Ⓕ
Q3	B-15 Ⓕ	Q24	A-9 Ⓕ
Q4	A-15 Ⓕ	Q25	A-12 Ⓕ
Q5	B-15 Ⓕ	Q26	B-11 Ⓕ
Q6	B-15 Ⓕ	Q27	B-11 Ⓕ
Q7	B-15 Ⓕ	Q28	B-11 Ⓕ
Q8	A-15 Ⓕ	Q29	B-11 Ⓕ
Q9	A-11 Ⓕ	Q30	B-11 Ⓕ
Q10	B-15 Ⓕ	Q31	B-11 Ⓕ
Q11	B-15 Ⓕ	Q32	A-6 Ⓒ
Q12	B-8 Ⓕ	Q32	A-9 Ⓕ
Q13	B-9 Ⓕ	Q33	B-14 Ⓕ
Q14	A-10 Ⓕ	Q34	B-12 Ⓕ
Q15	A-10 Ⓕ	Q35	B-12 Ⓕ
Q16	A-11 Ⓕ	Q40	B-9 Ⓕ
Q17	A-10 Ⓕ	Q41	B-9 Ⓕ
Q18	A-10 Ⓕ	Q42	B-9 Ⓕ
Q19	A-11 Ⓕ		
Q20	B-12 Ⓕ		

ADDRESS INFORMATION
Ⓒ... COMPONENT SIDE
Ⓕ... FOIL SIDE

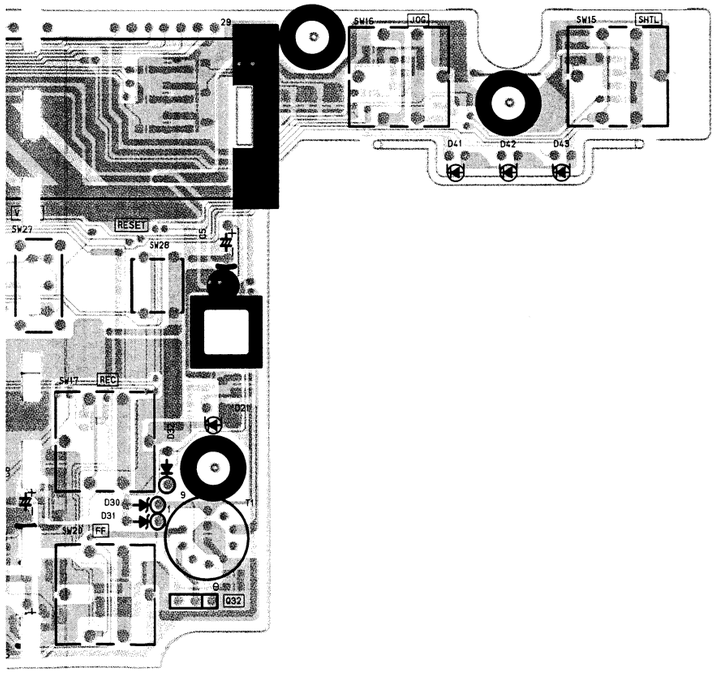

COMPONENT SIDE

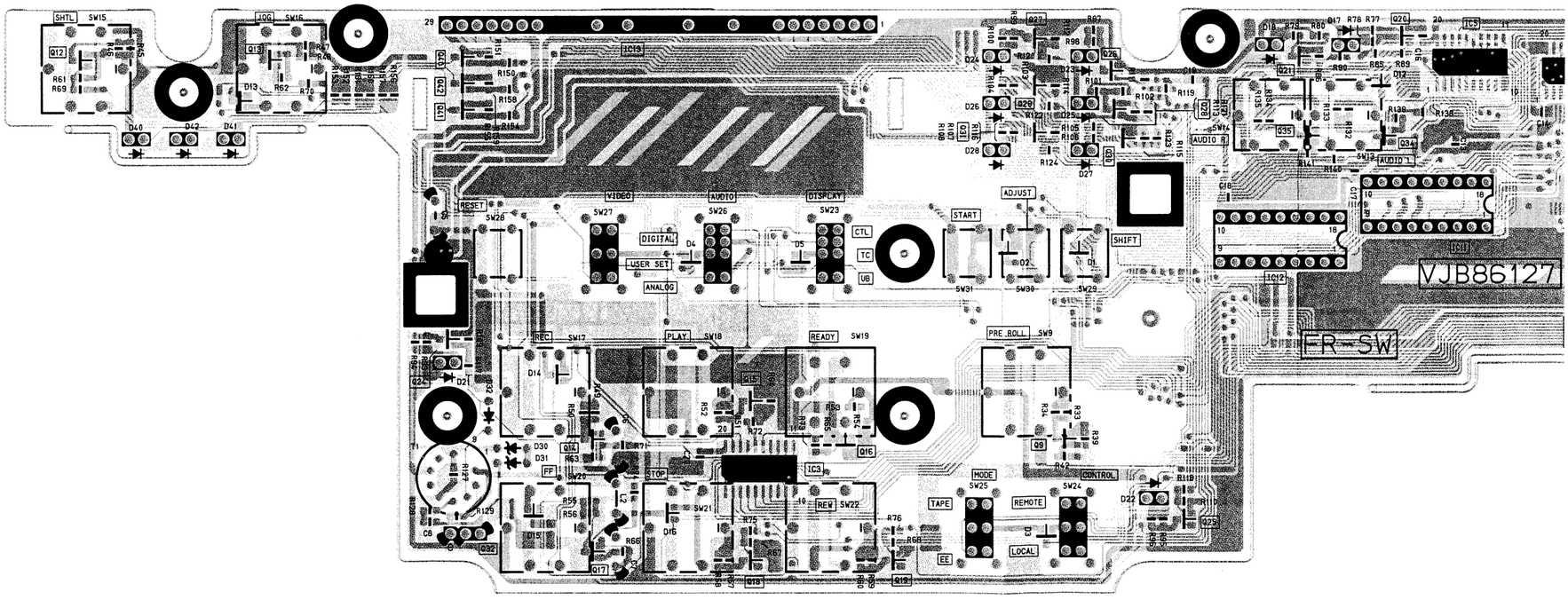

FOIL SIDE

6 7 8 9 10 11 12

FR SW

Transistors			
Q1	B-15 Ⓕ	Q21	B-12 Ⓕ
Q2	B-15 Ⓕ	Q22	A-15 Ⓕ
Q3	B-15 Ⓕ	Q23	A-15 Ⓕ
Q4	A-15 Ⓕ	Q24	A-9 Ⓕ
Q5	B-15 Ⓕ	Q25	A-12 Ⓕ
Q6	B-15 Ⓕ	Q26	B-11 Ⓕ
Q7	B-15 Ⓕ	Q27	B-11 Ⓕ
Q8	A-15 Ⓕ	Q28	B-11 Ⓕ
Q9	A-11 Ⓕ	Q29	B-11 Ⓕ
Q10	B-15 Ⓕ	Q30	B-11 Ⓕ
Q11	B-15 Ⓕ	Q31	B-11 Ⓕ
Q12	B-8 Ⓕ	Q32	A-6 Ⓒ
Q13	B-9 Ⓕ	Q32	A-9 Ⓕ
Q14	A-10 Ⓕ	Q33	B-14 Ⓕ
Q15	A-10 Ⓕ	Q34	B-12 Ⓕ
Q16	A-11 Ⓕ	Q35	B-12 Ⓕ
Q17	A-10 Ⓕ	Q40	B-9 Ⓕ
Q18	A-10 Ⓕ	Q41	B-9 Ⓕ
Q19	A-11 Ⓕ	Q42	B-9 Ⓕ
Q20	B-12 Ⓕ		

Integrated Circuits		Switches							
IC1	B-14 Ⓕ	SW1	B-2 Ⓒ	SW11	B-2 Ⓒ	SW21	A-10 Ⓕ		
IC2	B-13 Ⓕ	SW1	B-14 Ⓕ	SW11	B-14 Ⓕ	SW22	A-5 Ⓒ		
IC3	A-10 Ⓕ	SW2	B-2 Ⓒ	SW12	A-1 Ⓒ	SW22	A-11 Ⓕ		
IC4	B-3 Ⓒ	SW2	B-14 Ⓕ	SW12	A-15 Ⓕ	SW23	B-5 Ⓒ		
IC5	B-12 Ⓕ	SW3	B-2 Ⓒ	SW13	B-4 Ⓒ	SW23	B-11 Ⓕ		
IC6	B-4 Ⓒ	SW3	B-14 Ⓕ	SW13	B-12 Ⓕ	SW24	A-5 Ⓒ		
IC7	B-14 Ⓕ	SW4	B-2 Ⓒ	SW14	B-4 Ⓒ	SW24	A-11 Ⓕ		
IC8	B-14 Ⓕ	SW4	B-14 Ⓕ	SW14	B-12 Ⓕ	SW25	A-5 Ⓒ		
IC9	B-14 Ⓕ	SW5	B-2 Ⓒ	SW15	B-7 Ⓒ	SW25	A-11 Ⓕ		
IC10	B-3 Ⓒ	SW5	B-14 Ⓕ	SW15	B-8 Ⓕ	SW26	B-6 Ⓒ		
IC11	B-3 Ⓒ	SW6	B-2 Ⓒ	SW16	B-7 Ⓒ	SW26	B-10 Ⓕ		
IC11	B-12 Ⓕ	SW6	B-14 Ⓕ	SW16	B-9 Ⓕ	SW27	B-6 Ⓒ		
IC12	B-4 Ⓒ	SW7	B-2 Ⓒ	SW17	A-6 Ⓒ	SW27	B-10 Ⓕ		
IC12	B-12 Ⓕ	SW7	B-14 Ⓕ	SW17	A-10 Ⓕ	SW28	B-6 Ⓒ		
IC13	B-10 Ⓕ	SW8	B-2 Ⓒ	SW18	A-6 Ⓒ	SW28	B-9 Ⓕ		
		SW8	B-14 Ⓕ	SW18	A-10 Ⓕ	SW29	B-5 Ⓒ		
Connector		SW9	A-5 Ⓒ	SW19	A-5 Ⓒ	SW29	B-11 Ⓕ		
P1	B-3 Ⓒ	SW9	A-11 Ⓕ	SW19	A-11 Ⓕ	SW30	B-5 Ⓒ		
P1	B-13 Ⓕ	SW10	B-2 Ⓒ	SW20	A-6 Ⓒ	SW30	B-11 Ⓕ		
		SW10	B-14 Ⓕ	SW20	A-10 Ⓕ	SW31	B-5 Ⓒ		
				SW21	A-6 Ⓒ	SW31	B-11 Ⓕ		

ADDRESS INFORMATION
Ⓒ... COMPONENT SIDE
Ⓕ... FOIL SIDE

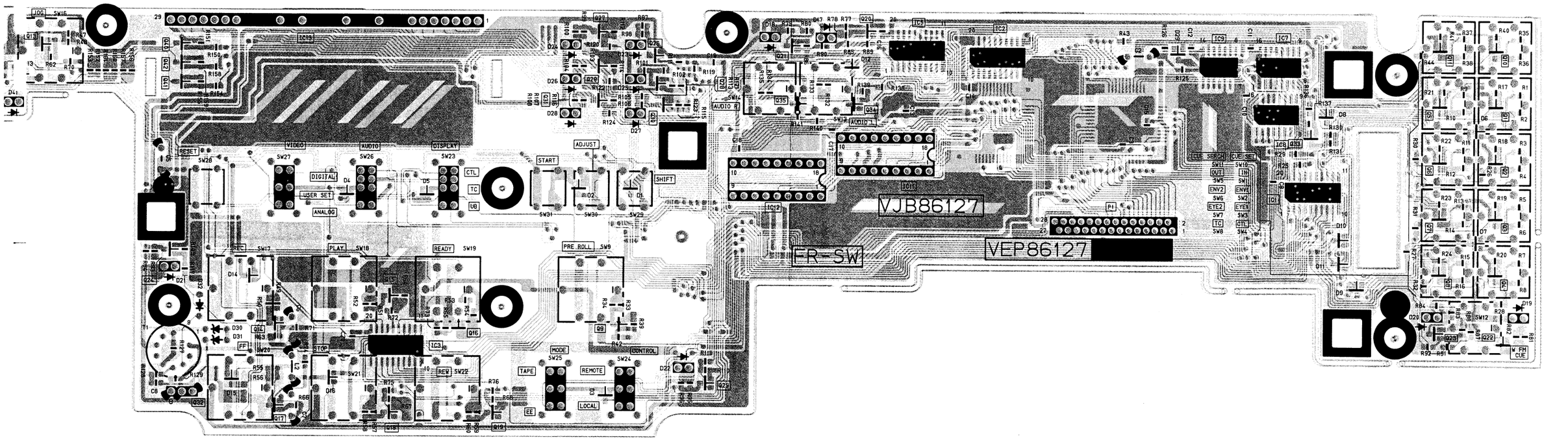

FOIL SIDE

FR CPU P.C. BOARD (VEP86126A) FR CPU SUB P.C. BOARD (VEP86129A)

FR CPU P.C. BOARD (VEP86126A)

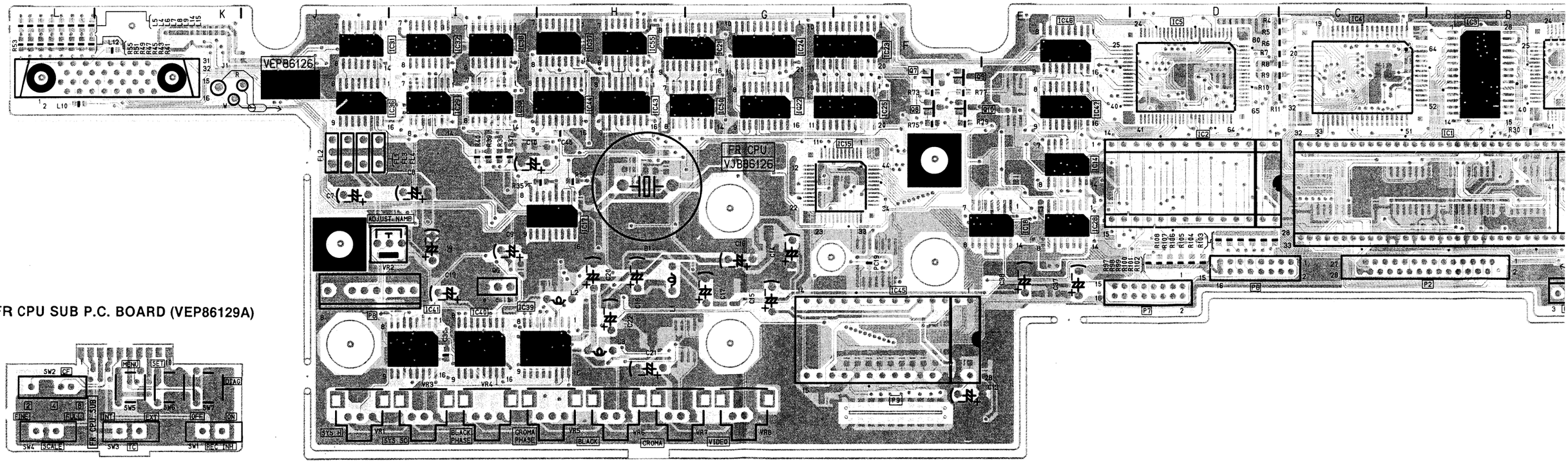

FR CPU SUB P.C. BOARD (VEP86129A)

Transistors			Integrated Circuits		
Q1	H-2	Ⓕ	IC1	B-2	Ⓒ
Q2	I-2	Ⓕ	IC1	B-2	Ⓕ
Q3	I-2	Ⓕ	IC2	D-2	Ⓒ
Q4	I-3	Ⓕ	IC2	D-2	Ⓕ
Q5	I-2	Ⓕ	IC3	B-3	Ⓒ
Q6	I-1	Ⓒ	IC4	C-3	Ⓒ
Q6	I-1	Ⓕ	IC5	D-3	Ⓒ
Q7	F-3	Ⓒ	IC6	A-2	Ⓒ
Q8	F-2	Ⓒ	IC7	B-3	Ⓕ
Q9	F-3	Ⓒ	IC8	B-3	Ⓕ
Q10	F-2	Ⓒ	IC9	B-2	Ⓕ
			IC10	A-2	Ⓕ
			IC11	B-2	Ⓕ
			IC12	C-2	Ⓕ
			IC13	C-2	Ⓕ
			IC14	E-2	Ⓒ
			IC15	F-2	Ⓒ
			IC16	K-3	Ⓕ
			IC17	H-2	Ⓒ
			IC18	E-2	Ⓒ
			IC19	F-2	Ⓕ
			IC20	E-3	Ⓕ
			IC21	G-3	Ⓒ
			IC22	G-2	Ⓒ
			IC23	F-3	Ⓒ
			IC24	G-3	Ⓒ
			IC25	F-2	Ⓒ
			IC26	C-3	Ⓕ
			IC27	C-1	Ⓕ

ADDRESS INFORMATION
Ⓒ... COMPONENT SIDE
Ⓕ... FOIL SIDE

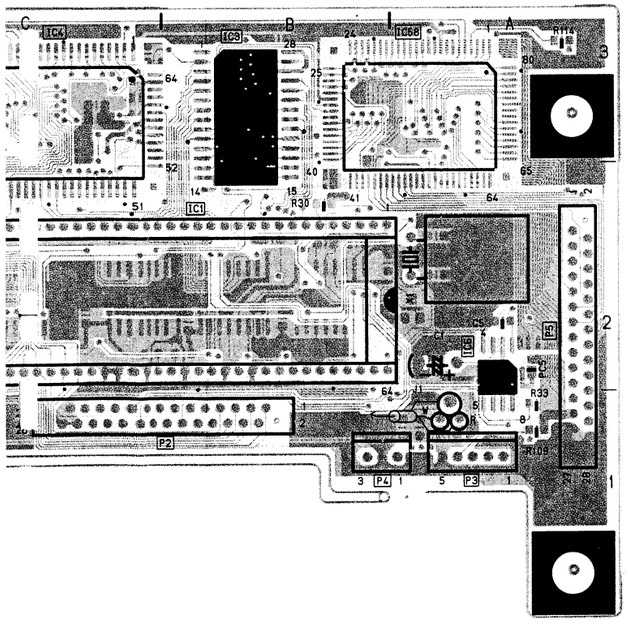

COMPONENT SIDE

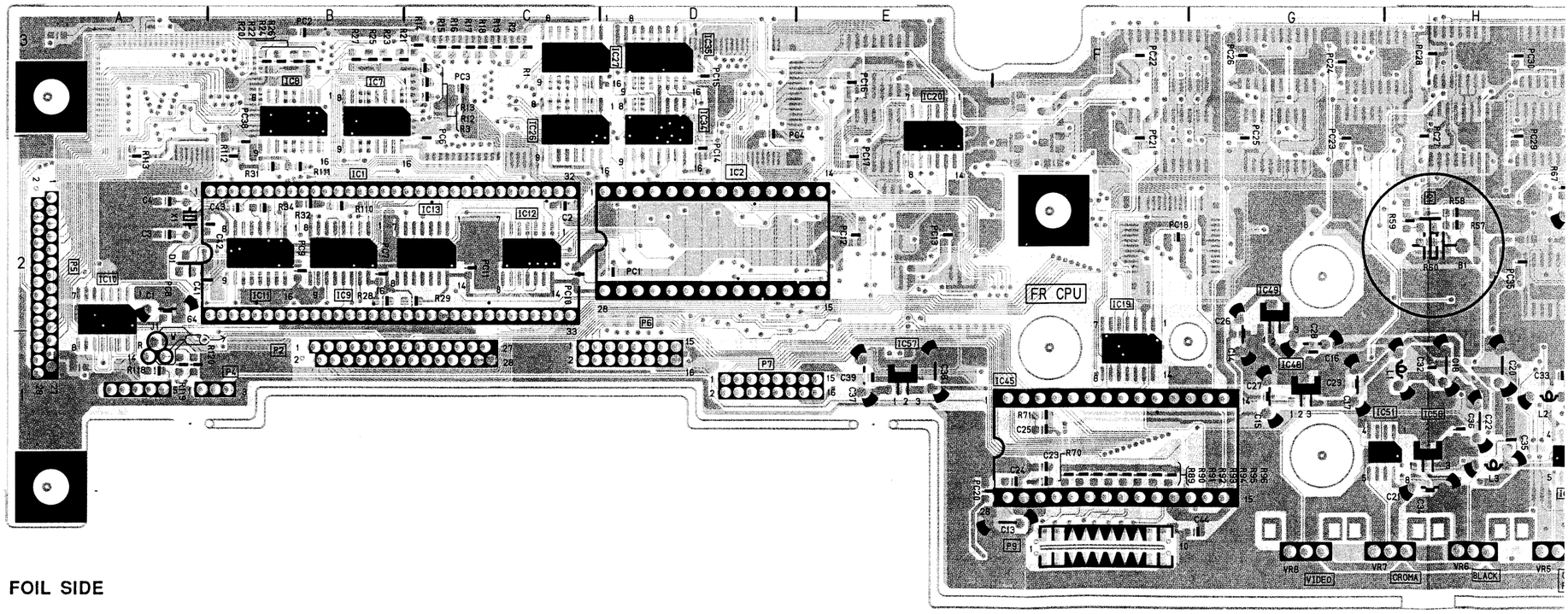

FOIL SIDE

FR CPU/FR CPU SUB

Transistors

Q1	H-2 Ⓕ
Q2	I-2 Ⓕ
Q3	I-2 Ⓕ
Q4	I-3 Ⓕ
Q5	I-2 Ⓕ
Q6	I-1 Ⓒ
Q6	I-1 Ⓕ
Q7	F-3 Ⓒ
Q8	F-2 Ⓒ
Q9	F-3 Ⓒ
Q10	F-2 Ⓒ

Integrated Circuits

IC1	B-2 Ⓒ
IC1	B-2 Ⓕ
IC2	D-2 Ⓒ
IC2	D-2 Ⓕ
IC3	B-3 Ⓒ
IC4	C-3 Ⓒ
IC5	D-3 Ⓒ
IC6	A-2 Ⓒ
IC7	B-3 Ⓕ
IC8	B-3 Ⓕ
IC9	B-2 Ⓕ
IC10	A-2 Ⓕ
IC11	B-2 Ⓕ
IC12	C-2 Ⓕ
IC13	C-2 Ⓕ
IC14	E-2 Ⓒ
IC15	F-2 Ⓒ
IC16	K-3 Ⓕ
IC17	H-2 Ⓒ
IC18	E-2 Ⓒ
IC19	F-2 Ⓕ
IC20	E-3 Ⓕ
IC21	G-3 Ⓒ
IC22	G-2 Ⓒ
IC23	F-3 Ⓒ
IC24	G-3 Ⓒ
IC25	F-2 Ⓒ
IC26	C-3 Ⓕ
IC27	C-1 Ⓕ
IC28	E-2 Ⓒ
IC29	I-2 Ⓒ
IC30	I-2 Ⓒ
IC31	J-3 Ⓒ
IC32	I-3 Ⓒ
IC34	D-3 Ⓕ
IC35	D-3 Ⓕ
IC36	J-2 Ⓒ
IC37	H-3 Ⓒ
IC38	I-3 Ⓒ
IC39	H-1 Ⓒ
IC40	I-1 Ⓒ
IC41	I-1 Ⓒ
IC43	H-2 Ⓒ
IC44	H-2 Ⓒ
IC45	F-1 Ⓒ
IC45	F-1 Ⓕ
IC46	E-3 Ⓒ
IC47	E-2 Ⓒ
IC48	G-1 Ⓕ
IC49	G-2 Ⓕ
IC50	G-2 Ⓒ
IC51	H-1 Ⓕ
IC52	H-1 Ⓕ
IC53	I-1 Ⓕ
IC54	I-1 Ⓕ
IC55	H-3 Ⓒ
IC56	H-1 Ⓕ
IC57	E-1 Ⓕ
IC58	A-3 Ⓒ
IC59	I-3 Ⓕ

Adjusters

VR1	J-1 Ⓒ
VR1	J-1 Ⓕ
VR2	J-1 Ⓒ
VR3	I-1 Ⓒ
VR3	I-1 Ⓕ
VR4	I-1 Ⓒ
VR4	I-1 Ⓕ
VR5	H-1 Ⓒ
VR5	H-1 Ⓕ
VR6	H-1 Ⓒ
VR6	H-1 Ⓕ
VR7	G-1 Ⓒ
VR7	G-1 Ⓕ
VR8	G-1 Ⓒ
VR8	G-1 Ⓕ

Connector

P1	
P1	
P2	B-1 Ⓒ
P2	B-1 Ⓕ
P3	A-1 Ⓒ
P3	A-1 Ⓕ
P4	B-1 Ⓒ
P4	B-1 Ⓕ
P5	A-2 Ⓒ
P5	A-2 Ⓕ
P6	D-1 Ⓒ
P6	D-1 Ⓕ
P7	D-1 Ⓒ
P7	D-1 Ⓕ
P8	J-1 Ⓒ
P8	J-1 Ⓕ
P9	F-1 Ⓒ
P9	F-1 Ⓕ

Switches

SW1	K-1 Ⓒ
SW1	K-1 Ⓕ
SW2	L-1 Ⓒ
SW2	L-1 Ⓕ
SW3	K-1 Ⓒ
SW3	K-1 Ⓕ
SW4	L-1 Ⓒ
SW4	L-1 Ⓕ
SW5	K-1 Ⓒ
SW5	K-1 Ⓕ
SW6	K-1 Ⓒ
SW6	K-1 Ⓕ
SW7	K-1 Ⓒ
SW7	K-1 Ⓕ

ADDRESS INFORMATION
Ⓒ... COMPONENT SIDE
Ⓕ... FOIL SIDE

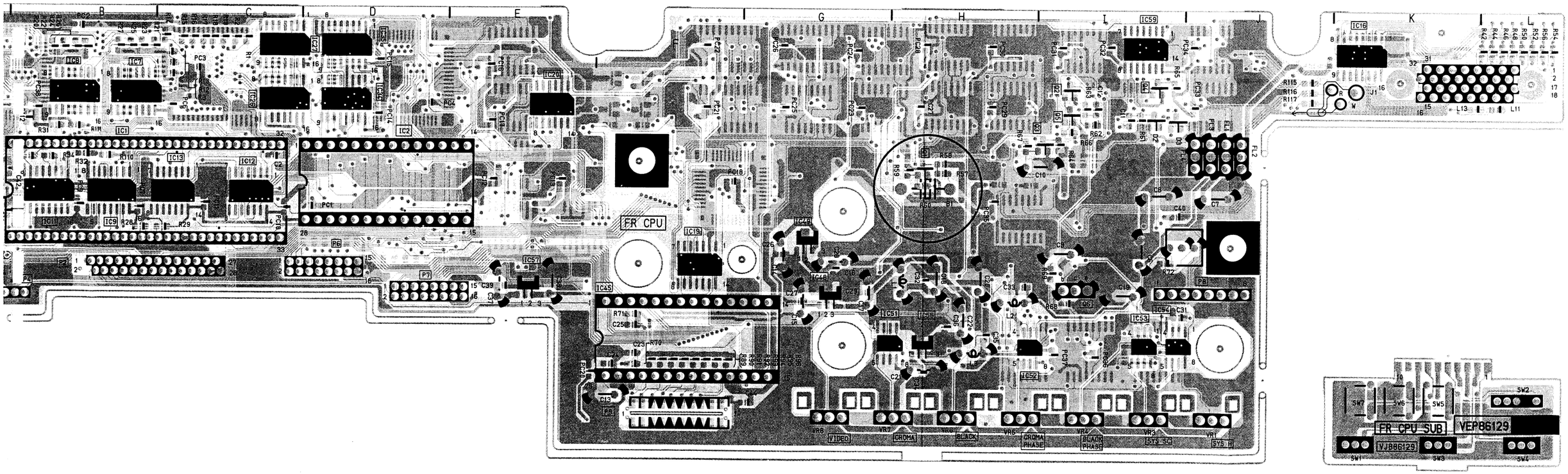

REVERSE SIDE
FR VR/AUDIO JACK

AUDIO JACK P.C. BOARD (VEP84157A)

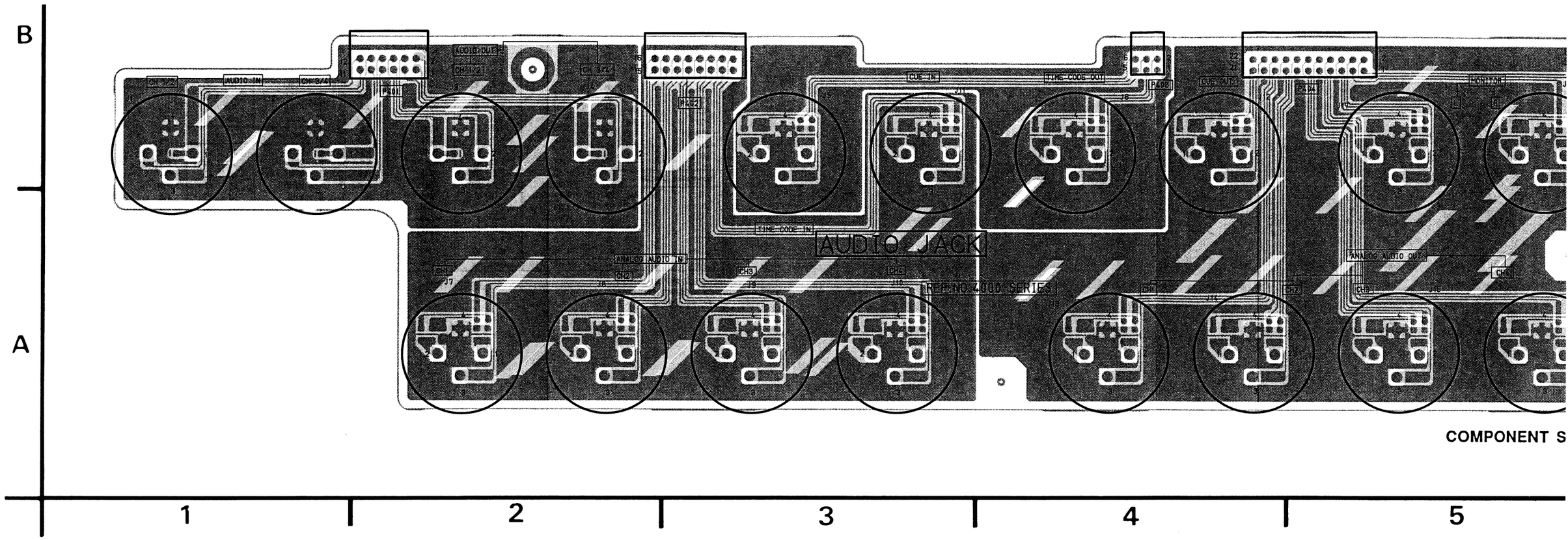

COMPONENT S

FR VR P.C. BOARD (VEP86132A)

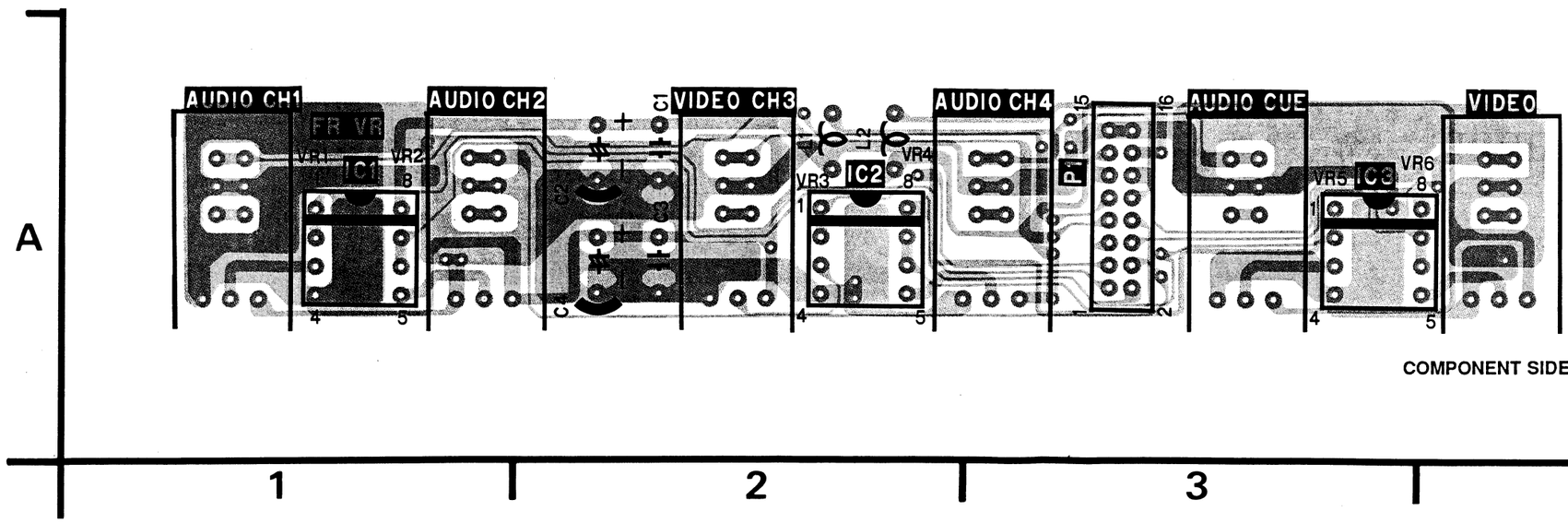

COMPONENT SIDE

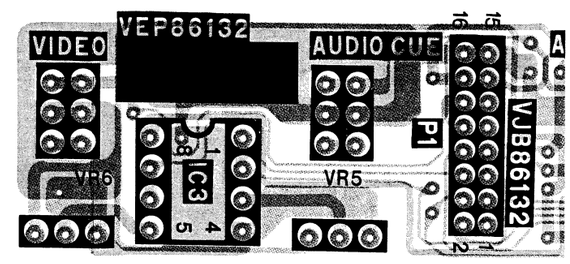

FOIL SIDE

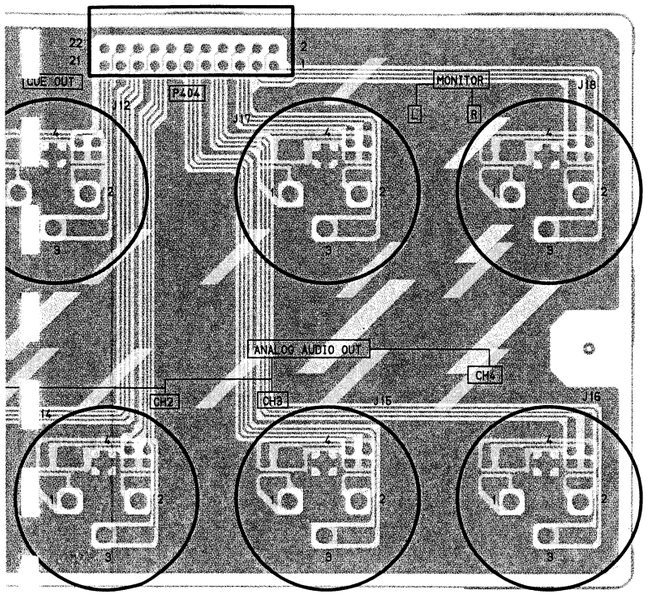

COMPONENT SIDE

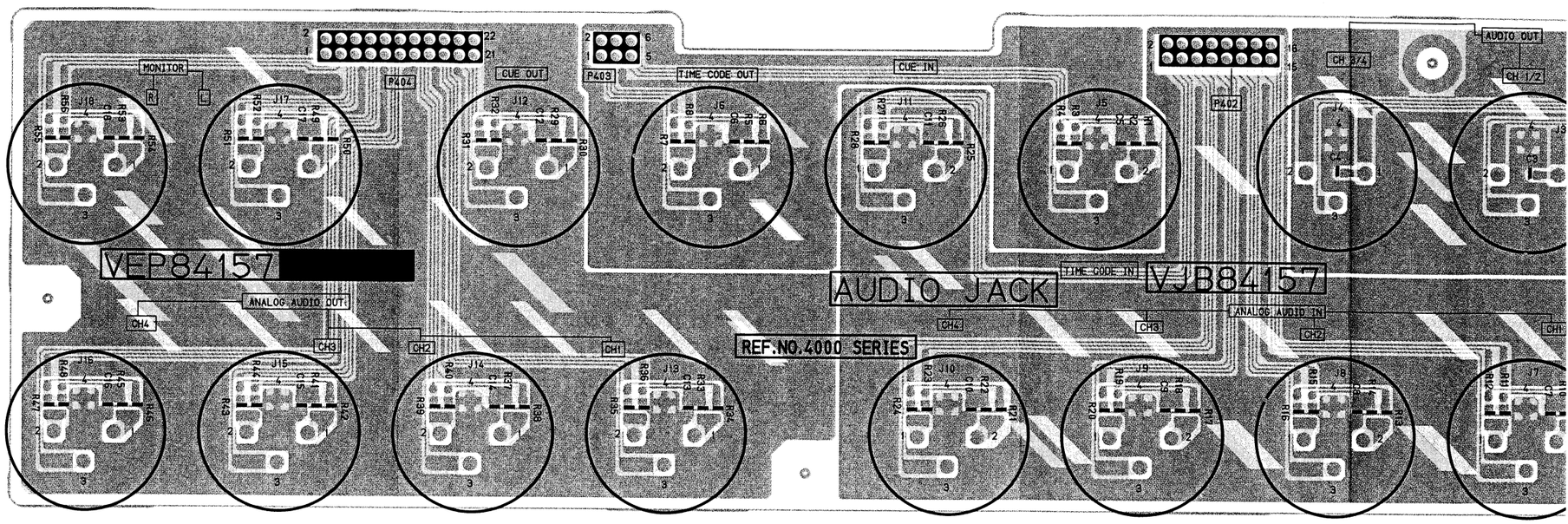

FOIL SIDE

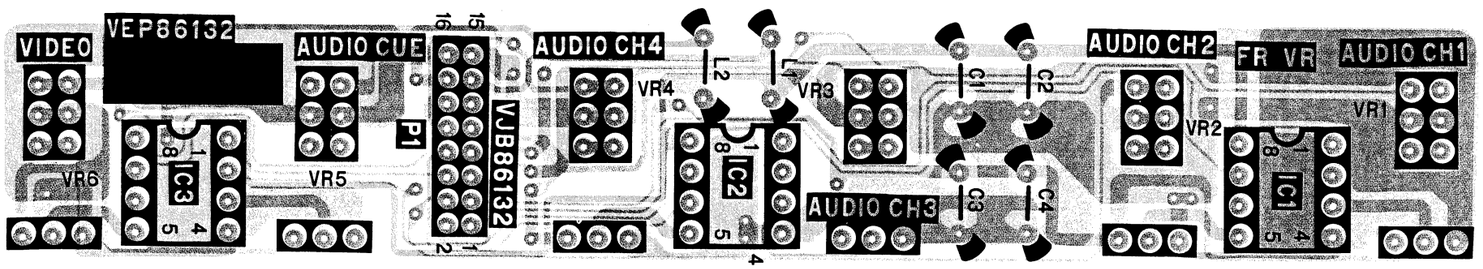

I)IL SIDE

FR VR	
Integrated Circuits	
IC1	A-1 ©
IC1	A-7 Ⓕ
IC2	A-2 ©
IC2	A-6 Ⓕ
IC3	A-3 ©
IC3	A-5 Ⓕ
Connectors	
P1	A-3 ©
P1	A-5 Ⓕ
Adjustments	
VR1	A-1 ©
VR1	A-7 Ⓕ
VR2	A-1 ©
VR2	A-7 Ⓕ
VR3	A-2 ©
VR3	A-6 Ⓕ
VR4	A-3 ©
VR4	A-5 Ⓕ
VR5	A-3 ©
VR5	A-5 Ⓕ
VR6	A-3 ©
VR6	A-4 Ⓕ

ADDRESS INFORMATION
©... COMPONENT SIDE
Ⓕ... FOIL SIDE

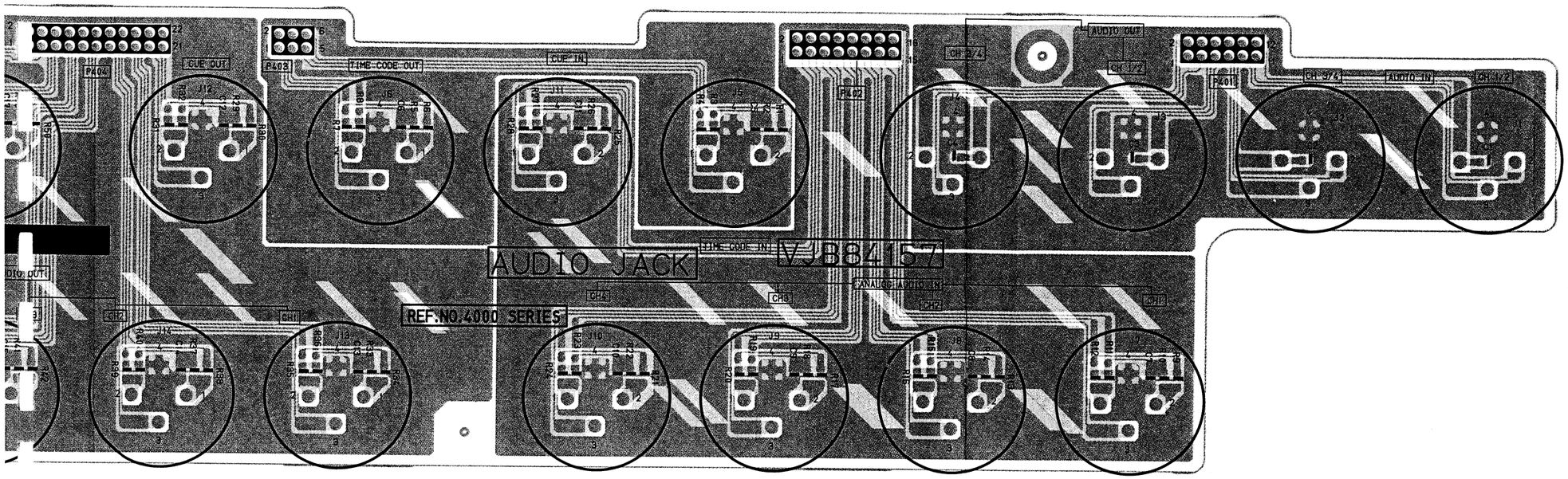

AUDIO JACK	
Connectors	
P401	B-2 Ⓒ
P401	B-10 Ⓕ
P402	B-3 Ⓒ
P402	B-9 Ⓕ
P403	B-4 Ⓒ
P403	B-7 Ⓕ
P404	B-5 Ⓒ
P404	B-7 Ⓕ

ADDRESS INFORMATION
Ⓒ... COMPONENT SIDE
Ⓕ... FOIL SIDE

7 8 9 10

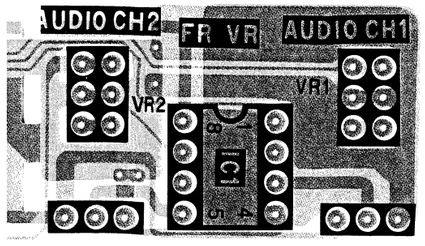

7

FR VR	
Integrated Circuits	
IC1	A-1 Ⓒ
IC1	A-7 Ⓕ
IC2	A-2 Ⓒ
IC2	A-6 Ⓕ
IC3	A-3 Ⓒ
IC3	A-5 Ⓕ
Connectors	
P1	A-3 Ⓒ
P1	A-5 Ⓕ
Adjustments	
VR1	A-1 Ⓒ
VR1	A-7 Ⓕ
VR2	A-1 Ⓒ
VR2	A-7 Ⓕ
VR3	A-2 Ⓒ
VR3	A-6 Ⓕ
VR4	A-3 Ⓒ
VR4	A-5 Ⓕ
VR5	A-3 Ⓒ
VR5	A-5 Ⓕ
VR6	A-3 Ⓒ
VR6	A-4 Ⓕ

ADDRESS INFORMATION
Ⓒ... COMPONENT SIDE
Ⓕ... FOIL SIDE

VIDEO JACK P.C. BOARD (VEP88099A)

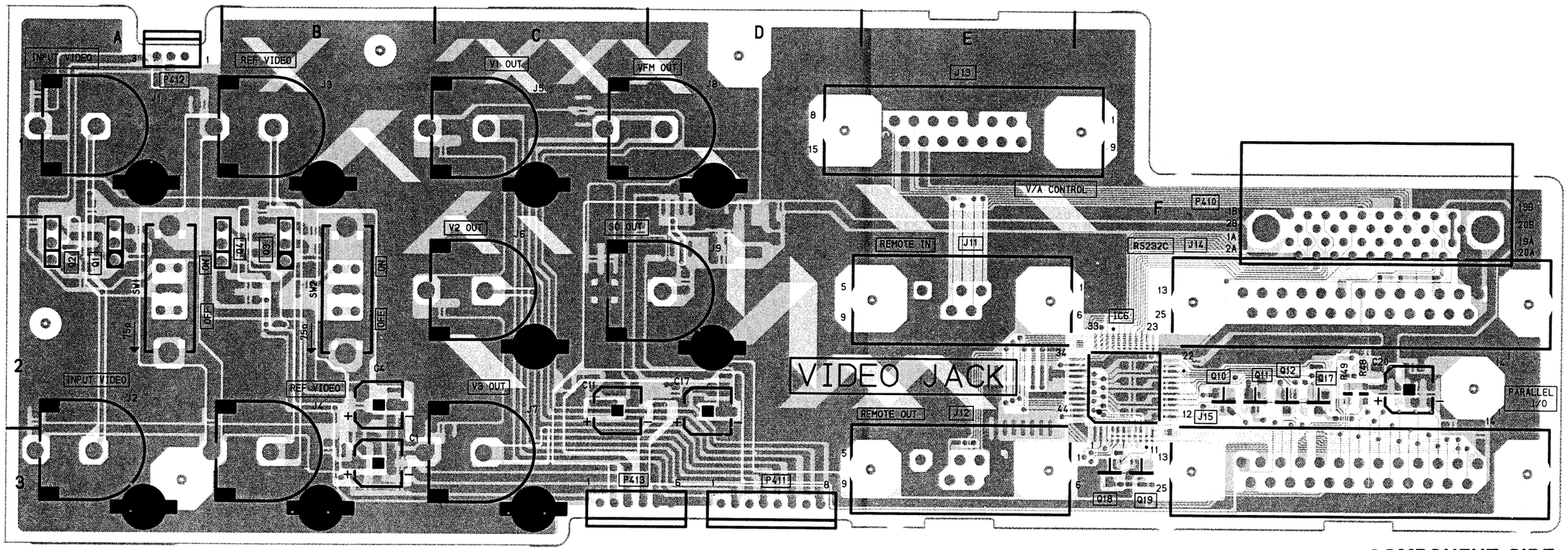

COMPONENT SIDE

FOIL SIDE

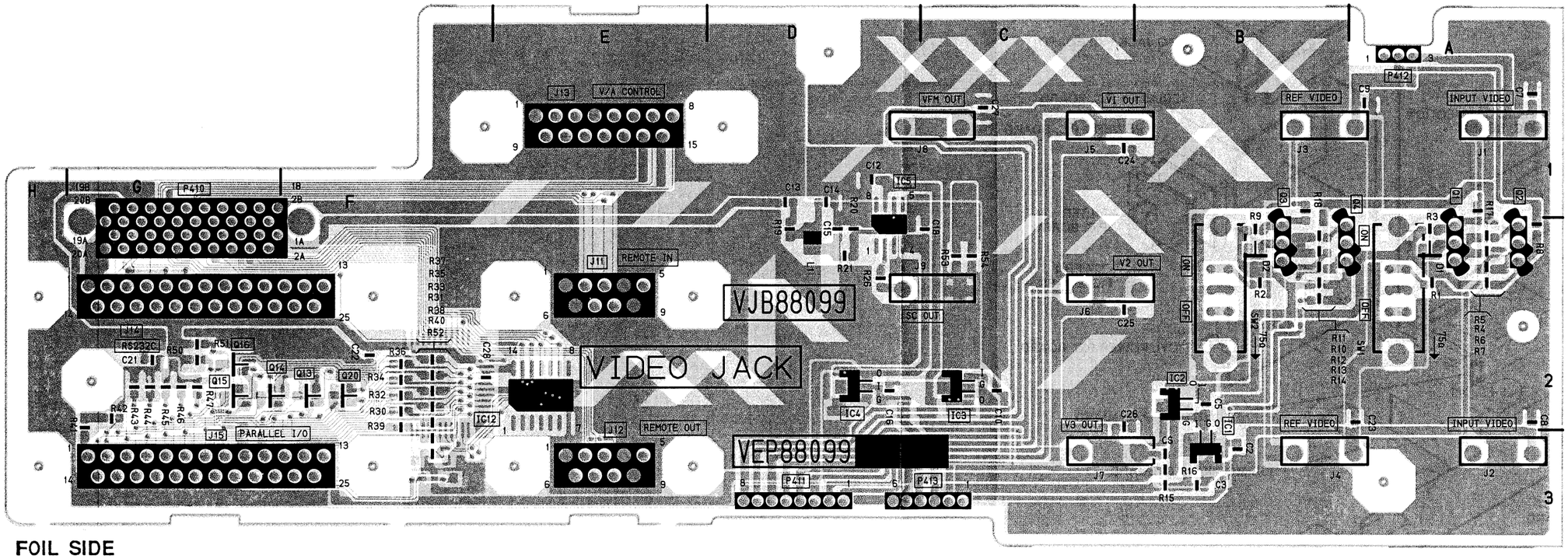

FOIL SIDE

VIDEO JACK		
Transistors		
Q1	A-2	©
Q1	A-2	Ⓕ
Q2	A-2	©
Q2	A-2	Ⓕ
Q3	B-2	©
Q3	B-2	Ⓕ
Q4	B-2	©
Q4	B-2	Ⓕ
Q10	F-2	©
Q11	F-2	©
Q12	F-2	©
Q13	F-2	Ⓕ
Q14	G-2	Ⓕ
Q15	G-2	Ⓕ
Q16	G-2	Ⓕ
Q17	F-2	©
Q18	F-3	©
Q19	F-3	©
Q20	F-2	Ⓕ
Integrated Circuits		
IC1	B-3	Ⓕ
IC2	B-2	Ⓕ
IC3	C-2	Ⓕ
IC4	D-2	Ⓕ
IC5	D-1	Ⓕ
IC6	F-2	©
IC12	F-2	Ⓕ
Connectors		
P410	F-1	©
P410	G-1	Ⓕ
P411	D-3	©
P411	D-3	Ⓕ
P412	A-1	©
P412	A-1	Ⓕ
P413	C-3	©
P413	C-3	Ⓕ
Switches		
SW1	A-2	©
SW1	A-2	Ⓕ
SW2	B-2	©
SW2	B-2	Ⓕ

ADDRESS INFORMATION
© ... COMPONENT SIDE
Ⓕ ... FOIL SIDE

CIRCUIT BOARD LOCATION

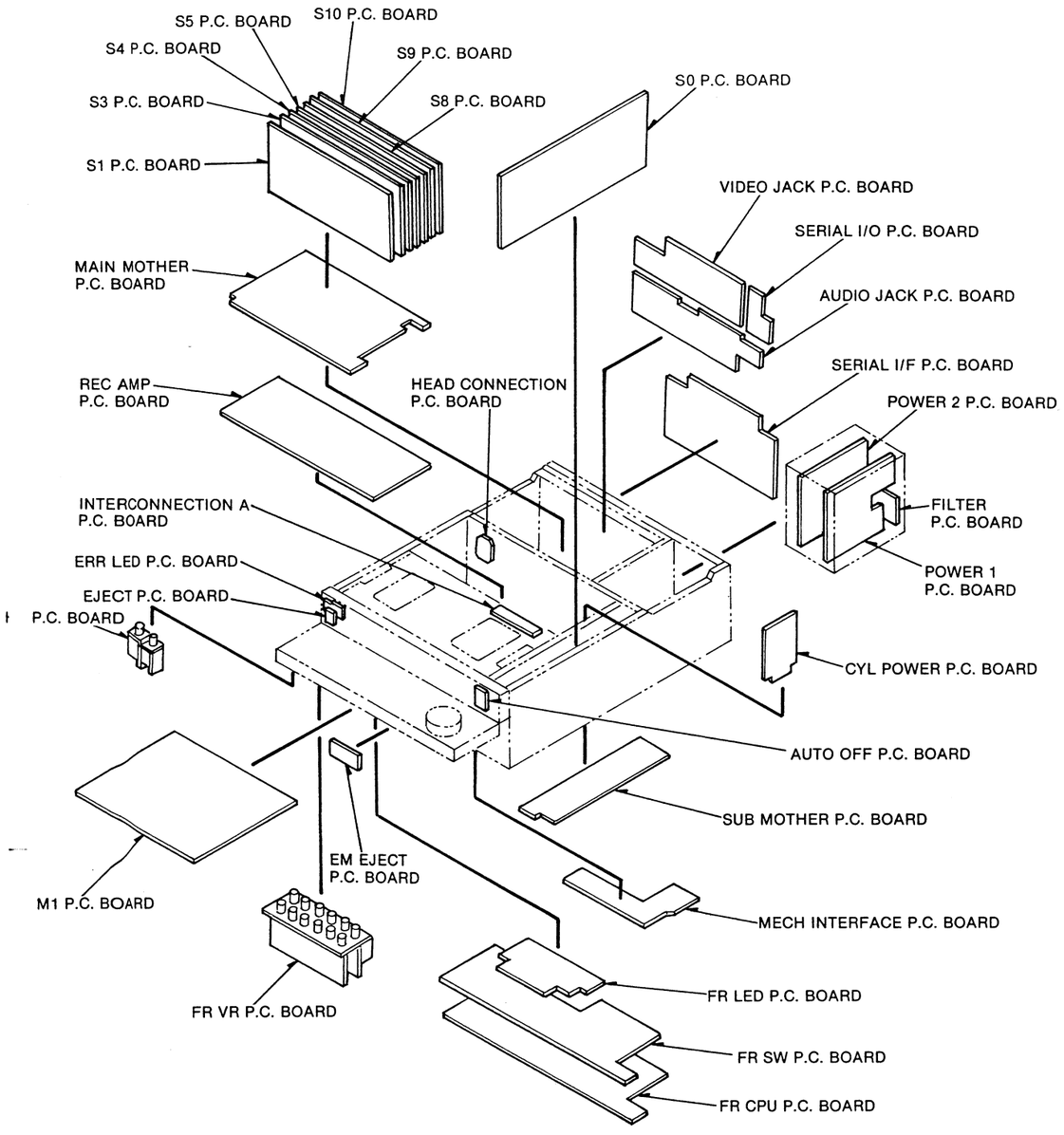

REVERSE SIDE

VIDEO JACK

Service Manual

Exploded Views
Mechanical Parts List
Electrical Parts List

Note:
1. *Be sure to make your orders of replacement parts according to this list.
2. Unless otherwise specified, all resistors are in OHMS, K=1,000 OHMS, all capacitors are in MICROFARADS (μF), P=$\mu\mu$F.
3. The P.C.Board units marked with "■" shown below the main assembled parts.
4. The parts marked with Ⓔ on the exploded view show the electric parts.
5. IMPORTANT SAFETY NOTICE
   Components identified with the mark < ! > have the special characteristics for safety. When replacing any of these components, use only the same type.

<<Abbreviations for part>>

<NAME>		<DESCRIPTIONS>
C. CAPACITOR		: CERAMIC CAPACITOR
C. CAPACITOR	CH	: CERAMIC CHIP CAPACITOR
E. CAPACITOR		: ELECTROLYTIC CAPACITOR
G. CAPACITOR		: GLASS CAPACITOR
M. CAPACITOR		: MICA CAPACITOR
P. CAPACITOR		: PLASTIC FILM CAPACITOR
S. CAPACITOR		: SEMI-CONDUCTOR CAPACITOR
T. CAPACITOR		: TANTALUM CAPACITOR
TRIMMER		: TRIMMER
C. RESISTOR		: CARBON RESISTOR
F. RESISTOR		: FUSE RESISTOR
M. RESISTOR		: METAL OXSIDE RESISTOR
M. RESISTOR	CH	: METAL OXSIDE CHIP RESISTOR
S. RESISTOR		: SOLID RESISTOR
V. RESISTOR		: VARIABLE RESISTOR
W. RESISTOR		: WIRE WOUND RESISTOR
COMBI. TR-R		: TRANSISTOR-RESISTOR COMBINATION PARTS
COMBI. R-R		: RESISTOR-RESISTOR COMBINATION PARTS
COMBI. C-R		: CAPACITOR-RESISTOR COMBINATION PARTS
COMBI. C-R-R		: CAPACITOR-RESISTOR-COIL COMBINATION PARTS
P.C. BOARD		: PRINTED CIRCUIT BOARD
W/COMPONENT		: WITH COMPONENT

Panasonic
Broadcast Systems

Exploded Views & Parts List

PAL

Panasonic
Broadcast Systems

CONTENTS

PAL

ELECTRICAL REPLACEMENT PARTS LIST 5-78
M1 AV DSP P.C.BOARD (VEP88095B) 5-79
M SUB 1 AV REC P.C.BOARD (VEP88096B) 5-79
M SUB 2 V PROCESS P.C.BOARD (VEP88097A) 5-79
S0 DRIVE P.C.BOARD (VEP82092A) 5-86
S1 EQ1 P.C.BOARD (VEP85036B) 5-89
S3 TC/CUE P.C.BOARD (VEP86123B) 5-95
S3 SUB TC/CUE SUB P.C.BOARD (VEP86124A) 5-95
S4 SERVO/AT P.C.BOARD (VEP82093B) 5-102
S5 SYSCON P.C.BOARD (VEP86125B) 5-105
S8 AUDIO D/A P.C.BOARD (VEP84155A) 5-107
S9 AUDIO A/D P.C.BOARD (VEP84156A) 5-112
S10 VIDEO A/D, D/A P.C.BOARD (VEP88093B) 5-116
MAIN MOTHER P.C.BOARD (VEP80786A) 5-121
SUB MOTHER P.C.BOARD (VEP80787A) 5-121
REC AMP P.C.BOARD (VEP85037A) 5-121
CYL POWER P.C.BOARD (VEP85040A) 5-123
MECA IF P.C.BOARD (VEP80788A) 5-124
SERVO CNTL P.C.BOARD (VEP82097A) 5-124
HEAD CONECTION P.C.BOARD (VEP80785A) 5-125
EM EJECT P.C.BOARD (VEP82098A) 5-125
SERIAL IF P.C.BOARD (VEP88098A) 5-125
AUDIO JACK P.C.BOARD (VEP84157A) 5-126
VIDEO JACK P.C.BOARD (VEP88099A) 5-127
SERIAL I/O P.C.BOARD (VEP88106A) 5-127
POWER 1 P.C.BOARD (VEP81067A) 5-128
POWER 1 SUB P.C.BOARD (VEP81070A) 5-128
POWER 2 SUB P.C.BOARD (VEP81072A) 5-128
POWER 2 P.C.BOARD (VEP81068A) 5-129
POWER 3 P.C.BOARD (VEP81069A) 5-130
AUTO OFF LED P.C.BOARD (VEP80792A) 5-130
EJECT P.C.BOARD (VEP80790A) 5-131
ERR LED P.C.BOARD (VEP80804A) 5-131
HP JACK P.C.BOARD (VEP86131A) 5-131
HP VR P.C.BOARD (VEP86130A) 5-131
FR VR P.C.BOARD (VEP86132A) 5-131
FR CPU P.C.BOARD (VEP86126B) 5-131
CPU SUB P.C.BOARD (VEP86129A) 5-131
FR SW P.C.BOARD (VEP86127A) 5-133
FR LED P.C.BOARD (VEP86128A) 5-134
S EXTENSION P.C.BOARD (VFK0882) 5-134
M EXTENSION P.C.BOARD (VFK0883) 5-134

MECHANICAL REPLACEMENT PARTS LIST
MECHANICAL COMPONENT ASSEMBLY (1) 5-135
MECHANICAL COMPONENT ASSEMBLY (2) 5-137
MECHANICAL COMPONENT ASSEMBLY (3) 5-139
MECHANICAL COMPONENT ASSEMBLY (4) 5-141
CASING PARTS ASSEMBLY 5-143
FRONT PANEL ASSEMBLY 5-145
REAR JACK PANEL ASSEMBLY 5-147
CASSETTE COMPPARTMENT ASSEMBLY 5-149
CHASSIS FRAME ASSEMBLY 5-151
PACKING PARTS ASSEMBLY 5-153

ELECTRICAL REPLACEMENT PARTS LIST

Ref.No.		Part No.	Part Name & Description	Pcs	Remarks
M1		VEP88095B	P.C.BOARD W/COMPONENT	1	
			AV DSP		
M SUB1		VEP88096B	P.C.BOARD W/COMPONENT	1	ON VEP88095B
			AV REC		
M SUB2		VEP88097A	P.C.BOARD W/COMPONENT	1	ON VEP88095B
			V PROCESS		
SO		VEP82092A	P.C.BOARD W/COMPONENT	1	
			DRIVE		
S1		VEP85036B	P.C.BOARD W/COMPONENT	1	
			EQ1		
S3		VEP86123B	P.C.BOARD W/COMPONENT	1	
			TC/CUE		
S3 SUB		VEP86124A	P.C.BOARD W/COMPONENT	1	ON VEP86123B
			TC/CUE SUB		
S4		VEP82093B	P.C.BOARD W/COMPONENT	1	
			SERVO/AT		
S5		VEP86125B	P.C.BOARD W/COMPONENT	1	
			SYSCON		
S8		VEP84155A	P.C.BOARD W/COMPONENT	1	
			AUDIO D/A		
S9		VEP84156A	P.C.BOARD W/COMPONENT	1	
			AUDIO A/D		
S10		VEP88093B	P.C.BOARD W/COMPONENT	1	
			VIDEO A/D,D/A		
		VEP80786A	P.C.BOARD W/COMPONENT	1	
			MAIN MOTHER		
		VEP80787A	P.C.BOARD W/COMPONENT	1	ON VEP80786A
			SUB MOTHER		
		VEP85037A	P.C.BOARD W/COMPONENT	1	
			REC AMP		
		VEP85040A	P.C.BOARD W/COMPONENT	1	
			CYL POWER		
		VEP80788A	P.C.BOARD W/COMPONENT	1	
			MECA IF		
		VEP82097A	P.C.BOARD W/COMPONENT	1	
			SERVO CNTL		
		VEP80785A	P.C.BOARD W/COMPONENT	1	
			HEAD CONECTION		
		VEP82098A	P.C.BOARD W/COMPONENT	1	
			EM EJECT		
		VEP88098A	P.C.BOARD W/COMPONENT	1	
			SERIAL IF		
		VEP84157A	P.C.BOARD W/COMPONENT	1	
			AUDIO JACK		
		VEP88099A	P.C.BOARD W/COMPONENT	1	
			VIDEO JACK		
		VEP88106A	P.C.BOARD W/COMPONENT	1	
			SERIAL I/O		
		VEP81067A	P.C.BOARD W/COMPONENT	1	
			POWER 1		
		VEP81070A	P.C.BOARD W/COMPONENT	1	ON VEP81067A
			POWER 1 SUB		
		VEP81072A	P.C.BOARD W/COMPONENT	1	ON VEP81067A
			POWER 2 SUB		

Ref.No.		Part No.	Part Name & Description	Pcs	Remarks
		VEP81068A	P.C.BOARD W/COMPONENT	1	
			POWER 2		
		VEP81069A	P.C.BOARD W/COMPONENT	1	
			POWER 3		
		VEP80792A	P.C.BOARD W/COMPONENT	1	
			AUTO OFF LED		
		VEP80790A	P.C.BOARD W/COMPONENT	1	
			EJECT		
		VEP80804A	P.C.BOARD W/COMPONENT	1	
			ERR LED		
		VEP86131A	P.C.BOARD W/COMPONENT	1	
			HP JACK		
		VEP86130A	P.C.BOARD W/COMPONENT	1	ON VEP86131A
			HP VR		
		VEP86132A	P.C.BOARD W/COMPONENT	1	
			FR VR		
		VEP86126B	P.C.BOARD W/COMPONENT	1	
			FR CPU		
		VEP86129A	P.C.BOARD W/COMPONENT	1	ON VEP86126B
			CPU SUB		
		VEP86127A	P.C.BOARD W/COMPONENT	1	
			FR SW		
		VEP86128A	P.C.BOARD W/COMPONENT	1	
			FR LED		
		VFKO882	P.C.BOARD W/COMPONENT	1	
			S EXTENSION		
		VFKO883	P.C.BOARD W/COMPONENT	1	
			M EXTENSION		

M1 AV DSP VEP88095B
M SUB1 AV REC VEP88096B
M SUB2 V PROCESS VEP88097A

M1

M SUB2

M SUB2

Ref.No.		Part No.	Part Name & Description	Pcs	Remarks
M1	■	VEP88095B	P.C.BOARD W/COMPONENT		
			AV DSP		
M SUB1	■	VEP88096B	P.C.BOARD W/COMPONENT		FOR VEP88095B
			AV REC		
M SUB2	■	VEP88097A	P.C.BOARD W/COMPONENT		FOR VEP88095B
			V PROCESS		
			CAPACITORS		
C8001		ECEV1CV470	E.CAPACITOR 16V 47U	1	
C8001		ECUX1H103KBV	C.CAPACITOR CH 50V 0.01U	1	
C8001,02		ECUX1H103KBV	C.CAPACITOR CH 50V 0.01U	2	
C8002		ECUX1H103KBV	C.CAPACITOR CH 50V 0.01U	1	
C8002,03		ECUX1H103KBV	C.CAPACITOR CH 50V 0.01U	2	
C8003		ECUX1H103KBV	C.CAPACITOR CH 50V 0.01U	1	
C8003		ECUX1H103KBV	C.CAPACITOR CH 50V 0.01U	1	
C8004		ECEV1CV470	E.CAPACITOR 16V 47U	1	
C8004		ECUX1H103KBV	C.CAPACITOR CH 50V 0.01U	1	
C8004		ECUX1H103KBV	C.CAPACITOR CH 50V 0.01U	1	
C8005		ECEV1CV470	E.CAPACITOR 16V 47U	1	
C8005		ECUX1H103KBV	C.CAPACITOR CH 50V 0.01U	1	
C8005,06		ECUX1H103KBV	C.CAPACITOR CH 50V 0.01U	2	
C8006		ECUX1H103KBV	C.CAPACITOR CH 50V 0.01U	1	
C8006,07		ECUX1H103KBV	C.CAPACITOR CH 50V 0.01U	2	
C8007		ECUX1H103KBV	C.CAPACITOR CH 50V 0.01U	1	
C8007		ECUX1H103KBV	C.CAPACITOR CH 50V 0.01U	1	
C8008		ECEV1CV470	E.CAPACITOR 16V 47U	1	
C8008-10		ECUX1H103KBV	C.CAPACITOR CH 50V 0.01U	3	
C8010,11		ECUX1H103KBV	C.CAPACITOR CH 50V 0.01U	2	
C8011,12		ECUX1H103KBV	C.CAPACITOR CH 50V 0.01U	2	
C8012,13		ECUX1H103KBV	C.CAPACITOR CH 50V 0.01U	2	
C8013,14		ECUX1H103KBV	C.CAPACITOR CH 50V 0.01U	2	
C8014,15		ECUX1H103KBV	C.CAPACITOR CH 50V 0.01U	2	
C8015,16		ECUX1H103KBV	C.CAPACITOR CH 50V 0.01U	2	
C8016,17		ECUX1H103KBV	C.CAPACITOR CH 50V 0.01U	2	
C8017,18		ECUX1H103KBV	C.CAPACITOR CH 50V 0.01U	2	
C8018,19		ECUX1H103KBV	C.CAPACITOR CH 50V 0.01U	2	
C8019,20		ECUX1H103KBV	C.CAPACITOR CH 50V 0.01U	2	
C8020,21		ECUX1H103KBV	C.CAPACITOR CH 50V 0.01U	2	
C8021,22		ECUX1H103KBV	C.CAPACITOR CH 50V 0.01U	2	
C8022,23		ECUX1H103KBV	C.CAPACITOR CH 50V 0.01U	2	
C8023,24		ECUX1H103KBV	C.CAPACITOR CH 50V 0.01U	2	
C8024,25		ECUX1H103KBV	C.CAPACITOR CH 50V 0.01U	2	
C8025,26		ECUX1H103KBV	C.CAPACITOR CH 50V 0.01U	2	
C8026,27		ECUX1H103KBV	C.CAPACITOR CH 50V 0.01U	2	
C8027,28		ECUX1H103KBV	C.CAPACITOR CH 50V 0.01U	2	
C8028,29		ECUX1H103KBV	C.CAPACITOR CH 50V 0.01U	2	
C8029,30		ECUX1H103KBV	C.CAPACITOR CH 50V 0.01U	2	
C8030		ECUX1H103KBV	C.CAPACITOR CH 50V 0.01U	1	
C8031		ECUX1H103KBV	C.CAPACITOR CH 50V 0.01U	1	
C8031		ECUX1H103KBV	C.CAPACITOR CH 50V 0.01U	1	
C8032		ECUX1H103KBV	C.CAPACITOR CH 50V 0.01U	1	
C8032		ECUX1H103KBV	C.CAPACITOR CH 50V 0.01U	1	
C8033		ECUX1H103KBV	C.CAPACITOR CH 50V 0.01U	1	
C8033		ECUX1H103KBV	C.CAPACITOR CH 50V 0.01U	1	
C8034		ECUX1H103KBV	C.CAPACITOR CH 50V 0.01U	1	
C8034		ECUX1H103KBV	C.CAPACITOR CH 50V 0.01U	1	
C8035		ECUX1H103KBV	C.CAPACITOR CH 50V 0.01U	1	
C8035		ECUX1H103KBV	C.CAPACITOR CH 50V 0.01U	1	
C8036		ECUX1H103KBV	C.CAPACITOR CH 50V 0.01U	1	
C8036		ECUX1H103KBV	C.CAPACITOR CH 50V 0.01U	1	
C8037		ECUX1H103KBV	C.CAPACITOR CH 50V 0.01U	1	
C8037		ECUX1H103KBV	C.CAPACITOR CH 50V 0.01U	1	
C8038		ECUX1H103KBV	C.CAPACITOR CH 50V 0.01U	1	
C8039		ECUX1H103KBV	C.CAPACITOR CH 50V 0.01U	1	
C8040		ECUX1H103KBV	C.CAPACITOR CH 50V 0.01U	1	
C8040		ECUX1H103ZFV	C.CAPACITOR CH 50V 0.01U	1	
C8041		ECUX1H103KBV	C.CAPACITOR CH 50V 0.01U	1	
C8041		ECUX1H103ZFV	C.CAPACITOR CH 50V 0.01U	1	
C8042		ECUX1H103KBV	C.CAPACITOR CH 50V 0.01U	1	
C8042		ECUX1H103ZFV	C.CAPACITOR CH 50V 0.01U	1	
C8043		ECUX1H103KBV	C.CAPACITOR CH 50V 0.01U	1	
C8043		ECUX1H103ZFV	C.CAPACITOR CH 50V 0.01U	1	
C8044		ECUX1H103KBV	C.CAPACITOR CH 50V 0.01U	1	
C8044		ECUX1H103ZFV	C.CAPACITOR CH 50V 0.01U	1	
C8045		ECUX1H103KBV	C.CAPACITOR CH 50V 0.01U	1	
C8045		ECUX1H103ZFV	C.CAPACITOR CH 50V 0.01U	1	
C8046		ECUX1H103KBV	C.CAPACITOR CH 50V 0.01U	1	
C8046		ECUX1H103ZFV	C.CAPACITOR CH 50V 0.01U	1	
C8047		ECUX1H103KBV	C.CAPACITOR CH 50V 0.01U	1	
C8047		ECUX1H103ZFV	C.CAPACITOR CH 50V 0.01U	1	
C8048		ECUX1H103KBV	C.CAPACITOR CH 50V 0.01U	1	
C8049		ECUX1H103KBV	C.CAPACITOR CH 50V 0.01U	1	
C8050		ECUX1H103KBV	C.CAPACITOR CH 50V 0.01U	1	
C8051		ECUX1H103KBV	C.CAPACITOR CH 50V 0.01U	1	
C8052		ECUX1H103KBV	C.CAPACITOR CH 50V 0.01U	1	
C8053		ECUX1H103KBV	C.CAPACITOR CH 50V 0.01U	1	
C8054		ECUX1H103KBV	C.CAPACITOR CH 50V 0.01U	1	
C8055		ECUX1H103KBV	C.CAPACITOR CH 50V 0.01U	1	
C8056		ECUX1H103KBV	C.CAPACITOR CH 50V 0.01U	1	
C8056		ECUX1H103ZFV	C.CAPACITOR CH 50V 0.01U	1	
C8057		ECUX1H103KBV	C.CAPACITOR CH 50V 0.01U	1	
C8057		ECUX1H103ZFV	C.CAPACITOR CH 50V 0.01U	1	
C8058		ECUX1H103KBV	C.CAPACITOR CH 50V 0.01U	1	
C8058		ECUX1H103ZFV	C.CAPACITOR CH 50V 0.01U	1	
C8059		ECUX1H103KBV	C.CAPACITOR CH 50V 0.01U	1	
C8059		ECUX1H103ZFV	C.CAPACITOR CH 50V 0.01U	1	
C8060		ECUX1H103KBV	C.CAPACITOR CH 50V 0.01U	1	
C8060		ECUX1H103ZFV	C.CAPACITOR CH 50V 0.01U	1	
C8061		ECUX1H103KBV	C.CAPACITOR CH 50V 0.01U	1	
C8061		ECUX1H103ZFV	C.CAPACITOR CH 50V 0.01U	1	
C8062		ECUX1H103KBV	C.CAPACITOR CH 50V 0.01U	1	
C8062-69		ECUX1H103ZFV	C.CAPACITOR CH 50V 0.01U	8	
C8070		ECUX1H103KBV	C.CAPACITOR CH 50V 0.01U	1	
C8070		ECUX1H103ZFV	C.CAPACITOR CH 50V 0.01U	1	
C8071		ECUX1H103KBV	C.CAPACITOR CH 50V 0.01U	1	
C8071		ECUX1H103ZFV	C.CAPACITOR CH 50V 0.01U	1	
C8072		ECUX1H103KBV	C.CAPACITOR CH 50V 0.01U	1	
C8072		ECUX1H103ZFV	C.CAPACITOR CH 50V 0.01U	1	
C8073		ECUX1H103KBV	C.CAPACITOR CH 50V 0.01U	1	
C8073		ECUX1H103ZFV	C.CAPACITOR CH 50V 0.01U	1	
C8074		ECUX1H103KBV	C.CAPACITOR CH 50V 0.01U	1	
C8074		ECUX1H103ZFV	C.CAPACITOR CH 50V 0.01U	1	
C8075		ECUX1H103KBV	C.CAPACITOR CH 50V 0.01U	1	
C8075		ECUX1H103ZFV	C.CAPACITOR CH 50V 0.01U	1	
C8076		ECUX1H103KBV	C.CAPACITOR CH 50V 0.01U	1	
C8076		ECUX1H103ZFV	C.CAPACITOR CH 50V 0.01U	1	
C8077		ECUX1H103KBV	C.CAPACITOR CH 50V 0.01U	1	
C8077		ECUX1H103ZFV	C.CAPACITOR CH 50V 0.01U	1	
C8078		ECUX1H103KBV	C.CAPACITOR CH 50V 0.01U	1	
C8078		ECUX1H103ZFV	C.CAPACITOR CH 50V 0.01U	1	
C8079		ECUX1H103KBV	C.CAPACITOR CH 50V 0.01U	1	
C8079		ECUX1H103ZFV	C.CAPACITOR CH 50V 0.01U	1	
C8080		ECUX1H103KBV	C.CAPACITOR CH 50V 0.01U	1	
C8080		ECUX1H103ZFV	C.CAPACITOR CH 50V 0.01U	1	
C8081		ECUX1H103KBV	C.CAPACITOR CH 50V 0.01U	1	
C8081		ECUX1H103ZFV	C.CAPACITOR CH 50V 0.01U	1	
C8082		ECUX1H103KBV	C.CAPACITOR CH 50V 0.01U	1	
C8082-89		ECUX1H103ZFV	C.CAPACITOR CH 50V 0.01U	18	
C8279		ECUX1H121JCV	C.CAPACITOR 50V 120P	1	
C8280-85		ECEV1CV470	E.CAPACITOR 16V 47U	6	
C8286-90		ECUX1H103KBV	C.CAPACITOR CH 50V 0.01U	5	
C8300-04		ECUX1H103KBV	C.CAPACITOR CH 50V 0.01U	5	
C8305,06		ECEV1CV470	E.CAPACITOR 16V 47U	2	
C8307,08		ECUX1H103KBV	C.CAPACITOR CH 50V 0.01U	2	
C8500,01		ECEV1CV470	E.CAPACITOR 16V 47U	2	
C8502,03		ECUX1H103KBV	C.CAPACITOR CH 50V 0.01U	2	
C8504		ECEV1HN010	E.CAPACITOR 50V 1U	1	
C8505-07		ECUX1H103KBV	C.CAPACITOR CH 50V 0.01U	3	
C8508		ECUM1E104KBN	C.CAPACITOR 25V 0.1U	1	
C8509,10		ECUX1H103KBV	C.CAPACITOR CH 50V 0.01U	2	
C8511		ECUM1E104KBN	C.CAPACITOR 25V 0.1U	1	
C8512		ECUX1H103KBV	C.CAPACITOR CH 50V 0.01U	1	
C8513		ECUM1E104KBN	C.CAPACITOR 25V 0.1U	1	
C8514		ECUX1H820JCV	C.CAPACITOR CH 50V 82P	1	

Ref.No.		Part No.	Part Name & Description	Pcs	Remarks
C8516		ECUX1H103KBV	C.CAPACITOR CH 50V 0.01U	1	
C8517		ECUM1E104KBN	C.CAPACITOR 25V 0.1U	1	
C8518		ECUX1H103KBV	C.CAPACITOR CH 50V 0.01U	1	
C8519		ECUM1E104KBN	C.CAPACITOR 25V 0.1U	1	
C8520,21		ECUX1H470JCV	C.CAPACITOR 50V 47P	2	
C8522,23		ECUX1H103KBV	C.CAPACITOR CH 50V 0.01U	2	
C8524		ECA1HXKN2R2F	E.CAPACITOR 50V 2.2U	1	
C8525		ECEV1EV100	E.CAPACITOR 25V 10U	1	
C8526,27		ECUX1H103KBV	C.CAPACITOR CH 50V 0.01U	2	
C8528,29		ECUX1H330JCV	C.CAPACITOR 50V 33P	2	
C8530		ECUX1H103KBV	C.CAPACITOR CH 50V 0.01U	1	
C8531		ECUX1H102KBV	C.CAPACITOR 50V 1000P	1	
C8532-41		ECUX1H103KBV	C.CAPACITOR CH 50V 0.01U	10	
C8542,43		ECUX1H820JCV	C.CAPACITOR CH 50V 82P	2	
C8544,45		ECUX1H103KBV	C.CAPACITOR CH 50V 0.01U	2	
C8546		ECUX1H561JCV	C.CAPACITOR 50V 560P	1	
C8547		ECUX1H101JCV	C.CAPACITOR CH 50V 100P	1	
C8548,49		ECUX1H103KBV	C.CAPACITOR CH 50V 0.01U	2	
C8550		ECUX1H221JCV	C.CAPACITOR CH 50V 220P	1	
C8551		ECUM1E104KBN	C.CAPACITOR 25V 0.1U	1	
C8552,53		ECUX1H103KBV	C.CAPACITOR CH 50V 0.01U	2	
C8554		ECUX1H102KBV	C.CAPACITOR 50V 1000P	1	
C8555,56		ECUX1H103KBV	C.CAPACITOR CH 50V 0.01U	2	
C8557,58		ECUM1E104KBN	C.CAPACITOR 25V 0.1U	2	
C8559-66		ECEV1CV470	E.CAPACITOR 16V 47U	8	
C8567		ECEV1EV330	E.CAPACITOR 25V 33U	1	
C8568,69		ECEV1CV470	E.CAPACITOR 16V 47U	2	
C8570,71		ECEV1EV330	E.CAPACITOR 25V 33U	2	
C8572,73		ECEV1CV470	E.CAPACITOR 16V 47U	2	
C8574		ECEV1EV330	E.CAPACITOR 25V 33U	1	
C8575-90		ECUX1H103KBV	C.CAPACITOR CH 50V 0.01U	16	
C8591		ECEV1HN010	E.CAPACITOR 50V 1U	1	
C8592		ECEV1CV470	E.CAPACITOR 16V 47U	1	
C8593-95		ECUX1H103KBV	C.CAPACITOR CH 50V 0.01U	3	
C8596		ECUX1H820JCV	C.CAPACITOR CH 50V 82P	1	
C8597,98		ECUX1H103KBV	C.CAPACITOR CH 50V 0.01U	2	
C8599		ECUX1H472KBV	C.CAPACITOR 50V 4700P	1	
C8600		ECUX1H103KBV	C.CAPACITOR CH 50V 0.01U	1	
C8601		ECUX1H330JCV	C.CAPACITOR 50V 33P	1	
C8602		ECUM1E104KBN	C.CAPACITOR 25V 0.1U	1	
C8603		ECUX1H180JCV	C.CAPACITOR 50V 18P	1	
C8604		ECUX1H680JCV	C.CAPACITOR 50V 68P	1	
C8605,06		ECUM1E104KBN	C.CAPACITOR 25V 0.1U	2	
C8680-88		ECUX1H103KBV	C.CAPACITOR CH 50V 0.01U	9	
C8801		ECEV1CV470	E.CAPACITOR 16V 47U	1	
C8802		ECEV1CV100	E.CAPACITOR 16V 10U	1	
C8803		ECEV1CV470	E.CAPACITOR 16V 47U	1	
C8804		ECEV1CV100	E.CAPACITOR 16V 10U	1	
C8805		ECUX1H101JCV	C.CAPACITOR CH 50V 100P	1	
C8806,07		ECUX1H103KBV	C.CAPACITOR CH 50V 0.01U	2	
C8808		ECUX1H121JCV	C.CAPACITOR 50V 120P	1	
C8809,10		ECUX1H103KBV	C.CAPACITOR CH 50V 0.01U	2	
C8811		ECUX1H101JCV	C.CAPACITOR CH 50V 100P	1	
C8812,13		ECUX1H103KBV	C.CAPACITOR CH 50V 0.01U	2	
C8814		ECUX1H121JCV	C.CAPACITOR 50V 120P	1	
C8815,16		ECUX1H103KBV	C.CAPACITOR CH 50V 0.01U	2	
C8817,18		ECEV1HV2R2	E.CAPACITOR 50V 2.2U	2	
C8819-24		ECUX1H103KBV	C.CAPACITOR CH 50V 0.01U	6	
C8825-27		ECEV1CV100	E.CAPACITOR 16V 10U	3	
C8828		ECEV1HV0R1	E.CAPACITOR 50V 0.1U	1	
C8829		ECEV1HNR22	E.CAPACITOR 50V 0.22U	1	
C8830-32		ECEV1HV0R1	E.CAPACITOR 50V 0.1U	3	
C8833-35		ECEV1CV470	E.CAPACITOR 16V 47U	3	
C8836		ECUX1H180JCV	C.CAPACITOR 50V 18P	1	
C8837-39		ECUX1H470JCV	C.CAPACITOR 50V 47P	3	
C8840-51		ECUX1H103KBV	C.CAPACITOR CH 50V 0.01U	12	
C8852		ECEV1EV100	E.CAPACITOR 25V 10U	1	
C8853,54		ECEV1CV470	E.CAPACITOR 16V 47U	2	
C8855,56		ECEV1CV100	E.CAPACITOR 16V 10U	2	
C8857-59		ECUX1H103KBV	C.CAPACITOR CH 50V 0.01U	3	
C8860		ECUX1H220JCV	C.CAPACITOR CH 50V 22P	1	
C8861-68		ECUX1H103KBV	C.CAPACITOR CH 50V 0.01U	8	
C8869		ECUX1H472KBV	C.CAPACITOR 50V 4700P	1	
C8870,71		ECUX1H103KBV	C.CAPACITOR CH 50V 0.01U	2	
C8872		ECUX1H472KBV	C.CAPACITOR 50V 4700P	1	

Ref.No.		Part No.	Part Name & Description	Pcs	Remarks
C8873		ECEV1CV470	E.CAPACITOR 16V 47U	1	
C8874,75		ECUX1H103KBV	C.CAPACITOR CH 50V 0.01U	2	
C8895		ECEV1CV470	E.CAPACITOR 16V 47U	1	
C8896-00		ECUX1H103KBV	C.CAPACITOR CH 50V 0.01U	5	
C8901		ECUX1H150JCV	C.CAPACITOR 50V 15P	1	
C8902		ECEV1CV470	E.CAPACITOR 16V 47U	1	
C8903,04		ECUX1H103KBV	C.CAPACITOR CH 50V 0.01U	2	
C8905		ECEV1EV330	E.CAPACITOR 25V 33U	1	
C8906-08		ECUX1H103KBV	C.CAPACITOR CH 50V 0.01U	3	
C8909,10		ECEV1EV330	E.CAPACITOR 25V 33U	2	
C8911-13		ECUX1H103KBV	C.CAPACITOR CH 50V 0.01U	3	
C8914		ECEV1EV330	E.CAPACITOR 25V 33U	1	
C8915-19		ECEV1EV100	E.CAPACITOR 25V 10U	5	
C8920-23		ECUX1H103KBV	C.CAPACITOR CH 50V 0.01U	4	
D8280		MA151K	DIODE	1	
D8500		MA151K	DIODE	1	
D8501		MA335-R	DIODE	1	
D8502		MA151WK	DIODE	1	
D8503		MA717	DIODE	1	
D8801-04		MA151K	DIODE	4	
FL8001,02		VLF0931	COIL	2	
FL8280,81		VLF0931	COIL	2	
FL8300,01		VLF0576	FILTER	2	
FL8500		VLF0931	COIL	1	
FL8501-04		VLF0576	FILTER	4	
FL8801		VLF0928	FILTER	1	
FL8802-06		VLF0576	FILTER	5	
IC8001		SN74AS244NS	IC	1	
IC8001		SN74AS244NS	IC	1	
IC8002		L7A0650	IC	1	
IC8002		SN74AS244NS	IC	1	
IC8003		L7A0348	IC	1	
IC8003		UPD65240GC057	IC	1	
IC8004		SN74ALS541NS	IC	1	
IC8004		SN74LS682NS	IC	1	
IC8005		L7A0649	IC	1	
IC8005		MC74HC04AF	IC	1	
IC8006		SN74ALS541NS	IC	1	
IC8006		UPD42280GU3E	IC	1	
IC8007		CXD2105AQ	IC	1	
IC8007		VSC3KI007FL	IC	1	
IC8008		CXD2105AQ	IC	1	
IC8010		MC10H116M	IC	1	
IC8010,11		MC74HC574AF	IC	2	
IC8012		L7A1041	IC	1	
IC8012		MC74HC541F	IC	1	
IC8013		M5256BVP-70L	IC	1	
IC8014		HM628128LT7	IC	1	
IC8015		D65658GM068	IC	1	
IC8015		M5256BVP-70L	IC	1	
IC8016		HM628128LT7	IC	1	
IC8017		M5256BVP-70L	IC	1	
IC8017		SN74ALS541NS	IC	1	
IC8018		HM628128LT7	IC	1	
IC8018		UPD42280GU3E	IC	1	
IC8019		M5256BVP-70L	IC	1	
IC8019		UPD42280GU3E	IC	1	
IC8020		HM628128LT7	IC	1	
IC8020,21		MC74HC574AF	IC	2	
IC8021		SLA6080F5B	IC	1	
IC8022		MB81C78A35PF	IC	1	
IC8022		MC74HC574AF	IC	1	
IC8023		L7A0674	IC	1	
IC8023,24		MC74HC574AF	IC	2	
IC8024		M5278J-35	IC	1	
IC8025		MC74HC574AF	IC	1	

Ref.No.	Part No.	Part Name & Description	Pcs	Remarks
IC8025	M5278J-35	IC	1	
IC8026	MC74HC574AF	IC	1	
IC8026	SN74ALS541NS	IC	1	
IC8027	MC74HC541F	IC	1	
IC8027	SN74ALS541NS	IC	1	
IC8028	MC74HC541F	IC	1	
IC8028	SN74HCT541N	IC	1	
IC8030	74F574SJ	IC	1	
IC8031-35	UPD42102G-3	IC	5	
IC8036	L7A0344	IC	1	
IC8038	74F574SJ	IC	1	
IC8039	SN74AS244NS	IC	1	
IC8050,51	SN74LS541NS	IC	2	
IC8052	SN74AS257NS	IC	1	
IC8053	SN74AS244NS	IC	1	
IC8054-56	MC10H125M	IC	3	
IC8057	VSI1353	IC	1	
IC8100,01	UPD42101G-3	IC	2	
IC8102,03	SN74LS541NS	IC	2	
IC8104,05	MC74HC574AF	IC	2	
IC8106,07	MC74HC164F	IC	2	
IC8108	74F521SJ	IC	1	
IC8109,10	SN74AS244NS	IC	2	
IC8111	SN74AS240NS	IC	1	
IC8112-15	MC10H124M	IC	4	
IC8201-03	UPD71055GB	IC	3	
IC8204	MC74HC00AF	IC	1	
IC8205-07	SN74ALS541NS	IC	3	
IC8208	SN74ALS245AS	IC	1	
IC8209	MC74HC32AF	IC	1	
IC8211	MC74HC32AF	IC	1	
IC8214,15	MC74HC27F	IC	2	
IC8220-22	MC74HC138AF	IC	3	
IC8224	MC74HC10F	IC	1	
IC8226	MC74HC04AF	IC	1	
IC8230-32	SN74S1051NS	IC	3	
IC8233,34	SN74S1053NS	IC	2	
IC8235-38	SN74S1051NS	IC	4	
IC8282	UPC337H	IC	1	
IC8300	MC74HC74AF	IC	1	
IC8302,03	MC74HC574AF	IC	2	
IC8304,05	MC74HC541F	IC	2	
IC8306	L7A0754	IC	1	
IC8307	L7A1041	IC	1	
IC8308	L7A0855	IC	1	
IC8309	MC74HC157AF	IC	1	
IC8310	MC74HCU04F	IC	1	
IC8315	M5278J-35	IC	1	
IC8316	M5257AJ-35	IC	1	
IC8317	CXK58102J3	IC	1	
IC8321	M5278J-35	IC	1	
IC8322	M5257AJ-35	IC	1	
IC8323	CXK58102J3	IC	1	
IC8327	M5278J-35	IC	1	
IC8328	M5257AJ-35	IC	1	
IC8329	CXK58102J3	IC	1	
IC8333	M5278J-35	IC	1	
IC8334	M5257AJ-35	IC	1	
IC8335	CXK58102J3	IC	1	
IC8339	M5278J-35	IC	1	
IC8340	M5257AJ-35	IC	1	
IC8341	CXK58102J3	IC	1	
IC8342	SN74AS10NS	IC	1	
IC8343	SN74AS04NS	IC	1	
IC8345	M5278J-35	IC	1	
IC8346	M5257AJ-35	IC	1	
IC8347	CXK58102J3	IC	1	
IC8348	SN74AS10NS	IC	1	
IC8349	SN74AS04NS	IC	1	
IC8351	UPD65664G039	IC	1	
IC8352,53	L7A0754	IC	2	
IC8354,55	L7A0755	IC	2	
IC8356	MB121M246	IC	1	
IC8357	SN74S1051NS	IC	1	
IC8358	MB10HL116PFF	IC	1	

Ref.No.	Part No.	Part Name & Description	Pcs	Remarks
IC8362	MB10HL116PFF	IC	1	
IC8500	L7A0837	IC	1	
IC8501	L7A0543	IC	1	
IC8502	74F574SJ	IC	1	
IC8503	SN74AS74NS	IC	1	
IC8505	SN74AS244NS	IC	1	
IC8506	SN74AS240NS	IC	1	
IC8507	DAC10GS	IC	1	
IC8510	SN74LS123NS	IC	1	
IC8512	MC74HC86F	IC	1	
IC8516-18	MC74HC574AF	IC	3	
IC8521	74F112SJ	IC	1	
IC8524	NJM084M	IC	1	
IC8528	NE521D	IC	1	
IC8530	MC74HC4053F	IC	1	
IC8531	SN74AS244NS	IC	1	
IC8532	NJM082BM	IC	1	
IC8534	SLA7220F5A	IC	1	
IC8535	SN74LS221NS	IC	1	
IC8536	VSI1354	IC	1	
IC8537	MC74HC02AF	IC	1	
IC8539	SN74AS109NS	IC	1	
IC8540	L7A0756	IC	1	
IC8541	SN74LS221NS	IC	1	
IC8543	UPC624C	IC	1	
IC8544	SN74LS05NS	IC	1	
IC8545	MC74HC574AF	IC	1	
IC8546	NJM4558M	IC	1	
IC8548	NJM360M	IC	1	
IC8549,50	NJM79L12UA	IC	2	
IC8551	NJM79L05UA	IC	1	
IC8552,53	NJM78L12UA	IC	2	
IC8554	NJM78L09UA	IC	1	
IC8555,56	NJM78L05UA	IC	2	
IC8557	NE521D	IC	1	
IC8558	AN91A12S	IC	1	
IC8559	VSI1355	IC	1	
IC8560	SN74AS257NS	IC	1	
IC8801	SN74HCT541N	IC	1	
IC8802,03	UPD42101G-3	IC	2	
IC8806,07	MN4464S08L	IC	2	
IC8808,09	MB621926	IC	2	
IC8810,11	L7A0541	IC	2	
IC8812	VSI1357	IC	1	
IC8813,14	NJM78L05UA	IC	2	
IC8815	MC74HC74AF	IC	1	
IC8817	MC74HC74AF	IC	1	
IC8819	MC74HC04AF	IC	1	
IC8821	74AC157SJ	IC	1	
IC8822	74AC08SJ	IC	1	
IC8824	74AC04SJ	IC	1	
IC8826	SN74LS123NS	IC	1	
IC8827	MN56200VPV	IC	1	
IC8828	L7A0651	IC	1	
IC8829	SN74ALS541NS	IC	1	
IC8830	MC74HC74AF	IC	1	
IC8831-33	MC74HC541F	IC	3	
IC8834	MC74HC08AF	IC	1	
IC8836	MC10H124M	IC	1	
IC8841-43	MC4044M	IC	3	
IC8844-46	NJM78L05UA	IC	3	
IC8847	MC74HC157AF	IC	1	
IC8850	74AC08SJ	IC	1	
IC8854	74AC04SJ	IC	1	
IC8857	VSI1358	IC	1	
IC8858	MC74HC541F	IC	1	
IC8859	MB620859PFV	IC	1	
IC8860	L7A0782	IC	1	
IC8861	MB81C79A35PF	IC	1	
IC8862	MB620859PFV	IC	1	
IC8863	MB8289-25PF	IC	1	
IC8864	74F11SJ	IC	1	
IC8865	MB8289-25PF	IC	1	
IC8867	MB8289-25PF	IC	1	
IC8869	L7A0754	IC	1	

Ref.No.		Part No.	Part Name & Description	Pcs	Remarks
IC8870		MN8305S	IC	1	
IC8871		NJM78L05UA	IC	1	
IC8872		NJM4580ED	IC	1	
IC8874		NJM4580ED	IC	1	
IC8876		SN74ALS541NS	IC	1	
IC8877		NJM78L12UA	IC	1	
IC8878		NJM79L12UA	IC	1	
IC8879		MC74HC157AF	IC	1	
IC8880		MC74HC541F	IC	1	
IC8881		MB81C4256A80	IC	1	
IC8882		MB621926	IC	1	
IC8883		VSI1359	IC	1	
IC8884		MC74HC157AF	IC	1	
IC8885,86		MC74HC163AF	IC	2	
ICS8009		VJS3396	CONNECTOR (FEMALE)	1	
ICS8057		VJS3396	CONNECTOR (FEMALE)	1	
ICS8536		VJS3396	CONNECTOR (FEMALE)	1	
ICS8559		VJS3396	CONNECTOR (FEMALE)	1	
ICS8812		VJS3096328	CONNECTOR (FEMALE)	1	
ICS8857		VJS3096328	CONNECTOR (FEMALE)	1	
ICS8883		VJS3109	CONNECTOR (FEMALE)	1	
L8001		VLQ0576	COIL	1	
L8001		VLQ0576	COIL	1	
L8001,02		VLQ0576	COIL	2	
L8002		VLQ0576	COIL	1	
L8002,03		VLQ0576	COIL	2	
L8003,04		VLQ0576	COIL	2	
L8004,05		VLQ0576	COIL	2	
L8005,06		VLQ0576	COIL	2	
L8006,07		VLQ0576	COIL	2	
L8007,08		VLQ0576	COIL	2	
L8008,09		VLQ0576	COIL	2	
L8009,10		VLQ0576	COIL	2	
L8300		VLQ0576	COIL	1	
L8300,01		VLQ0576	COIL	2	
L8301-11		VLQ0576	COIL	11	
L8500		VLQ0163J221	COIL 220UH	1	
L8501		VLQ0163J390	COIL 39UH	1	
L8502		VLQ0163J221	COIL 220UH	1	
L8700-08		VLQ0576	COIL	9	
L8709		ERJ6GEY0R00	COIL	1	
L8710-12		VLQ0576	COIL	3	
P8001,02		VJS3426A060	CONNECTOR (FEMALE)	2	
P8221,22		VJP3454B096	CONNECTOR (MALE)	2	
P8280,81		VJP3409A060	CONNECTOR (MALE)	2	
P8500		VJP3409A080	CONNECTOR (MALE)	1	
P8500		VJS3425A080	CONNECTOR (FEMALE)	1	
P8501		VJP3409A080	CONNECTOR (MALE)	1	
P8501		VJS3425A080	CONNECTOR (FEMALE)	1	
Q8500		2SB709-R	TRANSISTOR CHIP	1	(R)
Q8501,02		2SK608-QR	TRANSISTOR	2	
Q8503		2SB709-R	TRANSISTOR CHIP	1	(R)
Q8801-06		2SC4444	TRANSISTOR	6	
Q8807,08		2SJ163-QR	TRANSISTOR	2	
			RESISTORS		
R8001		ERJ3GEYJ101	M.RESISTOR CH 1/16W 100	1	
R8001,02		ERJ3GEYJ101	M.RESISTOR CH 1/16W 100	2	
R8002		ERJ3GEYJ103	M.RESISTOR CH 1/16W 10K	1	
R8003		ERJ3GEYJ101	M.RESISTOR CH 1/16W 100	1	
R8003		ERJ3GEYJ103	M.RESISTOR CH 1/16W 10K	1	
R8004		ERJ3GEYJ101	M.RESISTOR CH 1/16W 100	1	
R8004,05		ERJ3GEYJ103	M.RESISTOR CH 1/16W 10K	2	
R8005,06		ERJ3GEYJ103	M.RESISTOR CH 1/16W 10K	2	

Ref.No.		Part No.	Part Name & Description	Pcs	Remarks
R8006,07		ERJ3GEYJ103	M.RESISTOR CH 1/16W 10K	2	
R8007,08		ERJ3GEYJ103	M.RESISTOR CH 1/16W 10K	2	
R8008		ERJ3GEYJ331	M.RESISTOR CH 1/16W 330	1	
R8009		ERJ3GEYJ103	M.RESISTOR CH 1/16W 10K	1	
R8009,10		ERJ3GEYJ103	M.RESISTOR CH 1/16W 10K	2	
R8010		ERJ3GEYJ103	M.RESISTOR CH 1/16W 10K	1	
R8011		ERJ3GEYJ101	M.RESISTOR CH 1/16W 100	1	
R8011,12		ERJ3GEYJ103	M.RESISTOR CH 1/16W 10K	2	
R8012,13		ERJ3GEYJ103	M.RESISTOR CH 1/16W 10K	2	
R8013,14		ERJ3GEYJ103	M.RESISTOR CH 1/16W 10K	2	
R8014,15		ERJ3GEYJ103	M.RESISTOR CH 1/16W 10K	2	
R8015,16		ERJ3GEYJ103	M.RESISTOR CH 1/16W 10K	2	
R8016,17		ERJ3GEYJ103	M.RESISTOR CH 1/16W 10K	2	
R8017		ERJ3GEYJ560	M.RESISTOR CH 1/16W 56	1	
R8018		ERJ3GEYJ101	M.RESISTOR CH 1/16W 100	1	
R8018		ERJ3GEYJ560	M.RESISTOR CH 1/16W 56	1	
R8019		ERJ3GEYJ101	M.RESISTOR CH 1/16W 100	1	
R8019		ERJ3GEYJ560	M.RESISTOR CH 1/16W 56	1	
R8020		ERJ3GEYJ103	M.RESISTOR CH 1/16W 10K	1	
R8020		ERJ3GEYJ560	M.RESISTOR CH 1/16W 56	1	
R8021		ERJ3GEYJ103	M.RESISTOR CH 1/16W 10K	1	
R8021		ERJ3GEYJ560	M.RESISTOR CH 1/16W 56	1	
R8022		ERJ3GEYJ103	M.RESISTOR CH 1/16W 10K	1	
R8022		ERJ3GEYJ560	M.RESISTOR CH 1/16W 56	1	
R8023		ERJ3GEYJ103	M.RESISTOR CH 1/16W 10K	1	
R8023		ERJ3GEYJ391	M.RESISTOR CH 1/16W 390	1	
R8024		ERJ3GEYJ103	M.RESISTOR CH 1/16W 10K	1	
R8024		ERJ3GEYJ391	M.RESISTOR CH 1/16W 390	1	
R8025		ERJ3GEYJ103	M.RESISTOR CH 1/16W 10K	1	
R8025		ERJ3GEYJ391	M.RESISTOR CH 1/16W 390	1	
R8026		ERJ3GEYJ103	M.RESISTOR CH 1/16W 10K	1	
R8026		ERJ3GEYJ391	M.RESISTOR CH 1/16W 390	1	
R8027		ERJ3GEYJ103	M.RESISTOR CH 1/16W 10K	1	
R8027		ERJ3GEYJ391	M.RESISTOR CH 1/16W 390	1	
R8028		ERJ3GEYJ103	M.RESISTOR CH 1/16W 10K	1	
R8028		ERJ3GEYJ391	M.RESISTOR CH 1/16W 390	1	
R8029		ERJ3GEYJ103	M.RESISTOR CH 1/16W 10K	1	
R8029		ERJ3GEYJ391	M.RESISTOR CH 1/16W 390	1	
R8030		ERJ3GEYJ101	M.RESISTOR CH 1/16W 100	1	
R8030		ERJ3GEYJ391	M.RESISTOR CH 1/16W 390	1	
R8031		ERJ3GEYJ103	M.RESISTOR CH 1/16W 10K	1	
R8031		ERJ3GEYJ391	M.RESISTOR CH 1/16W 390	1	
R8032		ERJ3GEYJ101	M.RESISTOR CH 1/16W 100	1	
R8032		ERJ3GEYJ391	M.RESISTOR CH 1/16W 390	1	
R8033		ERJ3GEYJ103	M.RESISTOR CH 1/16W 10K	1	
R8033		ERJ3GEYJ391	M.RESISTOR CH 1/16W 390	1	
R8034		ERJ3GEYJ101	M.RESISTOR CH 1/16W 100	1	
R8034		ERJ3GEYJ391	M.RESISTOR CH 1/16W 390	1	
R8035		ERJ3GEYJ103	M.RESISTOR CH 1/16W 10K	1	
R8035		ERJ3GEYJ391	M.RESISTOR CH 1/16W 390	1	
R8036		ERJ3GEYJ101	M.RESISTOR CH 1/16W 100	1	
R8037		ERJ3GEYJ102	M.RESISTOR CH 1/16W 1K	1	
R8037,38		ERJ3GEYJ103	M.RESISTOR CH 1/16W 10K	2	
R8038		ERJ3GEYJ511	M.RESISTOR CH 3W 510	1	
R8039		ERJ3GEYJ103	M.RESISTOR CH 1/16W 10K	1	
R8039		ERJ3GEYJ103	M.RESISTOR CH 1/16W 10K	1	
R8040		ERJ3GEYJ101	M.RESISTOR CH 1/16W 100	1	
R8040,41		ERJ3GEYJ103	M.RESISTOR CH 1/16W 10K	2	
R8041		ERJ3GEYJ103	M.RESISTOR CH 1/16W 10K	1	
R8042		ERJ3GEYJ101	M.RESISTOR CH 1/16W 100	1	
R8042,43		ERJ3GEYJ101	M.RESISTOR CH 1/16W 100	2	
R8043		ERJ3GEYJ103	M.RESISTOR CH 1/16W 10K	1	
R8044		ERJ3GEYJ101	M.RESISTOR CH 1/16W 100	1	
R8044		ERJ3GEYJ102	M.RESISTOR CH 1/16W 1K	1	
R8045		ERJ3GEYJ101	M.RESISTOR CH 1/16W 100	1	
R8045		ERJ3GEYJ103	M.RESISTOR CH 1/16W 10K	1	
R8046		ERJ3GEYJ101	M.RESISTOR CH 1/16W 100	1	
R8046		ERJ3GEYJ103	M.RESISTOR CH 1/16W 10K	1	
R8047		ERJ3GEYJ101	M.RESISTOR CH 1/16W 100	1	
R8047		ERJ3GEYJ103	M.RESISTOR CH 1/16W 10K	1	
R8048		ERJ3GEYJ101	M.RESISTOR CH 1/16W 100	1	
R8048		ERJ3GEYJ103	M.RESISTOR CH 1/16W 10K	1	
R8049		ERJ3GEYJ101	M.RESISTOR CH 1/16W 100	1	
R8049		ERJ3GEYJ102	M.RESISTOR CH 1/16W 1K	1	
R8050		ERJ3GEYJ101	M.RESISTOR CH 1/16W 100	1	

Ref.No.	Part No.	Part Name & Description	Pcs	Remarks
R8050	ERJ3GEYJ101	M.RESISTOR CH 1/16W 100	1	
R8050	ERJ3GEYJ102	M.RESISTOR CH 1/16W 1K	1	
R8051	ERJ3GEYJ101	M.RESISTOR CH 1/16W 100	1	
R8051	ERJ3GEYJ102	M.RESISTOR CH 1/16W 1K	1	
R8051	ERJ3GEYJ103	M.RESISTOR CH 1/16W 10K	1	
R8052	ERJ3GEYJ101	M.RESISTOR CH 1/16W 100	1	
R8052	ERJ3GEYJ101	M.RESISTOR CH 1/16W 100	1	
R8052	ERJ3GEYJ102	M.RESISTOR CH 1/16W 1K	1	
R8053	ERJ3GEYJ101	M.RESISTOR CH 1/16W 100	1	
R8053	ERJ3GEYJ101	M.RESISTOR CH 1/16W 100	1	
R8053	ERJ3GEYJ103	M.RESISTOR CH 1/16W 10K	1	
R8054	ERJ3GEYJ101	M.RESISTOR CH 1/16W 100	1	
R8054	ERJ3GEYJ101	M.RESISTOR CH 1/16W 100	1	
R8054	ERJ3GEYJ103	M.RESISTOR CH 1/16W 10K	1	
R8055	ERJ3GEYJ101	M.RESISTOR CH 1/16W 100	1	
R8055	ERJ3GEYJ101	M.RESISTOR CH 1/16W 100	1	
R8055	ERJ3GEYJ103	M.RESISTOR CH 1/16W 10K	1	
R8056	ERJ3GEYJ101	M.RESISTOR CH 1/16W 100	1	
R8056	ERJ3GEYJ101	M.RESISTOR CH 1/16W 100	1	
R8056	ERJ3GEYJ103	M.RESISTOR CH 1/16W 10K	1	
R8057	ERJ3GEYJ101	M.RESISTOR CH 1/16W 100	1	
R8057	ERJ3GEYJ101	M.RESISTOR CH 1/16W 100	1	
R8057	ERJ3GEYJ103	M.RESISTOR CH 1/16W 10K	1	
R8058	ERJ3GEYJ101	M.RESISTOR CH 1/16W 100	1	
R8058	ERJ3GEYJ101	M.RESISTOR CH 1/16W 100	1	
R8058	ERJ3GEYJ103	M.RESISTOR CH 1/16W 10K	1	
R8059	ERJ3GEYJ101	M.RESISTOR CH 1/16W 100	1	
R8059	ERJ3GEYJ101	M.RESISTOR CH 1/16W 100	1	
R8059	ERJ3GEYJ103	M.RESISTOR CH 1/16W 10K	1	
R8060	ERJ3GEYJ101	M.RESISTOR CH 1/16W 100	1	
R8060	ERJ3GEYJ101	M.RESISTOR CH 1/16W 100	1	
R8060	ERJ3GEYJ103	M.RESISTOR CH 1/16W 10K	1	
R8061	ERJ3GEYJ101	M.RESISTOR CH 1/16W 100	1	
R8061	ERJ3GEYJ101	M.RESISTOR CH 1/16W 100	1	
R8061	ERJ3GEY0R00	M.RESISTOR CH 1/16W 0	1	
R8062	ERJ3GEYJ101	M.RESISTOR CH 1/16W 100	1	
R8062	ERJ3GEYJ101	M.RESISTOR CH 1/16W 100	1	
R8062	ERJ3GEY0R00	M.RESISTOR CH 1/16W 0	1	
R8063	ERJ3GEYJ101	M.RESISTOR CH 1/16W 100	1	
R8063	ERJ3GEYJ101	M.RESISTOR CH 1/16W 100	1	
R8063	ERJ3GEY0R00	M.RESISTOR CH 1/16W 0	1	
R8064	ERJ3GEYJ103	M.RESISTOR CH 1/16W 10K	1	
R8064	ERJ3GEY0R00	M.RESISTOR CH 1/16W 0	1	
R8065	ERJ3GEYJ101	M.RESISTOR CH 1/16W 100	1	
R8065	ERJ3GEY0R00	M.RESISTOR CH 1/16W 0	1	
R8066	ERJ3GEYJ101	M.RESISTOR CH 1/16W 100	1	
R8066	ERJ3GEYJ102	M.RESISTOR CH 1/16W 1K	1	
R8066	ERJ3GEYJ331	M.RESISTOR CH 1/16W 330	1	
R8067	ERJ3GEYJ103	M.RESISTOR CH 1/16W 10K	1	
R8068,69	ERJ3GEYJ101	M.RESISTOR CH 1/16W 100	2	
R8069	ERJ3GEYJ102	M.RESISTOR CH 1/16W 1K	1	
R8070	ERJ3GEYJ101	M.RESISTOR CH 1/16W 100	1	
R8070	ERJ3GEYJ102	M.RESISTOR CH 1/16W 1K	1	
R8070	ERJ3GEYJ560	M.RESISTOR CH 1/16W 56	1	
R8071	ERJ3GEYJ103	M.RESISTOR CH 1/16W 10K	1	
R8071	ERJ3GEYJ560	M.RESISTOR CH 1/16W 56	1	
R8072	ERJ3GEY0R00	M.RESISTOR CH 1/16W 0	1	
R8080-92	ERJ3GEYJ221	M.RESISTOR CH 1/16W 220	13	
R8100-17	ERJ3GEYJ471	M.RESISTOR CH 1/16W 470	18	
R8118-25	ERJ3GEYJ101	M.RESISTOR CH 1/16W 100	8	
R8126,27	ERJ3GEYJ471	M.RESISTOR CH 1/16W 470	2	
R8129,30	ERJ3GEYJ471	M.RESISTOR CH 1/16W 470	2	
R8132-38	ERJ3GEYJ101	M.RESISTOR CH 1/16W 100	7	
R8139-46	ERJ3GEYJ471	M.RESISTOR CH 1/16W 470	8	
R8147-51	ERJ3GEYJ101	M.RESISTOR CH 1/16W 100	5	
R8152-59	ERJ3GEYJ102	M.RESISTOR CH 1/16W 1K	8	
R8160	ERJ3GEYJ101	M.RESISTOR CH 1/16W 100	1	
R8161,62	ERJ3GEYJ102	M.RESISTOR CH 1/16W 1K	2	
R8163	ERJ3GEYJ101	M.RESISTOR CH 1/16W 100	1	
R8167	ERJ3GEY0R00	M.RESISTOR CH 1/16W 0	1	
R8172	ERJ3GEYJ101	M.RESISTOR CH 1/16W 100	1	
R8173-78	ERJ3GEYJ330	M.RESISTOR CH 1/16W 33	6	
R8180-99	ERJ3GEYJ330	M.RESISTOR CH 1/16W 33	20	
R8201	ERJ3GEYJ471	M.RESISTOR CH 1/16W 470	1	
R8202-17	ERJ3GEYJ152	M.RESISTOR CH 1/16W 1.5K	16	

Ref.No.	Part No.	Part Name & Description	Pcs	Remarks
R8218-25	ERJ3GEYJ332	M.RESISTOR CH 1/16W 3.3K	8	
R8280	VRE0034E121	M.RESISTOR CH 1/10W 120	1	
R8281	VRE0034E750	M.RESISTOR CH 1/10W 75	1	
R8300-41	ERJ3GEYJ102	M.RESISTOR CH 1/16W 1K	42	
R8343-18	ERJ3GEYJ102	M.RESISTOR CH 1/16W 1K	76	
R8419	ERJ3GEYJ100	M.RESISTOR CH 1/16W 10	1	
R8420,21	ERJ3GEYJ560	M.RESISTOR CH 1/16W 56	2	
R8422-25	ERJ3GEYJ471	M.RESISTOR CH 1/16W 470	4	
R8426,27	ERJ3GEYJ560	M.RESISTOR CH 1/16W 56	2	
R8429,30	ERJ3GEYJ560	M.RESISTOR CH 1/16W 56	2	
R8431-34	ERJ3GEYJ471	M.RESISTOR CH 1/16W 470	4	
R8435,36	ERJ3GEYJ560	M.RESISTOR CH 1/16W 56	2	
R8500,01	ERJ3GEYJ102	M.RESISTOR CH 1/16W 1K	2	
R8502,03	ERJ3GEYJ100	M.RESISTOR CH 1/16W 10	2	
R8504-22	ERJ3GEYJ102	M.RESISTOR CH 1/16W 1K	19	
R8524,25	ERJ3GEYJ102	M.RESISTOR CH 1/16W 1K	2	
R8526	ERJ3GEY0R00	M.RESISTOR CH 1/16W 0	1	
R8528-31	ERJ3GEYJ102	M.RESISTOR CH 1/16W 1K	4	
R8533-49	ERJ3GEYJ102	M.RESISTOR CH 1/16W 1K	17	
R8555	ERJ3GEYJ101	M.RESISTOR CH 1/16W 100	1	
R8556,57	ERJ3GEYJ102	M.RESISTOR CH 1/16W 1K	2	
R8558	ERJ3GEYJ101	M.RESISTOR CH 1/16W 100	1	
R8560-61	ERJ3GEY0R00	M.RESISTOR CH 1/16W 0	2	
R8563	ERJ3GEY0R00	M.RESISTOR CH 1/16W 0	1	
R8567	ERJ3GEYJ101	M.RESISTOR CH 1/16W 100	1	
R8568	ERJ3GEYJ105	M.RESISTOR CH 1/16W 1M	1	
R8569	ERJ3GEYJ333	M.RESISTOR CH 1/16W 33K	1	
R8570	ERJ3GEYJ104	M.RESISTOR CH 1/16W 100K	1	
R8571	ERJ3GEYJ823	M.RESISTOR CH 1/16W 82K	1	
R8572	ERJ3GEYJ333	M.RESISTOR CH 1/16W 33K	1	
R8573	ERJ3GEYJ122	M.RESISTOR CH 1/16W 1.2K	1	
R8574	VRE0034E101	M.RESISTOR CH 1/10W 100	1	
R8575	VRE0034E391	M.RESISTOR CH 1/10W 390	1	
R8576	VRE0034E103	M.RESISTOR CH 1/10W 10K	1	
R8577	VRE0034E183	M.RESISTOR CH 1/10W 18K	1	
R8578	VRE0034E821	M.RESISTOR CH 1/10W 820	1	
R8579	VRE0034E512	M.RESISTOR CH 1/10W 5.1K	1	
R8580	VRE0034E681	M.RESISTOR CH 1/10W 680	1	
R8581	ERJ3GEYJ333	M.RESISTOR CH 1/16W 33K	1	
R8582,83	VRE0034E622	M.RESISTOR CH 1/10W 6.2K	2	
R8584,85	VRE0034E822	M.RESISTOR CH 1/10W 8.2K	2	
R8586	ERJ3GEYJ101	M.RESISTOR CH 1/16W 100	1	
R8587,88	ERJ3GEYJ102	M.RESISTOR CH 1/16W 1K	2	
R8589	ERJ3GEYJ101	M.RESISTOR CH 1/16W 100	1	
R8590	ERJ3GEYJ102	M.RESISTOR CH 1/16W 1K	1	
R8591,92	ERJ3GEYJ332	M.RESISTOR CH 1/16W 3.3K	2	
R8593	ERJ3GEYJ101	M.RESISTOR CH 1/16W 100	1	
R8594,95	ERJ3GEYJ473	M.RESISTOR CH 1/16W 47K	2	
R8596	ERJ3GEYJ223	M.RESISTOR CH 1/16W 22K	1	
R8597	ERJ3GEYJ183	M.RESISTOR CH 1/16W 18K	1	
R8598	ERJ3GEYJ473	M.RESISTOR CH 1/16W 47K	1	
R8599	ERJ3GEYJ102	M.RESISTOR CH 1/16W 1K	1	
R8600	ERJ3GEYJ105	M.RESISTOR CH 1/16W 1M	1	
R8601	ERJ3GEYJ273	M.RESISTOR CH 1/16W 27K	1	
R8602	ERJ3GEYJ823	M.RESISTOR CH 1/16W 82K	1	
R8603	ERJ3GEYJ333	M.RESISTOR CH 1/16W 33K	1	
R8604	ERJ3GEYJ821	M.RESISTOR CH 1/16W 820	1	
R8605	ERJ3GEYJ152	M.RESISTOR CH 1/16W 1.5K	1	
R8606	ERJ3GEYJ102	M.RESISTOR CH 1/16W 1K	1	
R8607	ERJ3GEYJ103	M.RESISTOR CH 1/16W 10K	1	
R8608	ERJ3GEYJ222	M.RESISTOR CH 1/16W 2.2K	1	
R8610,11	ERJ3GEYJ101	M.RESISTOR CH 1/16W 100	2	
R8613	ERJ3GEYJ101	M.RESISTOR CH 1/16W 100	1	
R8616,17	ERJ3GEYJ101	M.RESISTOR CH 1/16W 100	2	
R8619-29	ERJ3GEYJ102	M.RESISTOR CH 1/16W 1K	11	
R8630	ERJ3GEYJ103	M.RESISTOR CH 1/16W 10K	1	
R8631	ERJ3GEYJ102	M.RESISTOR CH 1/16W 1K	1	
R8632	ERJ3GEYJ100	M.RESISTOR CH 1/16W 10	1	
R8633	ERJ3GEYJ102	M.RESISTOR CH 1/16W 1K	1	
R8634	ERJ3GEYJ681	M.RESISTOR CH 1/16W 680	1	
R8635	ERJ3GEYJ101	M.RESISTOR CH 1/16W 100	1	
R8636	ERJ3GEYJ332	M.RESISTOR CH 1/16W 3.3K	1	
R8637,38	ERJ3GEYJ562	M.RESISTOR CH 1/16W 5.6K	2	
R8639	ERJ3GEYJ101	M.RESISTOR CH 1/16W 100	1	
R8640,41	ERJ3GEYJ103	M.RESISTOR CH 1/16W 10K	2	

Ref.No.		Part No.	Part Name & Description	Pcs	Remarks
R8642		ERJ3GEYJ273	M.RESISTOR CH 1/16W 27K	1	
R8643		ERJ3GEYJ102	M.RESISTOR CH 1/16W 1K	1	
R8644		ERJ3GEYJ333	M.RESISTOR CH 1/16W 33K	1	
R8645		ERJ3GEYJ184	M.RESISTOR CH 1/16W 180K	1	
R8646,47		ERJ3GEYJ222	M.RESISTOR CH 1/16W 2.2K	2	
R8648		ERJ3GEYJ560	M.RESISTOR CH 1/16W 56	1	
R8649		ERJ3GEYJ104	M.RESISTOR CH 1/16W 100K	1	
R8650		ERJ3GEYJ684	M.RESISTOR CH 1/16W 680K	1	
R8651		ERJ3GEYJ103	M.RESISTOR CH 1/16W 10K	1	
R8652,53		ERJ3GEYJ822	M.RESISTOR CH 1/16W 8.2K	2	
R8654,55		ERJ3GEYJ221	M.RESISTOR CH 1/16W 220	2	
R8656		ERJ3GEYJ332	M.RESISTOR CH 1/16W 3.3K	1	
R8657		ERJ3GEYJ102	M.RESISTOR CH 1/16W 1K	1	
R8658-60		ERJ3GEYJ222	M.RESISTOR CH 1/16W 2.2K	3	
R8662,63		ERJ3GEYJ102	M.RESISTOR CH 1/16W 1K	2	
R8680-88		ERJ3GEYJ221	M.RESISTOR CH 1/16W 220	9	
R8750		ERJ3GEYJ103	M.RESISTOR CH 1/16W 10K	1	
R8751-54		ERJ3GEYJ101	M.RESISTOR CH 1/16W 100	4	
R8755		ERJ3GEYJ103	M.RESISTOR CH 1/16W 10K	1	
R8756-60		ERJ3GEYJ102	M.RESISTOR CH 1/16W 1K	5	
R8761-64		ERJ3GEYJ101	M.RESISTOR CH 1/16W 100	4	
R8770-94		ERJ6GEY0R00	M.RESISTOR CH 1/10W 0	25	
R8795		ERJ3GEYJ102	M.RESISTOR CH 1/16W 1K	1	
R8797		ERJ6GEY0R00	M.RESISTOR CH 1/10W 0	1	
R8799		ERJ6GEY0R00	M.RESISTOR CH 1/10W 0	1	
R8801		ERJ3GEYJ101	M.RESISTOR CH 1/16W 100	1	
R8803-09		ERJ3GEYJ103	M.RESISTOR CH 1/16W 10K	7	
R8810		ERJ3GEYJ102	M.RESISTOR CH 1/16W 1K	1	
R8811-16		ERJ3GEYJ101	M.RESISTOR CH 1/16W 100	6	
R8817,18		ERJ3GEYJ102	M.RESISTOR CH 1/16W 1K	2	
R8819		ERJ3GEYJ101	M.RESISTOR CH 1/16W 100	1	
R8820		ERJ3GEYJ103	M.RESISTOR CH 1/16W 10K	1	
R8821		ERJ3GEYJ105	M.RESISTOR CH 1/16W 1M	1	
R8822		ERJ3GEYJ101	M.RESISTOR CH 1/16W 100	1	
R8823		ERJ3GEYJ103	M.RESISTOR CH 1/16W 10K	1	
R8824		ERJ3GEYJ102	M.RESISTOR CH 1/16W 1K	1	
R8825,26		ERJ3GEYJ332	M.RESISTOR CH 1/16W 3.3K	2	
R8827-34		ERJ3GEYJ103	M.RESISTOR CH 1/16W 10K	8	
R8835-40		ERJ3GEYJ101	M.RESISTOR CH 1/16W 100	6	
R8841,42		ERJ3GEYJ102	M.RESISTOR CH 1/16W 1K	2	
R8843		ERJ3GEYJ103	M.RESISTOR CH 1/16W 10K	1	
R8844		ERJ3GEYJ105	M.RESISTOR CH 1/16W 1M	1	
R8845		ERJ3GEYJ101	M.RESISTOR CH 1/16W 100	1	
R8846		ERJ3GEYJ103	M.RESISTOR CH 1/16W 10K	1	
R8847		ERJ3GEYJ102	M.RESISTOR CH 1/16W 1K	1	
R8848		ERJ3GEYJ101	M.RESISTOR CH 1/16W 100	1	
R8849,50		ERJ3GEYJ332	M.RESISTOR CH 1/16W 3.3K	2	
R8851,52		ERJ3GEYJ101	M.RESISTOR CH 1/16W 100	2	
R8853		ERJ3GEYJ102	M.RESISTOR CH 1/16W 1K	1	
R8855		ERJ3GEYJ102	M.RESISTOR CH 1/16W 1K	1	
R8857		ERJ3GEYJ101	M.RESISTOR CH 1/16W 100	1	
R8859		ERJ3GEYJ102	M.RESISTOR CH 1/16W 1K	1	
R8861		ERJ3GEYJ101	M.RESISTOR CH 1/16W 100	1	
R8862-67		ERJ3GEYJ471	M.RESISTOR CH 1/16W 470	6	
R8868		ERJ3GEYJ103	M.RESISTOR CH 1/16W 10K	1	
R8869		ERJ3GEYJ334	M.RESISTOR CH 1/16W 330K	1	
R8871		ERJ3GEYJ334	M.RESISTOR CH 1/16W 330K	1	
R8872-75		ERJ3GEYJ103	M.RESISTOR CH 1/16W 10K	4	
R8876		ERJ3GEYJ824	M.RESISTOR CH 1/16W 820K	1	
R8877-79		ERJ3GEYJ103	M.RESISTOR CH 1/16W 10K	3	
R8880-82		ERJ3GEYJ101	M.RESISTOR CH 1/16W 100	3	
R8883-85		ERJ3GEYJ102	M.RESISTOR CH 1/16W 1K	3	
R8886		ERJ3GEYJ562	M.RESISTOR CH 1/16W 5.6K	1	
R8887,88		ERJ3GEYJ392	M.RESISTOR CH 1/16W 3.9K	2	
R8889-91		ERJ3GEYJ152	M.RESISTOR CH 1/16W 1.5K	3	
R8892		ERJ3GEYJ102	M.RESISTOR CH 1/16W 1K	1	
R8893		ERJ3GEYJ101	M.RESISTOR CH 1/16W 100	1	
R8894		ERJ3GEYJ102	M.RESISTOR CH 1/16W 1K	1	
R8896-06		ERJ3GEYJ103	M.RESISTOR CH 1/16W 10K	11	
R8908-11		ERJ3GEYJ102	M.RESISTOR CH 1/16W 1K	4	
R8912		ERJ3GEYJ101	M.RESISTOR CH 1/16W 100	1	
R8913-15		ERJ3GEYJ103	M.RESISTOR CH 1/16W 10K	3	
R8916		ERJ3GEYJ101	M.RESISTOR CH 1/16W 100	1	
R8917		ERJ3GEY0R00	M.RESISTOR CH 1/16W 0	1	
R8919		ERJ3GEY0R00	M.RESISTOR CH 1/16W 0	1	

Ref.No.		Part No.	Part Name & Description	Pcs	Remarks
R8921		ERJ3GEY0R00	M.RESISTOR CH 1/16W 0	1	
R8923		ERJ3GEYJ103	M.RESISTOR CH 1/16W 10K	1	
R8924		ERJ3GEYJ101	M.RESISTOR CH 1/16W 100	1	
R8925-32		ERJ3GEYJ103	M.RESISTOR CH 1/16W 10K	8	
R8933		ERJ3GEYJ101	M.RESISTOR CH 1/16W 100	1	
R8934-36		ERJ3GEYJ103	M.RESISTOR CH 1/16W 10K	3	
R8937-39		ERJ3GEYJ101	M.RESISTOR CH 1/16W 100	3	
R8940,41		ERJ3GEYJ103	M.RESISTOR CH 1/16W 10K	2	
R8943		ERJ3GEYJ103	M.RESISTOR CH 1/16W 10K	1	
R8945		ERJ3GEYJ103	M.RESISTOR CH 1/16W 10K	1	
R8947,48		ERJ3GEYJ472	M.RESISTOR CH 1/16W 4.7K	2	
R8949-52		ERJ3GEYJ101	M.RESISTOR CH 1/16W 100	4	
R8953		ERJ3GEYJ223	M.RESISTOR CH 1/16W 22K	1	
R8954,55		ERJ3GEYJ823	M.RESISTOR CH 1/16W 82K	2	
R8956		ERJ3GEYJ183	M.RESISTOR CH 1/16W 18K	1	
R8957		ERJ3GEYJ823	M.RESISTOR CH 1/16W 82K	1	
R8958		ERJ3GEYJ101	M.RESISTOR CH 1/16W 100	1	
R8959		ERJ3GEYJ123	M.RESISTOR CH 1/16W 12K	1	
R8960		ERJ3GEYJ152	M.RESISTOR CH 1/16W 1.5K	1	
R8961		ERJ3GEYJ393	M.RESISTOR CH 1/16W 39K	1	
R8962		ERJ3GEYJ103	M.RESISTOR CH 1/16W 10K	1	
R8963,64		ERJ3GEYJ101	M.RESISTOR CH 1/16W 100	2	
R8965-69		ERJ3GEYJ103	M.RESISTOR CH 1/16W 10K	5	
R8970		ERJ3GEYJ102	M.RESISTOR CH 1/16W 1K	1	
R8971		ERJ3GEYJ103	M.RESISTOR CH 1/16W 10K	1	
R8972		ERJ3GEYJ511	M.RESISTOR CH 3W 510	1	
R8973		ERJ3GEYJ222	M.RESISTOR CH 1/16W 2.2K	1	
R8974		ERJ3GEYJ511	M.RESISTOR CH 3W 510	1	
R8975		ERJ3GEYJ222	M.RESISTOR CH 1/16W 2.2K	1	
R8976,77		ERJ3GEYJ103	M.RESISTOR CH 1/16W 10K	2	
R8978-96		ERJ6GEY0R00	M.RESISTOR CH 1/10W 0	19	
R8997-99		ERJ3GEYJ103	M.RESISTOR CH 1/16W 10K	3	
SW8001,02		VSS0367-08B	SWITCH	2	
SW8003,04		VSS0367-04B	SWITCH	2	
SW8801,02		VSS0367-08B	SWITCH	2	
SW8805,06		VSS0367-06B	SWITCH	2	
TP8001-04		VJR0548	PIN	4	
TP8004,05		VJR0548	PIN	2	
TP8005,06		VJR0548	PIN	2	
TP8006,07		VJR0548	PIN	2	
TP8007,08		VJR0548	PIN	2	
TP8008,09		VJR0548	PIN	2	
TP8009,10		VJR0548	PIN	2	
TP8010,11		VJR0548	PIN	2	
TP8011,12		VJR0548	PIN	2	
TP8012-16		VJR0548	PIN	5	
TP8016,17		VJR0548	PIN	2	
TP8017,18		VJR0548	PIN	2	
TP8018,19		VJR0548	PIN	2	
TP8019,20		VJR0548	PIN	2	
TP8020,21		VJR0548	PIN	2	
TP8021-32		VJR0548	PIN	12	
TP8040-42		VJR0548	PIN	3	
TP8300-03		VJR0548	PIN	4	
TP8303,04		VJR0548	PIN	2	
TP8304,05		VJR0548	PIN	2	
TP8305,06		VJR0548	PIN	2	
TP8306,07		VJR0548	PIN	2	
TP8307,08		VJR0548	PIN	2	
TP8312-16		VJR0548	PIN	5	
TP8320-25		VJR0548	PIN	6	
TP8325-28		VJR0548	PIN	4	
TP8330-32		VJR0548	PIN	3	
TP8350-53		VJR0548	PIN	4	
TP8360-63		VJR0548	PIN	4	
TP8524		VJR0548	PIN	1	
TP8526		VJR0548	PIN	1	
TP8531		VJR0646	TEST POINT	1	
TP8538,39		VJR0646	TEST POINT	2	

Ref.No.		Part No.	Part Name & Description	Pcs	Remarks
TP8540		VJR0548	PIN	1	
TP8541-43		VJR0646	TEST POINT	3	
TP8547		VJR0646	TEST POINT	1	
TP8551		VJR0548	PIN	1	
TP8552		VJR0646	TEST POINT	1	
TP8801-03		VJR0646	TEST POINT	3	
TP8806-08		VJR0646	TEST POINT	3	
TP8812-17		VJR0646	TEST POINT	6	
TP8818-21		VJR0548	PIN	4	
TP8822-26		VJR0646	TEST POINT	5	
TP8827,28		VJR0548	PIN	2	
TP8829-34		VJR0646	TEST POINT	6	
TP8835-39		VJR0548	PIN	5	
TP8840		VJR0646	TEST POINT	1	
TP8841-45		VJR0548	PIN	5	
TP8846,47		VJR0646	TEST POINT	2	
TPG8001		VJR0548	PIN	1	
TPG8001		VJR0548	PIN	1	
TPG8001		VJR0646	TEST POINT	1	
TPG8002		VJR0548	PIN	1	
TPG8002		VJR0548	PIN	1	
TPG8002		VJR0646	TEST POINT	1	
TPG8003		VJR0548	PIN	1	
TPG8003		VJR0548	PIN	1	
TPG8003		VJR0646	TEST POINT	1	
TPG8004		VJR0548	PIN	1	
TPG8005		VJR0646	TEST POINT	1	
TPG8550		VJR0646	TEST POINT	1	
VC8500		ECV1ZW20X53T	V.CAPACITOR 20P	1	
VR8500		VRV0064B203	V.RESISTOR 20K	1	
VR8501,02		VRV0064B502	V.RESISTOR 5K	2	
VR8805		VRV0109B103	V.RESISTOR 10K	1	
VR8806		VRV0109B502	V.RESISTOR 5K	1	
X8008		VSX0467	CRYSTAL OSCILLATOR	1	
X8500		VSX0556	CRYSTAL OSCILLATOR	1	
X8501		VSX0363	CRYSTAL OSCILLATOR	1	
X8804,05		VSX0392	IC	2	
X8838		VSX0450	IC	1	
X8839		VSX0392	IC	1	
X8840		VSX0391	IC	1	
			MISCELLANEOUS		
		VMB1498	CARD PULLER PIN	2	
		VML1655	LEVER. ARM.	2	
		VXA5039	P.C.BOARD SHIELD PLATE	1	
		XYN3+K6RS	SCREW	10	
		VMS4925	PIN	2	
		VMX2020	SPACER	3	
		XTV3+6FFR	SCREW	7	

S0 DRIVE VEP82092A

Ref.No.		Part No.	Part Name & Description	Pcs	Remarks
S0	■	VEP82092A	P.C.BOARD W/COMPONENT		
			DRIVE		
			CAPACITORS		
C2001-03		ECA1HXS010	E.CAPACITOR 50V 1U	3	
C2004		ECA1AXS680	E.CAPACITOR 10V 68U	1	
C2005,06		ECA1HXS010	E.CAPACITOR 50V 1U	2	
C2007		ECA1HXLV101X	E.CAPACITOR 50V 100P	1	
C2008		ECUM1H103ZFN	C.CAPACITOR CH 50V 0.01U	1	
C2009-11		ECUM1H333KBN	C.CAPACITOR CH 50V 0.033U	3	
C2012,13		ECUM1E104KBN	C.CAPACITOR 25V 0.1U	2	
C2014		ECUM1H681JCN	C.CAPACITOR CH 50V 680P	1	
C2016		ECUM1H102KBN	C.CAPACITOR CH 50V 1000P	1	
C2051-53		ECA1HXS4R7	E.CAPACITOR 50V 4.7U	3	
C2054		ECA1AXS680	E.CAPACITOR 10V 68U	1	
C2055,56		ECA1HXS010	E.CAPACITOR 50V 1U	2	
C2057		ECA1HXLV101X	E.CAPACITOR 50V 100P	1	
C2058		ECUM1H103ZFN	C.CAPACITOR CH 50V 0.01U	1	
C2059-61		ECUM1H333KBN	C.CAPACITOR CH 50V 0.033U	3	
C2062,63		ECUM1E104KBN	C.CAPACITOR 25V 0.1U	2	
C2064		ECUM1H681JCN	C.CAPACITOR CH 50V 680P	1	
C2065		ECUM1H103ZFN	C.CAPACITOR CH 50V 0.01U	1	
C2066		ECUM1H102KBN	C.CAPACITOR CH 50V 1000P	1	
C2101-03		ECA1HXS4R7	E.CAPACITOR 50V 4.7U	3	
C2104		ECA1AXS680	E.CAPACITOR 10V 68U	1	
C2105,06		ECA1HXS010	E.CAPACITOR 50V 1U	2	
C2107		ECA1HXLV101X	E.CAPACITOR 50V 100P	1	
C2108		ECUM1H103ZFN	C.CAPACITOR CH 50V 0.01U	1	
C2109-11		ECUM1H333KBN	C.CAPACITOR CH 50V 0.033U	3	
C2112,13		ECUM1E104KBN	C.CAPACITOR 25V 0.1U	2	
C2114		ECUM1H681JCN	C.CAPACITOR CH 50V 680P	1	
C2115		ECUM1H103ZFN	C.CAPACITOR CH 50V 0.01U	1	
C2116		ECUM1H102KBN	C.CAPACITOR CH 50V 1000P	1	
C2151-53		ECA1HXS4R7	E.CAPACITOR 50V 4.7U	3	
C2154		ECA1AXS680	E.CAPACITOR 10V 68U	1	
C2155,56		ECA1HXS010	E.CAPACITOR 50V 1U	2	
C2157		ECA1HXLV101X	E.CAPACITOR 50V 100P	1	
C2158		ECUM1H103ZFN	C.CAPACITOR CH 50V 0.01U	1	
C2159-61		ECUM1H333KBN	C.CAPACITOR CH 50V 0.033U	3	
C2162,63		ECUM1E104KBN	C.CAPACITOR 25V 0.1U	2	
C2164		ECUM1H681JCN	C.CAPACITOR CH 50V 680P	1	
C2166		ECUM1H102KBN	C.CAPACITOR CH 50V 1000P	1	
C2201-05		ECEV1HNR22	E.CAPACITOR 50V 0.22U	5	
C2206-09		ECUM1H103ZFN	C.CAPACITOR CH 50V 0.01U	4	
C2230,31		ECA1HXKN2R2	E.CAPACITOR 50V 2.2U	2	
C2232		ECA1HXLV470X	E.CAPACITOR 50V 47P	1	
C2233,34		ECUM1H103ZFN	C.CAPACITOR CH 50V 0.01U	2	
C2251		ECA1HXKN2R2	E.CAPACITOR 50V 2.2U	1	
C2281		ECA1CXS470	E.CAPACITOR 16V 47U	1	
C2282,83		ECA1HXLV101X	E.CAPACITOR 50V 100P	2	
C2284		ECA1HXLV470X	E.CAPACITOR 50V 47P	1	
C2285		ECA1HXLV101X	E.CAPACITOR 50V 100P	1	
C2286		ECA1CXS470	E.CAPACITOR 16V 47U	1	
C2290-97		ECUM1H103ZFN	C.CAPACITOR CH 50V 0.01U	8	
C2301		ECA1AXS680	E.CAPACITOR 10V 68U	1	
C2302		ECQB1H104JF	P.CAPACITOR 50V 0.1U	1	
C2303-29		ECUM1H103ZFN	C.CAPACITOR CH 50V 0.01U	27	
C2401-20		ECUM1H103ZFN	C.CAPACITOR CH 50V 0.01U	20	
C2501		ECA1HXLV470X	E.CAPACITOR 50V 47P	1	
C2502		ECUM1H103ZFN	C.CAPACITOR CH 50V 0.01U	1	
C2503		ECQB1H224JF	P.CAPACITOR 50V 0.22U	1	
C2504,05		ECUM1H103ZFN	C.CAPACITOR CH 50V 0.01U	2	
C2506,07		ECUM1H223KBN	C.CAPACITOR CH 50V 0.022U	2	
C2508-10		ECUM1H103ZFN	C.CAPACITOR CH 50V 0.01U	3	
D2001		MA151WK	DIODE	1	
D2002-07		10E1	DIODE	6	

Ref.No.		Part No.	Part Name & Description	Pcs	Remarks
D2008-11		MA151K	DIODE	4	
D2012		31DQ06	DIODE	1	
D2013		MA151K	DIODE	1	
D2051		MA151WK	DIODE	1	
D2052-57		10E1	DIODE	6	
D2058-61		MA151K	DIODE	4	
D2062		31DQ06	DIODE	1	
D2063		MA151K	DIODE	1	
D2101		MA151WK	DIODE	1	
D2102-07		10E1	DIODE	6	
D2108-11		MA151K	DIODE	4	
D2112		31DQ06	DIODE	1	
D2113		MA151K	DIODE	1	
D2151		MA151WK	DIODE	1	
D2152-57		10E1	DIODE	6	
D2158-61		MA151K	DIODE	4	
D2162		31DQ06	DIODE	1	
D2163		MA151K	DIODE	1	
D2230		MA153	DIODE	1	
D2251		MA3100-M	DIODE	1	
D2601-04		MA153	DIODE	4	
FL2301		VLF0576	FILTER	1	
IC2001		AN3891FBP	IC	1	
IC2002		NJM4558M	IC	1	
IC2003		MC14053BF	IC	1	(R)
IC2004		NJM2903M	IC	1	
IC2051		STA322A	TRANSISTOR	1	
IC2052		STA311A	TRANSISTOR	1	
IC2053		AN3891FBP	IC	1	
IC2101		AN3891FBP	IC	1	
IC2102		NJM4558M	IC	1	
IC2103		MC14053BF	IC	1	(R)
IC2104		NJM2903M	IC	1	
IC2151		AN3891FBP	IC	1	
IC2201-03		PU4124	IC	3	
IC2204-06		MC14538BF	IC	3	
IC2207,08		MC14081BF	IC	2	
IC2209,10		MC14050BF	IC	2	
IC2231		BA6238AU2M	IC	1	
IC2232		NJM2904M	IC	1	
IC2251		BA6238AU2M	IC	1	
IC2281,82		AN7805F	IC	2	
IC2301		MC74HC27F	IC	1	
IC2302		MC74HC175F	IC	1	
IC2303		MC74HC164F	IC	1	
IC2304		MC74HC04AF	IC	1	
IC2305-07		MC14094BF	IC	3	
IC2308		MC14050BF	IC	1	
IC2309-12		MC14021BF	IC	4	
IC2313		NJM2901M	IC	1	
IC2501		NJM78L12UA	IC	1	
IC2502		AN7815	IC	1	
IC2503		AN6609NS	IC	1	
IC2505		MC74HC74AF	IC	1	
IC2508		NJM4558M	IC	1	
IC2510		NJM2903M	IC	1	
L2001		VLQ0497	COIL	1	
L2051		VLQ0497	COIL	1	
L2101		VLQ0497	COIL	1	
L2151		VLQ0497	COIL	1	
P2001,02		VJP3454B096	CONNECTOR (MALE)	2	

Ref.No.	Part No.	Part Name & Description	Pcs	Remarks
Q2001-03	2SA1567-Y	TRANSISTOR	3	
Q2004	2SA1309A-R	TRANSISTOR	1	
Q2005	2SB944-Q	TRANSISTOR	1	
Q2006-08	2SC4064-Y	TRANSISTOR	3	
Q2009-11	2SC1384-R	TRANSISTOR	3	
Q2012	2SC1847-R	TRANSISTOR	1	(Q,R)
Q2051	2SA1309A-R	TRANSISTOR	1	
Q2052	2SB944-Q	TRANSISTOR	1	
Q2053-55	2SC1384-R	TRANSISTOR	3	
Q2056	2SC1847-R	TRANSISTOR	1	(Q,R)
Q2101-03	2SA1488-CDE	TRANSISTOR	3	
Q2104	2SA1309A-R	TRANSISTOR	1	
Q2105	2SB944-Q	TRANSISTOR	1	
Q2106-08	2SC3851-CDE	TRANSISTOR	3	
Q2109-11	2SC1384-R	TRANSISTOR	3	
Q2112	2SC1847-R	TRANSISTOR	1	(Q,R)
Q2151-53	2SA1488-CDE	TRANSISTOR	3	
Q2154	2SA1309A-R	TRANSISTOR	1	
Q2155	2SB944-Q	TRANSISTOR	1	
Q2156-58	2SC3851-CDE	TRANSISTOR	3	
Q2159-61	2SC1384-R	TRANSISTOR	3	
Q2162	2SC1847-R	TRANSISTOR	1	(Q,R)
Q2230	2SB943-Q	TRANSISTOR	1	
Q2231	2SB1322A-QR	TRANSISTOR	1	
Q2251	UN2213	TRANSISTOR-RESISTOR	1	
Q2301	2SB710-R	TRANSISTOR CHIP	1	(R)
Q2302	2SD602-R	TRANSISTOR	1	
Q2303	UN2213	TRANSISTOR-RESISTOR	1	
Q2502-04	UN2213	TRANSISTOR-RESISTOR	3	
		RESISTORS		
R2001,02	ERJ6GEYJ101	M.RESISTOR CH 1/10W 100	2	
R2003	ERJ6GEYJ562	M.RESISTOR CH 1/10W 5.6K	1	
R2004	ERX2SJR33	M.RESISTOR 2W 0.33	1	
R2005	ERJ6GEYJ681	M.RESISTOR CH 1/10W 680	1	
R2006	ERJ6GEYJ151	M.RESISTOR CH 1/10W 150	1	
R2007	ERJ6GEYJ333	M.RESISTOR CH 1/10W 33K	1	
R2008	ERJ6GEYJ103	M.RESISTOR CH 1/10W 10K	1	
R2009	ERG2SJ330	M.RESISTOR 2W 33	1	
R2010	ERJ6GEYJ682	M.RESISTOR CH 1/10W 6.8K	1	
R2011	ERJ6GEYJ121	M.RESISTOR CH 1/10W 120	1	
R2012-14	ERJ14YJ680	M.RESISTOR 1/4W 68	3	
R2015	ERJ6GEYJ103	M.RESISTOR CH 1/10W 10K	1	
R2016	ERJ6GEYJ222	M.RESISTOR CH 1/10W 2.2K	1	
R2017	ERJ12YJ560	M.RESISTOR 1/2W 56	1	
R2018	ERJ6GEYJ123	M.RESISTOR CH 1/10W 12K	1	
R2019	ERJ6GEYJ222	M.RESISTOR CH 1/10W 2.2K	1	
R2020	ERJ6GEYJ561	M.RESISTOR CH 1/10W 560	1	
R2021	ERJ6GEYJ222	M.RESISTOR CH 1/10W 2.2K	1	
R2022	ERJ6GEYJ104	M.RESISTOR CH 1/10W 100K	1	
R2023-25	ERJ6GEYJ102	M.RESISTOR CH 1/10W 1K	3	
R2026	ERG2SJ271	M.RESISTOR 2W 270	1	
R2027	ERJ6GEYJ752	M.RESISTOR CH 1/10W 7.5K	1	
R2028	ERJ6GEYJ103	M.RESISTOR CH 1/10W 10K	1	
R2030	ERJ12YJ2R2	M.RESISTOR 1/2W 2.2	1	
R2031	ERJ6GEYJ102	M.RESISTOR CH 1/10W 1K	1	
R2032	ERJ12YJ471	M.RESISTOR 1/2W 470	1	
R2033,34	ERJ6GEYJ102	M.RESISTOR CH 1/10W 1K	2	
R2035	ERJ6GEYJ105	M.RESISTOR CH 1/10W 1M	1	
R2036,37	ERJ6GEYJ103	M.RESISTOR CH 1/10W 10K	2	
R2038	VRE0034E103	M.RESISTOR CH 1/10W 10K	1	
R2039	ERJ6GEYJ101	M.RESISTOR CH 1/10W 100	1	
R2040	ERJ6GEYJ472	M.RESISTOR CH 1/10W 4.7K	1	
R2041	VRE0034E103	M.RESISTOR CH 1/10W 10K	1	
R2051,52	ERJ6GEYJ331	M.RESISTOR CH 1/10W 330	2	
R2053	ERJ6GEYJ562	M.RESISTOR CH 1/10W 5.6K	1	
R2054	ERX2SJR33	M.RESISTOR 2W 0.33	1	
R2055	ERJ6GEYJ681	M.RESISTOR CH 1/10W 680	1	
R2056	ERJ6GEYJ151	M.RESISTOR CH 1/10W 150	1	
R2057	ERJ6GEYJ333	M.RESISTOR CH 1/10W 33K	1	
R2058	ERJ6GEYJ103	M.RESISTOR CH 1/10W 10K	1	
R2059	ERG2SJ330	M.RESISTOR 2W 33	1	

Ref.No.	Part No.	Part Name & Description	Pcs	Remarks
R2060	ERJ6GEYJ682	M.RESISTOR CH 1/10W 6.8K	1	
R2061	ERJ6GEYJ121	M.RESISTOR CH 1/10W 120	1	
R2062-64	ERJ14YJ680	M.RESISTOR 1/4W 68	3	
R2065	ERJ6GEYJ103	M.RESISTOR CH 1/10W 10K	1	
R2066	ERJ6GEYJ222	M.RESISTOR CH 1/10W 2.2K	1	
R2067	ERJ12YJ560	M.RESISTOR 1/2W 56	1	
R2068	ERJ6GEYJ123	M.RESISTOR CH 1/10W 12K	1	
R2069	ERJ6GEYJ222	M.RESISTOR CH 1/10W 2.2K	1	
R2070	ERJ6GEYJ561	M.RESISTOR CH 1/10W 560	1	
R2071	ERJ6GEYJ222	M.RESISTOR CH 1/10W 2.2K	1	
R2072	ERJ6GEYJ104	M.RESISTOR CH 1/10W 100K	1	
R2073-75	ERJ6GEYJ102	M.RESISTOR CH 1/10W 1K	3	
R2076	ERG2SJ271	M.RESISTOR 2W 270	1	
R2077	ERJ6GEYJ752	M.RESISTOR CH 1/10W 7.5K	1	
R2078	ERJ6GEYJ103	M.RESISTOR CH 1/10W 10K	1	
R2079	ERJ6GEYJ100	M.RESISTOR CH 1/10W 10	1	
R2080	ERJ12YJ2R2	M.RESISTOR 1/2W 2.2	1	
R2081	ERJ6GEYJ102	M.RESISTOR CH 1/10W 1K	1	
R2082	ERJ12YJ471	M.RESISTOR 1/2W 470	1	
R2083,84	ERJ6GEYJ102	M.RESISTOR CH 1/10W 1K	2	
R2085	ERJ6GEYJ105	M.RESISTOR CH 1/10W 1M	1	
R2086,87	ERJ6GEYJ103	M.RESISTOR CH 1/10W 10K	2	
R2088	VRE0034E103	M.RESISTOR CH 1/10W 10K	1	
R2089	ERJ6GEYJ101	M.RESISTOR CH 1/10W 100	1	
R2090	ERJ6GEYJ472	M.RESISTOR CH 1/10W 4.7K	1	
R2091	VRE0034E103	M.RESISTOR CH 1/10W 10K	1	
R2101,02	ERJ6GEYJ331	M.RESISTOR CH 1/10W 330	2	
R2103	ERJ6GEYJ562	M.RESISTOR CH 1/10W 5.6K	1	
R2104	ERX2SJR33	M.RESISTOR 2W 0.33	1	
R2105	ERJ6GEYJ681	M.RESISTOR CH 1/10W 680	1	
R2106	ERJ6GEYJ151	M.RESISTOR CH 1/10W 150	1	
R2107	ERJ6GEYJ333	M.RESISTOR CH 1/10W 33K	1	
R2108	ERJ6GEYJ103	M.RESISTOR CH 1/10W 10K	1	
R2109	ERG2SJ330	M.RESISTOR 2W 33	1	
R2110	ERJ6GEYJ682	M.RESISTOR CH 1/10W 6.8K	1	
R2111	ERJ6GEYJ121	M.RESISTOR CH 1/10W 120	1	
R2112-14	ERJ14YJ680	M.RESISTOR 1/4W 68	3	
R2115	ERJ6GEYJ103	M.RESISTOR CH 1/10W 10K	1	
R2116	ERJ6GEYJ222	M.RESISTOR CH 1/10W 2.2K	1	
R2117	ERJ12YJ560	M.RESISTOR 1/2W 56	1	
R2118	ERJ6GEYJ123	M.RESISTOR CH 1/10W 12K	1	
R2119	ERJ6GEYJ222	M.RESISTOR CH 1/10W 2.2K	1	
R2120	ERJ6GEYJ561	M.RESISTOR CH 1/10W 560	1	
R2121	ERJ6GEYJ222	M.RESISTOR CH 1/10W 2.2K	1	
R2122	ERJ6GEYJ104	M.RESISTOR CH 1/10W 100K	1	
R2123-25	ERJ6GEYJ102	M.RESISTOR CH 1/10W 1K	3	
R2126	ERG2SJ271	M.RESISTOR 2W 270	1	
R2127	ERJ6GEYJ752	M.RESISTOR CH 1/10W 7.5K	1	
R2128	ERJ6GEYJ103	M.RESISTOR CH 1/10W 10K	1	
R2129	ERJ6GEYJ100	M.RESISTOR CH 1/10W 10	1	
R2130	ERJ12YJ2R2	M.RESISTOR 1/2W 2.2	1	
R2131	ERJ6GEYJ102	M.RESISTOR CH 1/10W 1K	1	
R2132	ERJ12YJ471	M.RESISTOR 1/2W 470	1	
R2133,34	ERJ6GEYJ102	M.RESISTOR CH 1/10W 1K	2	
R2135	ERJ6GEYJ105	M.RESISTOR CH 1/10W 1M	1	
R2136,37	ERJ6GEYJ103	M.RESISTOR CH 1/10W 10K	2	
R2138	VRE0034E103	M.RESISTOR CH 1/10W 10K	1	
R2139	ERJ6GEYJ101	M.RESISTOR CH 1/10W 100	1	
R2140	ERJ6GEYJ472	M.RESISTOR CH 1/10W 4.7K	1	
R2141	VRE0034E103	M.RESISTOR CH 1/10W 10K	1	
R2151,52	ERJ6GEYJ331	M.RESISTOR CH 1/10W 330	2	
R2153	ERJ6GEYJ562	M.RESISTOR CH 1/10W 5.6K	1	
R2154	ERX2SJR33	M.RESISTOR 2W 0.33	1	
R2155	ERJ6GEYJ681	M.RESISTOR CH 1/10W 680	1	
R2156	ERJ6GEYJ151	M.RESISTOR CH 1/10W 150	1	
R2157	ERJ6GEYJ333	M.RESISTOR CH 1/10W 33K	1	
R2158	ERJ6GEYJ103	M.RESISTOR CH 1/10W 10K	1	
R2159	ERG2SJ330	M.RESISTOR 2W 33	1	
R2160	ERJ6GEYJ682	M.RESISTOR CH 1/10W 6.8K	1	
R2161	ERJ6GEYJ121	M.RESISTOR CH 1/10W 120	1	
R2162-64	ERJ14YJ680	M.RESISTOR 1/4W 68	3	
R2165	ERJ6GEYJ103	M.RESISTOR CH 1/10W 10K	1	
R2166	ERJ6GEYJ222	M.RESISTOR CH 1/10W 2.2K	1	
R2167	ERJ12YJ560	M.RESISTOR 1/2W 56	1	
R2168	ERJ6GEYJ123	M.RESISTOR CH 1/10W 12K	1	

Ref.No.		Part No.	Part Name & Description	Pcs	Remarks
R2169		ERJ6GEYJ222	M.RESISTOR CH 1/10W 2.2K	1	
R2170		ERJ6GEYJ561	M.RESISTOR CH 1/10W 560	1	
R2171		ERJ6GEYJ222	M.RESISTOR CH 1/10W 2.2K	1	
R2172		ERJ6GEYJ104	M.RESISTOR CH 1/10W 100K	1	
R2173-75		ERJ6GEYJ102	M.RESISTOR CH 1/10W 1K	3	
R2176		ERG2SJ271	M.RESISTOR 2W 270	1	
R2177		ERJ6GEYJ752	M.RESISTOR CH 1/10W 7.5K	1	
R2178		ERJ6GEYJ103	M.RESISTOR CH 1/10W 10K	1	
R2180		ERJ12YJ2R2	M.RESISTOR 1/2W 2.2	1	
R2181		ERJ6GEYJ102	M.RESISTOR CH 1/10W 1K	1	
R2182		ERJ12YJ471	M.RESISTOR 1/2W 470	1	
R2183,84		ERJ6GEYJ102	M.RESISTOR CH 1/10W 1K	2	
R2185		ERJ6GEYJ105	M.RESISTOR CH 1/10W 1M	1	
R2186,87		ERJ6GEYJ103	M.RESISTOR CH 1/10W 10K	2	
R2188		VRE0034E103	M.RESISTOR CH 1/10W 10K	1	
R2189		ERJ6GEYJ101	M.RESISTOR CH 1/10W 100	1	
R2190		ERJ6GEYJ472	M.RESISTOR CH 1/10W 4.7K	1	
R2191		VRE0034E103	M.RESISTOR CH 1/10W 10K	1	
R2201-09		ERJ6GEYJ681	M.RESISTOR CH 1/10W 680	9	
R2210		ERJ6GEYJ682	M.RESISTOR CH 1/10W 6.8K	1	
R2211-15		ERJ6GEYJ105	M.RESISTOR CH 1/10W 1M	5	
R2216-21		ERJ6GEYJ104	M.RESISTOR CH 1/10W 100K	6	
R2230		ERJ6GEYJ561	M.RESISTOR CH 1/10W 560	1	
R2231		ERG1SJ101	M.RESISTOR 1W 100	1	
R2232		ERJ6GEYJ183	M.RESISTOR CH 1/10W 18K	1	
R2233		ERJ6GEYJ392	M.RESISTOR CH 1/10W 3.9K	1	
R2234		VRE0034E183	M.RESISTOR CH 1/10W 18K	1	
R2235-37		ERJ6GEYJ103	M.RESISTOR CH 1/10W 10K	3	
R2238		VRE0034E103	M.RESISTOR CH 1/10W 10K	1	
R2239		ERJ6GEYJ103	M.RESISTOR CH 1/10W 10K	1	
R2240-42		ERJ6GEYJ104	M.RESISTOR CH 1/10W 100K	3	
R2243		ERJ6GEYJ561	M.RESISTOR CH 1/10W 560	1	
R2251		ERJ14YJ102	M.RESISTOR 1/4W 1K	1	
R2252-54		ERJ6GEYJ103	M.RESISTOR CH 1/10W 10K	3	
R2255,56		ERJ6GEYJ104	M.RESISTOR CH 1/10W 100K	2	
R2301		ERJ6GEYJ564	M.RESISTOR CH 1/10W 560K	1	
R2302		ERJ6GEYJ220	M.RESISTOR CH 1/10W 22	1	
R2303		ERJ6GEYJ564	M.RESISTOR CH 1/10W 560K	1	
R2304		ERJ6GEYJ474	M.RESISTOR CH 1/10W 470K	1	
R2305		ERJ6GEYJ103	M.RESISTOR CH 1/10W 10K	1	
R2306,07		ERJ6GEYJ222	M.RESISTOR CH 1/10W 2.2K	2	
R2308,09		ERJ6GEYJ333	M.RESISTOR CH 1/10W 33K	2	
R2310		ERJ6GEYJ104	M.RESISTOR CH 1/10W 100K	1	
R2311		ERJ6GEYJ332	M.RESISTOR CH 1/10W 3.3K	1	
R2312,13		ERJ6GEYJ103	M.RESISTOR CH 1/10W 10K	2	
R2314		ERJ6GEYJ222	M.RESISTOR CH 1/10W 2.2K	1	
R2315		ERJ6GEYJ105	M.RESISTOR CH 1/10W 1M	1	
R2316		ERJ6GEYJ103	M.RESISTOR CH 1/10W 10K	1	
R2317-38		ERJ6GEYJ393	M.RESISTOR CH 1/10W 39K	22	
R2339		ERJ6GEYJ474	M.RESISTOR CH 1/10W 470K	1	
R2340		ERJ6GEYJ103	M.RESISTOR CH 1/10W 10K	1	
R2341		ERJ6GEYJ223	M.RESISTOR CH 1/10W 22K	1	
R2342		ERJ6GEYJ103	M.RESISTOR CH 1/10W 10K	1	
R2501		VRE0034E562	M.RESISTOR CH 1/10W 5.6K	1	
R2502		VRE0034E104	M.RESISTOR CH 1/10W 100K	1	
R2503		VRE0034E332	M.RESISTOR CH 1/10W 3.3K	1	
R2504		VRE0034E113	M.RESISTOR CH 1/10W 11K	1	
R2506		VRE0034E153	M.RESISTOR CH 1/10W 15K	1	
R2507		VRE0034E123	M.RESISTOR CH 1/10W 12K	1	
R2508		VRE0034E822	M.RESISTOR CH 1/10W 8.2K	1	
R2509		VRE0034E113	M.RESISTOR CH 1/10W 11K	1	
R2510		VRE0034E822	M.RESISTOR CH 1/10W 8.2K	1	
R2511		ERX2SJR82	M.RESISTOR 2W 0.82	1	
R2512		ERJ6GEYJ272	M.RESISTOR CH 1/10W 2.7K	1	
R2513,14		ERJ6GEY0R00	M.RESISTOR CH 1/10W 0	2	
R2515		ERJ6GEYJ562	M.RESISTOR CH 1/10W 5.6K	1	
R2516,17		ERJ6GEYJ271	M.RESISTOR CH 1/10W 270	2	
R2518-20		ERJ6GEYJ103	M.RESISTOR CH 1/10W 10K	3	
R2521-23		ERJ6GEYJ104	M.RESISTOR CH 1/10W 100K	3	
TP2001		VJR0646	TEST POINT	1	
TP2005		VJR0646	TEST POINT	1	
TP2007,08		VJR0646	TEST POINT	2	

Ref.No.		Part No.	Part Name & Description	Pcs	Remarks
TP2051		VJR0646	TEST POINT	1	
TP2055		VJR0646	TEST POINT	1	
TP2057,58		VJR0646	TEST POINT	2	
TP2101		VJR0646	TEST POINT	1	
TP2105		VJR0646	TEST POINT	1	
TP2107,08		VJR0646	TEST POINT	2	
TP2151		VJR0646	TEST POINT	1	
TP2155		VJR0646	TEST POINT	1	
TP2157,58		VJR0646	TEST POINT	2	
TP2231		VJR0646	TEST POINT	1	
TP2251		VJR0646	TEST POINT	1	
TPG1,G2		VJR0646	TEST POINT	2	
			MISCELLANEOUS		
		VMB2318	CARD PULLER PIN	2	
		VML2143	LEVER. ARM.	1	
		VML2144	LEVER. ARM.	1	
		VSC3823	HEAT SINK	1	
		VSC3888	HEAT SINK	4	
		XNG3B	NUT	16	
		XYN3+F10S	SCREW	1	
		XWA3B	WASHER	8	
		XWG3	NUT	8	
		XYNV3+K6S	SCREW	16	
		XYN3+C6S	SCREW	2	
		XYN3+F14S	SCREW	7	

S1 EQ1 VEP85036B

Ref.No.		Part No.	Part Name & Description	Pcs	Remarks
S1	■	VEP85036B	P.C.BOARD W/COMPONENT		
			EQ1		
			CAPACITORS		
C5001,02		ECA1HXS2R2	E.CAPACITOR 50V 2.2U	2	
C5003,04		ECUX1H271JCV	C.CAPACITOR CH 50V 270P	2	
C5005-16		ECUX1C104ZFV	C.CAPACITOR CH 16V 0.1U	12	
C5017		ECUX1H270JCV	C.CAPACITOR 50V 27P	1	
C5018		ECUX1H103ZFV	C.CAPACITOR CH 50V 0.01U	1	
C5019,20		ECUX1C104ZFV	C.CAPACITOR CH 16V 0.1U	2	
C5021		ECUM1E104KBN	C.CAPACITOR 25V 0.1U	1	
C5023,24		ECUX1C104ZFV	C.CAPACITOR CH 16V 0.1U	2	
C5025		ECUX1H150JCV	C.CAPACITOR 50V 15P	1	
C5026,27		ECUX1C104ZFV	C.CAPACITOR CH 16V 0.1U	2	
C5028		ECUM1E104KBN	C.CAPACITOR 25V 0.1U	1	
C5030		VCMD058C027	M.CAPACITOR V	1	
C5032		VCMD059F047	M.CAPACITOR	1	
C5034		VCMD059F110	M.CAPACITOR	1	
C5036		VCMD060F300	M.CAPACITOR	1	
C5037,38		ECUX1C104ZFV	C.CAPACITOR CH 16V 0.1U	2	
C5039		ECUM1E104KBN	C.CAPACITOR 25V 0.1U	1	
C5042		ECUX1H101JCV	C.CAPACITOR CH 50V 100P	1	
C5043-49		ECUX1C104ZFV	C.CAPACITOR CH 16V 0.1U	7	
C5050		ECUM1E104KBN	C.CAPACITOR 25V 0.1U	1	
C5051-54		ECUX1C104ZFV	C.CAPACITOR CH 16V 0.1U	4	
C5056-59		ECUX1C104ZFV	C.CAPACITOR CH 16V 0.1U	4	
C5060		ECUX1H101JCV	C.CAPACITOR CH 50V 100P	1	
C5061		ECUX1C104ZFV	C.CAPACITOR CH 16V 0.1U	1	
C5062		ECUX1H020CCV	C.CAPACITOR 50V 2P	1	
C5063,64		ECUX1C104ZFV	C.CAPACITOR CH 16V 0.1U	2	
C5065		ECUX1H101JCV	C.CAPACITOR CH 50V 100P	1	
C5066		ECUX1H050CCV	C.CAPACITOR CH 50V 5P	1	
C5067-69		ECUX1C104ZFV	C.CAPACITOR CH 16V 0.1U	3	
C5071-75		ECUX1C104ZFV	C.CAPACITOR CH 16V 0.1U	5	
C5076,77		ECUM1E104KBN	C.CAPACITOR 25V 0.1U	2	
C5078		ECUX1H680JCV	C.CAPACITOR 50V 68P	1	
C5079-84		ECUX1C104ZFV	C.CAPACITOR CH 16V 0.1U	6	
C5085		ECUX1H150JCV	C.CAPACITOR 50V 15P	1	
C5086,87		ECUX1C104ZFV	C.CAPACITOR CH 16V 0.1U	2	
C5088		ECUM1E104KBN	C.CAPACITOR 25V 0.1U	1	
C5089,90		ECUX1C104ZFV	C.CAPACITOR CH 16V 0.1U	2	
C5091,92		ECUM1E104KBN	C.CAPACITOR 25V 0.1U	2	
C5093-00		ECUX1C104ZFV	C.CAPACITOR CH 16V 0.1U	8	
C5101		ECUM1E104KBN	C.CAPACITOR 25V 0.1U	1	
C5102		ECUX1H821JCV	C.CAPACITOR 50V 820P	1	
C5103-07		ECUX1C104ZFV	C.CAPACITOR CH 16V 0.1U	5	
C5108		ECUM1E104KBN	C.CAPACITOR 25V 0.1U	1	
C5109-11		ECUX1C104ZFV	C.CAPACITOR CH 16V 0.1U	3	
C5112-15		ECUM1E104KBN	C.CAPACITOR 25V 0.1U	4	
C5116-19		ECUX1C104ZFV	C.CAPACITOR CH 16V 0.1U	4	
C5120		ECUX1H102JV	C.CAPACITOR CH 50V 1000P	1	
C5121,22		ECUX1C104ZFV	C.CAPACITOR CH 16V 0.1U	2	
C5123		ECEA1CGE471	E.CAPACITOR 16V 470U	1	
C5124		ECUX1C104ZFV	C.CAPACITOR CH 16V 0.1U	1	
C5125		ECEA1CGE471	E.CAPACITOR 16V 470U	1	
C5126		ECUX1C104ZFV	C.CAPACITOR CH 16V 0.1U	1	
C5301,02		ECA1HXS2R2	E.CAPACITOR 50V 2.2U	2	
C5303,04		ECUX1H271JCV	C.CAPACITOR CH 50V 270P	2	
C5305-16		ECUX1C104ZFV	C.CAPACITOR CH 16V 0.1U	12	
C5317		ECUX1H270JCV	C.CAPACITOR 50V 27P	1	
C5318		ECUX1H103ZFV	C.CAPACITOR CH 50V 0.01U	1	
C5319,20		ECUX1C104ZFV	C.CAPACITOR CH 16V 0.1U	2	
C5321		ECUM1E104KBN	C.CAPACITOR 25V 0.1U	1	
C5323,24		ECUX1C104ZFV	C.CAPACITOR CH 16V 0.1U	2	
C5325		ECUX1H150JCV	C.CAPACITOR 50V 15P	1	
C5326,27		ECUX1C104ZFV	C.CAPACITOR CH 16V 0.1U	2	
C5328		ECUM1E104KBN	C.CAPACITOR 25V 0.1U	1	
C5330		VCMD058C027	M.CAPACITOR V	1	
C5332		VCMD059F047	M.CAPACITOR	1	

Ref.No.		Part No.	Part Name & Description	Pcs	Remarks
C5334		VCMD059F110	M.CAPACITOR	1	
C5336		VCMD060F300	M.CAPACITOR	1	
C5337,38		ECUX1C104ZFV	C.CAPACITOR CH 16V 0.1U	2	
C5339		ECUM1E104KBN	C.CAPACITOR 25V 0.1U	1	
C5342		ECUX1H101JCV	C.CAPACITOR CH 50V 100P	1	
C5343-49		ECUX1C104ZFV	C.CAPACITOR CH 16V 0.1U	7	
C5350		ECUM1E104KBN	C.CAPACITOR 25V 0.1U	1	
C5351-54		ECUX1C104ZFV	C.CAPACITOR CH 16V 0.1U	4	
C5356-59		ECUX1C104ZFV	C.CAPACITOR CH 16V 0.1U	4	
C5360		ECUX1H101JCV	C.CAPACITOR CH 50V 100P	1	
C5361		ECUX1C104ZFV	C.CAPACITOR CH 16V 0.1U	1	
C5362		ECUX1H020CCV	C.CAPACITOR 50V 2P	1	
C5363,64		ECUX1C104ZFV	C.CAPACITOR CH 16V 0.1U	2	
C5365		ECUX1H101JCV	C.CAPACITOR CH 50V 100P	1	
C5366		ECUX1H050CCV	C.CAPACITOR CH 50V 5P	1	
C5367-69		ECUX1C104ZFV	C.CAPACITOR CH 16V 0.1U	3	
C5371-75		ECUX1C104ZFV	C.CAPACITOR CH 16V 0.1U	5	
C5376,77		ECUM1E104KBN	C.CAPACITOR 25V 0.1U	2	
C5378		ECUX1H680JCV	C.CAPACITOR 50V 68P	1	
C5379-84		ECUX1C104ZFV	C.CAPACITOR CH 16V 0.1U	6	
C5385		ECUX1H150JCV	C.CAPACITOR 50V 15P	1	
C5386,87		ECUX1C104ZFV	C.CAPACITOR CH 16V 0.1U	2	
C5388		ECUM1E104KBN	C.CAPACITOR 25V 0.1U	1	
C5389,90		ECUX1C104ZFV	C.CAPACITOR CH 16V 0.1U	2	
C5391,92		ECUM1E104KBN	C.CAPACITOR 25V 0.1U	2	
C5393-00		ECUX1C104ZFV	C.CAPACITOR CH 16V 0.1U	8	
C5401		ECUM1E104KBN	C.CAPACITOR 25V 0.1U	1	
C5402		ECUX1C104ZFV	C.CAPACITOR CH 16V 0.1U	1	
C5403		ECUX1H821JCV	C.CAPACITOR 50V 820P	1	
C5404-07		ECUX1C104ZFV	C.CAPACITOR CH 16V 0.1U	4	
C5408		ECUM1E104KBN	C.CAPACITOR 25V 0.1U	1	
C5409-11		ECUX1C104ZFV	C.CAPACITOR CH 16V 0.1U	3	
C5412-15		ECUM1E104KBN	C.CAPACITOR 25V 0.1U	4	
C5416-19		ECUX1C104ZFV	C.CAPACITOR CH 16V 0.1U	4	
C5420		ECUX1H102JV	C.CAPACITOR CH 50V 1000P	1	
C5421,22		ECUX1C104ZFV	C.CAPACITOR CH 16V 0.1U	2	
C5423		ECEA1CGE471	E.CAPACITOR 16V 470U	1	
C5424		ECUX1C104ZFV	C.CAPACITOR CH 16V 0.1U	1	
C5425		ECEA1CGE471	E.CAPACITOR 16V 470U	1	
C5426		ECUX1C104ZFV	C.CAPACITOR CH 16V 0.1U	1	
C5601-05		ECUX1C104ZFV	C.CAPACITOR CH 16V 0.1U	5	
C5606,07		ECA1CXS100	E.CAPACITOR 16V 10U	2	
C5608		ECUM1E104KBN	C.CAPACITOR 25V 0.1U	1	
C5609-13		ECUX1C104ZFV	C.CAPACITOR CH 16V 0.1U	5	
C5614		ECUX1H220JCV	C.CAPACITOR CH 50V 22P	1	
C5615		ECUX1H820JCV	C.CAPACITOR CH 50V 82P	1	
C5617		ECA1CXS100	E.CAPACITOR 16V 10U	1	
C5618		ECUX1C104ZFV	C.CAPACITOR CH 16V 0.1U	1	
C5619		ECUX1H020CCV	C.CAPACITOR 50V 2P	1	
C5622		ECUX1C104ZFV	C.CAPACITOR CH 16V 0.1U	1	
C5623		ECUX1H100DCV	C.CAPACITOR 50V 10P	1	
C5624		ECUX1C104ZFV	C.CAPACITOR CH 16V 0.1U	1	
C5626-34		ECUX1C104ZFV	C.CAPACITOR CH 16V 0.1U	9	
C5635		ECUX1H221JCV	C.CAPACITOR CH 50V 220P	1	
C5636-38		ECUX1C104ZFV	C.CAPACITOR CH 16V 0.1U	3	
C5701-05		ECUX1C104ZFV	C.CAPACITOR CH 16V 0.1U	5	
C5706,07		ECA1CXS100	E.CAPACITOR 16V 10U	2	
C5708		ECUM1E104KBN	C.CAPACITOR 25V 0.1U	1	
C5709-13		ECUX1C104ZFV	C.CAPACITOR CH 16V 0.1U	5	
C5714		ECUX1H220JCV	C.CAPACITOR CH 50V 22P	1	
C5715		ECUX1H820JCV	C.CAPACITOR CH 50V 82P	1	
C5717		ECA1CXS100	E.CAPACITOR 16V 10U	1	
C5718		ECUX1C104ZFV	C.CAPACITOR CH 16V 0.1U	1	
C5719		ECUX1H020CCV	C.CAPACITOR 50V 2P	1	
C5722		ECUX1C104ZFV	C.CAPACITOR CH 16V 0.1U	1	
C5723		ECUX1H100DCV	C.CAPACITOR 50V 10P	1	
C5724		ECUX1C104ZFV	C.CAPACITOR CH 16V 0.1U	1	
C5726-34		ECUX1C104ZFV	C.CAPACITOR CH 16V 0.1U	9	
C5736-38		ECUX1C104ZFV	C.CAPACITOR CH 16V 0.1U	3	
C5801		ECUX1C104ZFV	C.CAPACITOR CH 16V 0.1U	1	
C5802,03		ECEA1CGE471	E.CAPACITOR 16V 470U	2	
C5804		ECUX1C104ZFV	C.CAPACITOR CH 16V 0.1U	1	
C5805		ECA1EXLV101X	E.CAPACITOR 25V 100P	1	
C5806,07		ECUX1C104ZFV	C.CAPACITOR CH 16V 0.1U	2	
C5808,09		ECEA1CGE471	E.CAPACITOR 16V 470U	2	

S1

Ref.No.	Part No.	Part Name & Description	Pcs	Remarks
C5810	ECUX1C104ZFV	C.CAPACITOR CH 16V 0.1U	1	
C5811	ECA1EXLV101X	E.CAPACITOR 25V 100P	1	
C5812	ECUX1C104ZFV	C.CAPACITOR CH 16V 0.1U	1	
C5813	ECUX1H103ZFV	C.CAPACITOR CH 50V 0.01U	1	
C5814,15	ECA1EXLV101X	E.CAPACITOR 25V 100P	2	
C5816	ECUX1H103ZFV	C.CAPACITOR CH 50V 0.01U	1	
C5817	ECA1EXLV101X	E.CAPACITOR 25V 100P	1	
C5818,19	ECUX1C104ZFV	C.CAPACITOR CH 16V 0.1U	2	
C5820,21	ECEA1CGE471	E.CAPACITOR 16V 470U	2	
C5822	ECUX1C104ZFV	C.CAPACITOR CH 16V 0.1U	1	
C5823	ECEA1CGE471	E.CAPACITOR 16V 470U	1	
C5824	ECUX1C104ZFV	C.CAPACITOR CH 16V 0.1U	1	
C5825	ECEA1CGE471	E.CAPACITOR 16V 470U	1	
C5826-66	ECUX1C104ZFV	C.CAPACITOR CH 16V 0.1U	41	
C5867	ECUX1H562KBV	C.CAPACITOR 50V 5600P	1	
C5868	ECUX1C104ZFV	C.CAPACITOR CH 16V 0.1U	1	
C5869	ECUX1H102JV	C.CAPACITOR CH 50V 1000P	1	
C5870-76	ECUX1C104ZFV	C.CAPACITOR CH 16V 0.1U	7	
C5877,78	ECUM1E104KBN	C.CAPACITOR 25V 0.1U	2	
C5879-85	ECUX1C104ZFV	C.CAPACITOR CH 16V 0.1U	7	
D5601	1SS154	DIODE	1	
D5602	MA157	DIODE	1	
D5603	FC54M-5	DIODE	1	
D5701	1SS154	DIODE	1	
D5702	MA157	DIODE	1	
D5703	FC54M-5	DIODE	1	
DL5001	VLD0254	DELAY	1	
DL5002,03	VLD0255	DELAY	2	
DL5301	VLD0254	DELAY	1	
DL5302,03	VLD0255	DELAY	2	
FL5801-04	VLF0931	COIL	4	
IC5001	UPC1663G	IC	1	
IC5002-05	MC1495M	IC	4	
IC5006	UPC1663G	IC	1	
IC5007	AD96687BR	IC	1	
IC5008	NJM1496M	IC	1	
IC5009	TL082CPS	IC	1	
IC5010	AN7805	IC	1	
IC5011	AN7905F	IC	1	
IC5301	UPC1663G	IC	1	
IC5302-05	MC1495M	IC	4	
IC5306	UPC1663G	IC	1	
IC5307	AD96687BR	IC	1	
IC5308	NJM1496M	IC	1	
IC5309	TL082CPS	IC	1	
IC5310	AN7805	IC	1	
IC5311	AN7905F	IC	1	
IC5601	MB10HL116PFF	IC	1	
IC5602	MB10HL107PFF	IC	1	
IC5603	MB10HL116PFF	IC	1	
IC5604	MB10HL107PFF	IC	1	
IC5605	MB10HL116PFF	IC	1	
IC5606	MB813AZ	IC	1	
IC5607	MB10HL116PFF	IC	1	
IC5608	VCR0354	IC	1	
IC5609	TL082CPS	IC	1	
IC5701	MB10HL116PFF	IC	1	
IC5702	MB10HL107PFF	IC	1	
IC5703	MB10HL116PFF	IC	1	
IC5704	MB10HL107PFF	IC	1	
IC5705	MB10HL116PFF	IC	1	
IC5706	MB813AZ	IC	1	
IC5707	MB10HL116PFF	IC	1	

Ref.No.	Part No.	Part Name & Description	Pcs	Remarks
IC5708	VCR0354	IC	1	
IC5709	TL082CPS	IC	1	
IC5801	AN78N05	IC	1	
IC5802	AN79N05	IC	1	
IC5803	NJM78L08UA	IC	1	
IC5804	LM337T	IC	1	
IC5805,06	MB88346BPFTF	IC	2	
IC5807-10	TL084CNS	IC	4	
IC5811-14	UPD5201G	IC	4	
IC5815	MC14538BF	IC	1	
IC5816,17	MC14015BF	IC	2	
IC5818	MC74HC157AF	IC	1	
IC5819	MC74HC86F	IC	1	
IC5820	MC74HC08AF	IC	1	
IC5821	MC74HC04AF	IC	1	
IC5822	MC14053BF	IC	1	(R)
IC5823	MC74HC04AF	IC	1	
IC5824	MC74HC86F	IC	1	
IC5825,26	MC14053BF	IC	2	(R)
L5001	VLQ0188K1R0N	COIL 1UH	1	
L5301	VLQ0188K1R0N	COIL 1UH	1	
L5601	VLQ0188KR56N	COIL 0.56UH	1	
L5701	VLQ0188KR56N	COIL 0.56UH	1	
L5801	VLQ0128	COIL 47UH	1	
P001,02	VJP3454B096	CONNECTOR (MALE)	2	
P5001	VJP1230G	CONNECTOR (MALE) 3P	1	
P5301	VJP1230R	CONNECTOR (MALE) 3P	1	
Q5001	XN6537	TRANSISTOR	1	
Q5002,03	2SA1022-C	TRANSISTOR CHIP	2	(C)
Q5004,05	2SC2295-C	TRANSISTOR CHIP	2	(C)
Q5006-08	XN6537	TRANSISTOR	3	
Q5009,10	2SK508	TRANSISTOR	2	
Q5011-13	2SC3130	TRANSISTOR	3	
Q5015	XN6537	TRANSISTOR	1	
Q5016-20	2SC3130	TRANSISTOR	5	
Q5021-23	XN6537	TRANSISTOR	3	
Q5024,25	2SC3130	TRANSISTOR	2	
Q5026,27	XN6537	TRANSISTOR	2	
Q5028	2SC3130	TRANSISTOR	1	
Q5029,30	XN6537	TRANSISTOR	2	
Q5301	XN6537	TRANSISTOR	1	
Q5302,03	2SA1022-C	TRANSISTOR CHIP	2	(C)
Q5304,05	2SC2295-C	TRANSISTOR CHIP	2	(C)
Q5306-08	XN6537	TRANSISTOR	3	
Q5309,10	2SK508	TRANSISTOR	2	
Q5311-13	2SC3130	TRANSISTOR	3	
Q5315	XN6537	TRANSISTOR	1	
Q5316-20	2SC3130	TRANSISTOR	5	
Q5321-23	XN6537	TRANSISTOR	3	
Q5324,25	2SC3130	TRANSISTOR	2	
Q5326,27	XN6537	TRANSISTOR	2	
Q5328	2SC3130	TRANSISTOR	1	
Q5329,30	XN6537	TRANSISTOR	2	
Q5604	2SA1022-C	TRANSISTOR CHIP	1	(C)
Q5801-04	2SD1938	TRANSISTOR	4	
		RESISTORS		
R5001,02	VRE0034E510	M.RESISTOR CH 1/10W 51	2	
R5003,04	ERJ3GEYJ470	M.RESISTOR CH 1/16W 47	2	
R5005	VRE0034E302	M.RESISTOR CH 1/10W 3K	1	
R5006	ERJ3GEYJ150	M.RESISTOR CH 1/16W 15	1	
R5007	VRE0034E302	M.RESISTOR CH 1/10W 3K	1	
R5008	ERJ3GEYJ150	M.RESISTOR CH 1/16W 15	1	
R5009	VRE0034E751	M.RESISTOR CH 1/10W 750	1	

Ref.No.	Part No.	Part Name & Description	Pcs	Remarks
R5010	VRE0034E911	M.RESISTOR CH 1/10W 910	1	
R5011	VRE0034E751	M.RESISTOR CH 1/10W 750	1	
R5012,13	VRE0034E361	M.RESISTOR CH 1/10W 360	2	
R5014,15	VRE0034E391	M.RESISTOR CH 1/10W 390	2	
R5016,17	ERJ3GEYJ470	M.RESISTOR CH 1/16W 47	2	
R5018	ERJ3GEYJ101	M.RESISTOR CH 1/16W 100	1	
R5019,20	ERJ3GEYJ331	M.RESISTOR CH 1/16W 330	2	
R5021,22	ERJ3GEYJ222	M.RESISTOR CH 1/16W 2.2K	2	
R5023,24	VRE0034E391	M.RESISTOR CH 1/10W 390	2	
R5025,26	ERJ3GEYJ470	M.RESISTOR CH 1/16W 47	2	
R5027,28	ERJ3GEYJ560	M.RESISTOR CH 1/16W 56	2	
R5029,30	ERJ6GEYJ182	M.RESISTOR CH 1/10W 1.8K	2	
R5031	VRE0034E471	M.RESISTOR CH 1/10W 470	1	
R5032	VRE0034E103	M.RESISTOR CH 1/10W 10K	1	
R5033	VRE0034E431	M.RESISTOR CH 1/10W 430	1	
R5034	VRE0034E271	M.RESISTOR CH 1/10W 270	1	
R5035	VRE0034E471	M.RESISTOR CH 1/10W 470	1	
R5036	VRE0034E103	M.RESISTOR CH 1/10W 10K	1	
R5037	VRE0034E431	M.RESISTOR CH 1/10W 430	1	
R5038,39	ERJ3GEYJ221	M.RESISTOR CH 1/16W 220	2	
R5040	ERJ3GEYJ470	M.RESISTOR CH 1/16W 47	1	
R5041	ERJ3GEYJ560	M.RESISTOR CH 1/16W 56	1	
R5042	ERJ6GEYJ152	M.RESISTOR CH 1/10W 1.5K	1	
R5043	ERJ3GEYJ472	M.RESISTOR CH 1/16W 4.7K	1	
R5044	VRE0034E121	M.RESISTOR CH 1/10W 120	1	
R5045	ERJ3GEYJ470	M.RESISTOR CH 1/16W 47	1	
R5048	ERJ3GEYJ101	M.RESISTOR CH 1/16W 100	1	
R5049	ERJ3GEYJ470	M.RESISTOR CH 1/16W 47	1	
R5050	ERJ3GEYJ821	M.RESISTOR CH 1/16W 820	1	
R5052	ERJ3GEYJ331	M.RESISTOR CH 1/16W 330	1	
R5053,54	ERJ3GEYJ101	M.RESISTOR CH 1/16W 100	2	
R5055	ERJ3GEYJ470	M.RESISTOR CH 1/16W 47	1	
R5056	ERJ3GEYJ560	M.RESISTOR CH 1/16W 56	1	
R5057	ERJ6GEYJ102	M.RESISTOR CH 1/10W 1K	1	
R5058,59	VRE0034E510	M.RESISTOR CH 1/10W 51	2	
R5060	ERJ3GEYJ470	M.RESISTOR CH 1/16W 47	1	
R5061	ERJ3GEYJ560	M.RESISTOR CH 1/16W 56	1	
R5062	ERJ6GEYJ102	M.RESISTOR CH 1/10W 1K	1	
R5063	ERJ3GEYJ472	M.RESISTOR CH 1/16W 4.7K	1	
R5064,65	VRE0034E510	M.RESISTOR CH 1/10W 51	2	
R5067,68	ERJ3GEYJ470	M.RESISTOR CH 1/16W 47	2	
R5069	ERJ3GEYJ391	M.RESISTOR CH 1/16W 390	1	
R5070	ERJ3GEYJ122	M.RESISTOR CH 1/16W 1.2K	1	
R5071	ERJ3GEYJ470	M.RESISTOR CH 1/16W 47	1	
R5072	ERJ3GEYJ331	M.RESISTOR CH 1/16W 330	1	
R5073	ERJ3GEYJ122	M.RESISTOR CH 1/16W 1.2K	1	
R5074	ERJ3GEYJ561	M.RESISTOR CH 1/16W 560	1	
R5075,76	ERJ3GEYJ222	M.RESISTOR CH 1/16W 2.2K	2	
R5077,78	ERJ3GEYJ391	M.RESISTOR CH 1/16W 390	2	
R5079	ERJ3GEYJ470	M.RESISTOR CH 1/16W 47	1	
R5080	ERJ3GEYJ560	M.RESISTOR CH 1/16W 56	1	
R5081	ERJ6GEYJ122	M.RESISTOR CH 1/10W 1.2K	1	
R5083	ERJ3GEYJ472	M.RESISTOR CH 1/16W 4.7K	1	
R5084	VRE0034E510	M.RESISTOR CH 1/10W 51	1	
R5085	VRE0034E130	M.RESISTOR CH 1/10W 13	1	
R5086	ERJ3GEYJ330	M.RESISTOR CH 1/16W 33	1	
R5087	ERJ3GEYJ560	M.RESISTOR CH 1/16W 56	1	
R5088	ERJ3GEYJ122	M.RESISTOR CH 1/16W 1.2K	1	
R5089	ERJ3GEYJ330	M.RESISTOR CH 1/16W 33	1	
R5090	ERJ3GEYJ560	M.RESISTOR CH 1/16W 56	1	
R5091	ERJ3GEYJ122	M.RESISTOR CH 1/16W 1.2K	1	
R5092	ERJ3GEYJ330	M.RESISTOR CH 1/16W 33	1	
R5093	ERJ3GEYJ560	M.RESISTOR CH 1/16W 56	1	
R5094	ERJ3GEYJ122	M.RESISTOR CH 1/16W 1.2K	1	
R5095	ERJ3GEYJ470	M.RESISTOR CH 1/16W 47	1	
R5096	ERJ3GEYJ560	M.RESISTOR CH 1/16W 56	1	
R5097	ERJ3GEYJ182	M.RESISTOR CH 1/16W 1.8K	1	
R5098,99	ERJ3GEYJ330	M.RESISTOR CH 1/16W 33	2	
R5100	ERJ3GEYJ102	M.RESISTOR CH 1/16W 1K	1	
R5101	ERJ3GEYJ392	M.RESISTOR CH 1/16W 3.9K	1	
R5102	ERJ3GEYJ561	M.RESISTOR CH 1/16W 560	1	
R5103	ERJ3GEYJ122	M.RESISTOR CH 1/16W 1.2K	1	
R5104	ERJ3GEYJ331	M.RESISTOR CH 1/16W 330	1	
R5105	ERJ3GEYJ122	M.RESISTOR CH 1/16W 1.2K	1	
R5106	ERJ3GEYJ561	M.RESISTOR CH 1/16W 560	1	

Ref.No.	Part No.	Part Name & Description	Pcs	Remarks
R5107,08	ERJ3GEYJ330	M.RESISTOR CH 1/16W 33	2	
R5109	ERJ3GEYJ470	M.RESISTOR CH 1/16W 47	1	
R5110	ERJ3GEYJ331	M.RESISTOR CH 1/16W 330	1	
R5111	ERJ3GEYJ122	M.RESISTOR CH 1/16W 1.2K	1	
R5112	ERJ3GEYJ151	M.RESISTOR CH 1/16W 150	1	
R5113	ERJ3GEYJ122	M.RESISTOR CH 1/16W 1.2K	1	
R5114	ERJ3GEYJ561	M.RESISTOR CH 1/16W 560	1	
R5115,16	ERJ3GEYJ330	M.RESISTOR CH 1/16W 33	2	
R5117	ERJ3GEYJ102	M.RESISTOR CH 1/16W 1K	1	
R5118	ERJ3GEYJ392	M.RESISTOR CH 1/16W 3.9K	1	
R5119	ERJ3GEYJ470	M.RESISTOR CH 1/16W 47	1	
R5120	ERJ3GEYJ331	M.RESISTOR CH 1/16W 330	1	
R5121	ERJ3GEYJ122	M.RESISTOR CH 1/16W 1.2K	1	
R5122	ERJ3GEYJ331	M.RESISTOR CH 1/16W 330	1	
R5123	ERJ3GEYJ122	M.RESISTOR CH 1/16W 1.2K	1	
R5124	ERJ3GEYJ561	M.RESISTOR CH 1/16W 560	1	
R5125,26	ERJ3GEYJ181	M.RESISTOR CH 1/16W 180	2	
R5127,28	ERJ3GEYJ222	M.RESISTOR CH 1/16W 2.2K	2	
R5129,30	ERJ3GEYJ472	M.RESISTOR CH 1/16W 4.7K	2	
R5131,32	ERJ3GEYJ470	M.RESISTOR CH 1/16W 47	2	
R5133,34	ERJ3GEYJ221	M.RESISTOR CH 1/16W 220	2	
R5135,36	ERJ3GEYJ331	M.RESISTOR CH 1/16W 330	2	
R5137,38	ERJ3GEYJ222	M.RESISTOR CH 1/16W 2.2K	2	
R5139,40	ERJ3GEYJ391	M.RESISTOR CH 1/16W 390	2	
R5141	ERJ3GEYJ470	M.RESISTOR CH 1/16W 47	1	
R5142	ERJ3GEYJ560	M.RESISTOR CH 1/16W 56	1	
R5143	ERJ3GEYJ222	M.RESISTOR CH 1/16W 2.2K	1	
R5144,45	ERJ3GEYJ101	M.RESISTOR CH 1/16W 100	2	
R5146	ERJ3GEYJ470	M.RESISTOR CH 1/16W 47	1	
R5147	ERJ3GEYJ560	M.RESISTOR CH 1/16W 56	1	
R5148	ERJ6GEYJ182	M.RESISTOR CH 1/10W 1.8K	1	
R5149	VRE0034E750	M.RESISTOR CH 1/10W 75	1	
R5150	ERJ3GEYJ470	M.RESISTOR CH 1/16W 47	1	
R5151	VRE0034E750	M.RESISTOR CH 1/10W 75	1	
R5152	ERJ3GEYJ821	M.RESISTOR CH 1/16W 820	1	
R5153,54	ERJ3GEYJ331	M.RESISTOR CH 1/16W 330	2	
R5155,56	ERJ3GEYJ472	M.RESISTOR CH 1/16W 4.7K	2	
R5157	ERJ3GEYJ470	M.RESISTOR CH 1/16W 47	1	
R5158,59	ERJ3GEYJ472	M.RESISTOR CH 1/16W 4.7K	2	
R5160	ERJ3GEYJ470	M.RESISTOR CH 1/16W 47	1	
R5161,62	ERJ3GEYJ330	M.RESISTOR CH 1/16W 33	2	
R5163,64	ERJ6GEYJ122	M.RESISTOR CH 1/10W 1.2K	2	
R5165,66	ERJ6GEYJ391	M.RESISTOR CH 1/10W 390	2	
R5167,68	ERJ3GEYJ560	M.RESISTOR CH 1/16W 56	2	
R5169-72	ERJ3GEY0R00	M.RESISTOR CH 1/16W 0	4	
R5173,74	ERJ3GEYJ470	M.RESISTOR CH 1/16W 47	2	
R5175	ERJ3GEYJ560	M.RESISTOR CH 1/16W 56	1	
R5176,77	ERJ6GEYJ102	M.RESISTOR CH 1/10W 1K	2	
R5178,79	ERJ3GEYJ102	M.RESISTOR CH 1/16W 1K	2	
R5180,81	ERJ3GEYJ470	M.RESISTOR CH 1/16W 47	2	
R5182	ERJ3GEYJ560	M.RESISTOR CH 1/16W 56	1	
R5183	VRE0034E101	M.RESISTOR CH 1/10W 100	1	
R5184	VRE0034E112	M.RESISTOR CH 1/10W 1.1K	1	
R5185	ERJ3GEYJ560	M.RESISTOR CH 1/16W 56	1	
R5186	ERJ3GEYJ122	M.RESISTOR CH 1/16W 1.2K	1	
R5187-90	ERJ3GEYJ470	M.RESISTOR CH 1/16W 47	4	
R5191	ERJ3GEYJ560	M.RESISTOR CH 1/16W 56	1	
R5192,93	ERJ6GEYJ821	M.RESISTOR CH 1/10W 820	2	
R5194	ERJ3GEYJ472	M.RESISTOR CH 1/16W 4.7K	1	
R5195	VRE0034E510	M.RESISTOR CH 1/10W 51	1	
R5196	VRE0034E750	M.RESISTOR CH 1/10W 75	1	
R5197,98	ERJ3GEYJ470	M.RESISTOR CH 1/16W 47	2	
R5199	ERJ3GEYJ560	M.RESISTOR CH 1/16W 56	1	
R5200,01	ERJ3GEYJ152	M.RESISTOR CH 1/16W 1.5K	2	
R5202,03	ERJ3GEYJ102	M.RESISTOR CH 1/16W 1K	2	
R5204,05	ERJ3GEYJ560	M.RESISTOR CH 1/16W 56	2	
R5206,07	ERJ3GEYJ102	M.RESISTOR CH 1/16W 1K	2	
R5208	ERJ3GEYJ821	M.RESISTOR CH 1/16W 820	1	
R5209	ERJ3GEYJ102	M.RESISTOR CH 1/16W 1K	1	
R5210,11	ERJ3GEYJ560	M.RESISTOR CH 1/16W 56	2	
R5212	ERJ3GEYJ392	M.RESISTOR CH 1/16W 3.9K	1	
R5213,14	ERJ3GEYJ102	M.RESISTOR CH 1/16W 1K	2	
R5215	ERJ3GEYJ562	M.RESISTOR CH 1/16W 5.6K	1	
R5216	ERJ3GEYJ222	M.RESISTOR CH 1/16W 2.2K	1	
R5217	ERJ3GEYJ102	M.RESISTOR CH 1/16W 1K	1	

Ref.No.		Part No.	Part Name & Description	Pcs	Remarks
R5218		ERJ3GEYJ103	M.RESISTOR CH 1/16W 10K	1	
R5219		ERJ3GEYJ102	M.RESISTOR CH 1/16W 1K	1	
R5220		ERJ3GEYJ103	M.RESISTOR CH 1/16W 10K	1	
R5221		ERJ3GEYJ470	M.RESISTOR CH 1/16W 47	1	
R5222		ERJ3GEYJ102	M.RESISTOR CH 1/16W 1K	1	
R5301,02		VRE0034E510	M.RESISTOR CH 1/10W 51	2	
R5303,04		ERJ3GEYJ470	M.RESISTOR CH 1/16W 47	2	
R5305		VRE0034E302	M.RESISTOR CH 1/10W 3K	1	
R5306		ERJ3GEYJ150	M.RESISTOR CH 1/16W 15	1	
R5307		VRE0034E302	M.RESISTOR CH 1/10W 3K	1	
R5308		ERJ3GEYJ150	M.RESISTOR CH 1/16W 15	1	
R5309		VRE0034E751	M.RESISTOR CH 1/10W 750	1	
R5310		VRE0034E911	M.RESISTOR CH 1/10W 910	1	
R5311		VRE0034E751	M.RESISTOR CH 1/10W 750	1	
R5312,13		VRE0034E361	M.RESISTOR CH 1/10W 360	2	
R5314,15		VRE0034E391	M.RESISTOR CH 1/10W 390	2	
R5316,17		ERJ3GEYJ470	M.RESISTOR CH 1/16W 47	2	
R5318		ERJ3GEYJ101	M.RESISTOR CH 1/16W 100	1	
R5319,20		ERJ3GEYJ331	M.RESISTOR CH 1/16W 330	2	
R5321,22		ERJ3GEYJ222	M.RESISTOR CH 1/16W 2.2K	2	
R5323,24		VRE0034E391	M.RESISTOR CH 1/10W 390	2	
R5325,26		ERJ3GEYJ470	M.RESISTOR CH 1/16W 47	2	
R5327,28		ERJ3GEYJ560	M.RESISTOR CH 1/16W 56	2	
R5329,30		ERJ6GEYJ182	M.RESISTOR CH 1/10W 1.8K	2	
R5331		VRE0034E471	M.RESISTOR CH 1/10W 470	1	
R5332		VRE0034E103	M.RESISTOR CH 1/10W 10K	1	
R5333		VRE0034E431	M.RESISTOR CH 1/10W 430	1	
R5334		VRE0034E271	M.RESISTOR CH 1/10W 270	1	
R5335		VRE0034E471	M.RESISTOR CH 1/10W 470	1	
R5336		VRE0034E103	M.RESISTOR CH 1/10W 10K	1	
R5337		VRE0034E431	M.RESISTOR CH 1/10W 430	1	
R5338,39		ERJ3GEYJ221	M.RESISTOR CH 1/16W 220	2	
R5340		ERJ3GEYJ470	M.RESISTOR CH 1/16W 47	1	
R5341		ERJ3GEYJ560	M.RESISTOR CH 1/16W 56	1	
R5342		ERJ6GEYJ152	M.RESISTOR CH 1/10W 1.5K	1	
R5343		ERJ3GEYJ472	M.RESISTOR CH 1/16W 4.7K	1	
R5344		VRE0034E121	M.RESISTOR CH 1/10W 120	1	
R5347		ERJ3GEYJ101	M.RESISTOR CH 1/16W 100	1	
R5348,49		ERJ3GEYJ470	M.RESISTOR CH 1/16W 47	2	
R5350		ERJ3GEYJ821	M.RESISTOR CH 1/16W 820	1	
R5352		ERJ3GEYJ331	M.RESISTOR CH 1/16W 330	1	
R5353,54		ERJ3GEYJ101	M.RESISTOR CH 1/16W 100	2	
R5355		ERJ3GEYJ470	M.RESISTOR CH 1/16W 47	1	
R5356		ERJ3GEYJ560	M.RESISTOR CH 1/16W 56	1	
R5357		ERJ6GEYJ102	M.RESISTOR CH 1/10W 1K	1	
R5358,59		VRE0034E510	M.RESISTOR CH 1/10W 51	2	
R5360		ERJ3GEYJ470	M.RESISTOR CH 1/16W 47	1	
R5361		ERJ3GEYJ560	M.RESISTOR CH 1/16W 56	1	
R5362		ERJ6GEYJ102	M.RESISTOR CH 1/10W 1K	1	
R5363		ERJ3GEYJ472	M.RESISTOR CH 1/16W 4.7K	1	
R5364,65		VRE0034E510	M.RESISTOR CH 1/10W 51	2	
R5367,68		ERJ3GEYJ470	M.RESISTOR CH 1/16W 47	2	
R5369		ERJ3GEYJ391	M.RESISTOR CH 1/16W 390	1	
R5370		ERJ3GEYJ122	M.RESISTOR CH 1/16W 1.2K	1	
R5371		ERJ3GEYJ470	M.RESISTOR CH 1/16W 47	1	
R5372		ERJ3GEYJ331	M.RESISTOR CH 1/16W 330	1	
R5373		ERJ3GEYJ122	M.RESISTOR CH 1/16W 1.2K	1	
R5374		ERJ3GEYJ561	M.RESISTOR CH 1/16W 560	1	
R5375,76		ERJ3GEYJ222	M.RESISTOR CH 1/16W 2.2K	2	
R5377,78		ERJ3GEYJ391	M.RESISTOR CH 1/16W 390	2	
R5379		ERJ3GEYJ470	M.RESISTOR CH 1/16W 47	1	
R5380		ERJ3GEYJ560	M.RESISTOR CH 1/16W 56	1	
R5381		ERJ6GEYJ122	M.RESISTOR CH 1/10W 1.2K	1	
R5383		ERJ3GEYJ472	M.RESISTOR CH 1/16W 4.7K	1	
R5384		VRE0034E510	M.RESISTOR CH 1/10W 51	1	
R5385		VRE0034E130	M.RESISTOR CH 1/10W 13	1	
R5386		ERJ3GEYJ330	M.RESISTOR CH 1/16W 33	1	
R5387		ERJ3GEYJ560	M.RESISTOR CH 1/16W 56	1	
R5388		ERJ3GEYJ122	M.RESISTOR CH 1/16W 1.2K	1	
R5389		ERJ3GEYJ330	M.RESISTOR CH 1/16W 33	1	
R5390		ERJ3GEYJ560	M.RESISTOR CH 1/16W 56	1	
R5391		ERJ3GEYJ122	M.RESISTOR CH 1/16W 1.2K	1	
R5392		ERJ3GEYJ330	M.RESISTOR CH 1/16W 33	1	
R5393		ERJ3GEYJ560	M.RESISTOR CH 1/16W 56	1	
R5394		ERJ3GEYJ122	M.RESISTOR CH 1/16W 1.2K	1	

Ref.No.		Part No.	Part Name & Description	Pcs	Remarks
R5395		ERJ3GEYJ470	M.RESISTOR CH 1/16W 47	1	
R5396		ERJ3GEYJ560	M.RESISTOR CH 1/16W 56	1	
R5397		ERJ3GEYJ182	M.RESISTOR CH 1/16W 1.8K	1	
R5398,99		ERJ3GEYJ330	M.RESISTOR CH 1/16W 33	2	
R5400		ERJ3GEYJ102	M.RESISTOR CH 1/16W 1K	1	
R5401		ERJ3GEYJ392	M.RESISTOR CH 1/16W 3.9K	1	
R5402		ERJ3GEYJ561	M.RESISTOR CH 1/16W 560	1	
R5403		ERJ3GEYJ122	M.RESISTOR CH 1/16W 1.2K	1	
R5404		ERJ3GEYJ331	M.RESISTOR CH 1/16W 330	1	
R5405		ERJ3GEYJ122	M.RESISTOR CH 1/16W 1.2K	1	
R5406		ERJ3GEYJ561	M.RESISTOR CH 1/16W 560	1	
R5407,08		ERJ3GEYJ330	M.RESISTOR CH 1/16W 33	2	
R5409		ERJ3GEYJ470	M.RESISTOR CH 1/16W 47	1	
R5410		ERJ3GEYJ331	M.RESISTOR CH 1/16W 330	1	
R5411		ERJ3GEYJ122	M.RESISTOR CH 1/16W 1.2K	1	
R5412		ERJ3GEYJ151	M.RESISTOR CH 1/16W 150	1	
R5413		ERJ3GEYJ122	M.RESISTOR CH 1/16W 1.2K	1	
R5414		ERJ3GEYJ561	M.RESISTOR CH 1/16W 560	1	
R5415,16		ERJ3GEYJ330	M.RESISTOR CH 1/16W 33	2	
R5417		ERJ3GEYJ102	M.RESISTOR CH 1/16W 1K	1	
R5418		ERJ3GEYJ392	M.RESISTOR CH 1/16W 3.9K	1	
R5419		ERJ3GEYJ470	M.RESISTOR CH 1/16W 47	1	
R5420		ERJ3GEYJ331	M.RESISTOR CH 1/16W 330	1	
R5421		ERJ3GEYJ122	M.RESISTOR CH 1/16W 1.2K	1	
R5422		ERJ3GEYJ331	M.RESISTOR CH 1/16W 330	1	
R5423		ERJ3GEYJ122	M.RESISTOR CH 1/16W 1.2K	1	
R5424		ERJ3GEYJ561	M.RESISTOR CH 1/16W 560	1	
R5425,26		ERJ3GEYJ222	M.RESISTOR CH 1/16W 2.2K	2	
R5427,28		ERJ3GEYJ181	M.RESISTOR CH 1/16W 180	2	
R5429,30		ERJ3GEYJ472	M.RESISTOR CH 1/16W 4.7K	2	
R5431,32		ERJ3GEYJ470	M.RESISTOR CH 1/16W 47	2	
R5433,34		ERJ3GEYJ221	M.RESISTOR CH 1/16W 220	2	
R5435,36		ERJ3GEYJ331	M.RESISTOR CH 1/16W 330	2	
R5437,38		ERJ3GEYJ222	M.RESISTOR CH 1/16W 2.2K	2	
R5439,40		ERJ3GEYJ391	M.RESISTOR CH 1/16W 390	2	
R5441		ERJ3GEYJ470	M.RESISTOR CH 1/16W 47	1	
R5442		ERJ3GEYJ560	M.RESISTOR CH 1/16W 56	1	
R5443		ERJ3GEYJ222	M.RESISTOR CH 1/16W 2.2K	1	
R5444,45		ERJ3GEYJ101	M.RESISTOR CH 1/16W 100	2	
R5446		ERJ3GEYJ470	M.RESISTOR CH 1/16W 47	1	
R5447		ERJ3GEYJ560	M.RESISTOR CH 1/16W 56	1	
R5448		ERJ6GEYJ182	M.RESISTOR CH 1/10W 1.8K	1	
R5449		VRE0034E750	M.RESISTOR CH 1/10W 75	1	
R5450		ERJ3GEYJ470	M.RESISTOR CH 1/16W 47	1	
R5451		VRE0034E750	M.RESISTOR CH 1/10W 75	1	
R5452		ERJ3GEYJ821	M.RESISTOR CH 1/16W 820	1	
R5453,54		ERJ3GEYJ331	M.RESISTOR CH 1/16W 330	2	
R5455,56		ERJ3GEYJ472	M.RESISTOR CH 1/16W 4.7K	2	
R5457		ERJ3GEYJ470	M.RESISTOR CH 1/16W 47	1	
R5458,59		ERJ3GEYJ472	M.RESISTOR CH 1/16W 4.7K	2	
R5460		ERJ3GEYJ470	M.RESISTOR CH 1/16W 47	1	
R5461,62		ERJ3GEYJ330	M.RESISTOR CH 1/16W 33	2	
R5463,64		ERJ6GEYJ122	M.RESISTOR CH 1/10W 1.2K	2	
R5465,66		ERJ6GEYJ391	M.RESISTOR CH 1/10W 390	2	
R5467,68		ERJ3GEYJ560	M.RESISTOR CH 1/16W 56	2	
R5473,74		ERJ3GEYJ470	M.RESISTOR CH 1/16W 47	2	
R5475		ERJ3GEYJ560	M.RESISTOR CH 1/16W 56	1	
R5476,77		ERJ6GEYJ102	M.RESISTOR CH 1/10W 1K	2	
R5478,79		ERJ3GEYJ102	M.RESISTOR CH 1/16W 1K	2	
R5480,81		ERJ3GEYJ470	M.RESISTOR CH 1/16W 47	2	
R5482		ERJ3GEYJ560	M.RESISTOR CH 1/16W 56	1	
R5483		VRE0034E101	M.RESISTOR CH 1/10W 100	1	
R5484		VRE0034E112	M.RESISTOR CH 1/10W 1.1K	1	
R5485		ERJ3GEYJ560	M.RESISTOR CH 1/16W 56	1	
R5486		ERJ3GEYJ122	M.RESISTOR CH 1/16W 1.2K	1	
R5487-90		ERJ3GEYJ470	M.RESISTOR CH 1/16W 47	4	
R5491		ERJ3GEYJ560	M.RESISTOR CH 1/16W 56	1	
R5492,93		ERJ6GEYJ821	M.RESISTOR CH 1/10W 820	2	
R5494		ERJ3GEYJ472	M.RESISTOR CH 1/16W 4.7K	1	
R5495		VRE0034E510	M.RESISTOR CH 1/10W 51	1	
R5496		VRE0034E750	M.RESISTOR CH 1/10W 75	1	
R5497,98		ERJ3GEYJ470	M.RESISTOR CH 1/16W 47	2	
R5499		ERJ3GEYJ560	M.RESISTOR CH 1/16W 56	1	
R5500,01		ERJ3GEYJ152	M.RESISTOR CH 1/16W 1.5K	2	
R5502,03		ERJ3GEYJ102	M.RESISTOR CH 1/16W 1K	2	

Ref.No.		Part No.	Part Name & Description	Pcs	Remarks
R5504,05		ERJ3GEYJ560	M.RESISTOR CH 1/16W 56	2	
R5506,07		ERJ3GEYJ102	M.RESISTOR CH 1/16W 1K	2	
R5508		ERJ3GEYJ821	M.RESISTOR CH 1/16W 820	1	
R5509		ERJ3GEYJ102	M.RESISTOR CH 1/16W 1K	1	
R5510,11		ERJ3GEYJ560	M.RESISTOR CH 1/16W 56	2	
R5512		ERJ3GEYJ392	M.RESISTOR CH 1/16W 3.9K	1	
R5513,14		ERJ3GEYJ102	M.RESISTOR CH 1/16W 1K	2	
R5515		ERJ3GEYJ562	M.RESISTOR CH 1/16W 5.6K	1	
R5516		ERJ3GEYJ222	M.RESISTOR CH 1/16W 2.2K	1	
R5517		ERJ3GEYJ102	M.RESISTOR CH 1/16W 1K	1	
R5518		ERJ3GEYJ103	M.RESISTOR CH 1/16W 10K	1	
R5519		ERJ3GEYJ102	M.RESISTOR CH 1/16W 1K	1	
R5520		ERJ3GEYJ103	M.RESISTOR CH 1/16W 10K	1	
R5521		ERJ3GEYJ470	M.RESISTOR CH 1/16W 47	1	
R5522		ERJ3GEYJ102	M.RESISTOR CH 1/16W 1K	1	
R5601,02		ERJ3GEYJ101	M.RESISTOR CH 1/16W 100	2	
R5603		ERJ3GEYJ331	M.RESISTOR CH 1/16W 330	1	
R5604-06		ERJ3GEYJ101	M.RESISTOR CH 1/16W 100	3	
R5609-17		ERJ3GEYJ101	M.RESISTOR CH 1/16W 100	9	
R5619		ERJ3GEYJ331	M.RESISTOR CH 1/16W 330	1	
R5620,21		ERJ3GEYJ100	M.RESISTOR CH 1/16W 10	2	
R5622		ERJ3GEYJ271	M.RESISTOR CH 1/16W 270	1	
R5623		ERJ3GEYJ101	M.RESISTOR CH 1/16W 100	1	
R5624		ERJ3GEYJ104	M.RESISTOR CH 1/16W 100K	1	
R5625		ERJ3GEYJ101	M.RESISTOR CH 1/16W 100	1	
R5626		VRE0034E103	M.RESISTOR CH 1/10W 10K	1	
R5627		ERJ3GEY0R00	M.RESISTOR CH 1/16W 0	1	
R5628		VRE0034E752	M.RESISTOR CH 1/10W 7.5K	1	
R5629,30		ERJ3GEY0R00	M.RESISTOR CH 1/16W 0	2	
R5631		ERSB10J182	M.RESISTOR 1W 1.8K	1	
R5632		VRE0034E432	M.RESISTOR CH 1/10W 4.3K	1	
R5633		VRE0034E103	M.RESISTOR CH 1/10W 10K	1	
R5634		ERJ3GEYJ101	M.RESISTOR CH 1/16W 100	1	
R5635		ERJ3GEY0R00	M.RESISTOR CH 1/16W 0	1	
R5637		ERJ3GEYJ820	M.RESISTOR CH 1/16W 82	1	
R5638		ERJ3GEYJ271	M.RESISTOR CH 1/16W 270	1	
R5639		ERJ3GEY0R00	M.RESISTOR CH 1/16W 0	1	
R5640		ERJ3GEYJ102	M.RESISTOR CH 1/16W 1K	1	
R5647,48		VRE0034E750	M.RESISTOR CH 1/10W 75	2	
R5649,50		ERJ3GEYJ101	M.RESISTOR CH 1/16W 100	2	
R5651		ERJ3GEYJ221	M.RESISTOR CH 1/16W 220	1	
R5652,53		ERJ3GEYJ330	M.RESISTOR CH 1/16W 33	2	
R5654-57		ERJ3GEYJ101	M.RESISTOR CH 1/16W 100	4	
R5659		ERJ3GEY0R00	M.RESISTOR CH 1/16W 0	1	
R5660		ERJ3GEYJ330	M.RESISTOR CH 1/16W 33	1	
R5661-64		ERJ3GEYJ101	M.RESISTOR CH 1/16W 100	4	
R5665,66		ERJ6GEYJ331	M.RESISTOR CH 1/10W 330	2	
R5667,68		ERJ3GEYJ560	M.RESISTOR CH 1/16W 56	2	
R5669,70		ERJ6GEYJ331	M.RESISTOR CH 1/10W 330	2	
R5671,72		ERJ3GEYJ560	M.RESISTOR CH 1/16W 56	2	
R5673		ERJ3GEYJ103	M.RESISTOR CH 1/16W 10K	1	
R5674		ERJ3GEYJ392	M.RESISTOR CH 1/16W 3.9K	1	
R5675		ERJ3GEYJ103	M.RESISTOR CH 1/16W 10K	1	
R5676		VRE0034E103	M.RESISTOR CH 1/10W 10K	1	
R5677		VRE0034E562	M.RESISTOR CH 1/10W 5.6K	1	
R5678		VRE0034E362	M.RESISTOR CH 1/10W 3.6K	1	
R5679,80		ERJ3GEYJ470	M.RESISTOR CH 1/16W 47	2	
R5701,02		ERJ3GEYJ101	M.RESISTOR CH 1/16W 100	2	
R5703		ERJ3GEYJ331	M.RESISTOR CH 1/16W 330	1	
R5704-06		ERJ3GEYJ101	M.RESISTOR CH 1/16W 100	3	
R5709-17		ERJ3GEYJ101	M.RESISTOR CH 1/16W 100	9	
R5719		ERJ3GEYJ331	M.RESISTOR CH 1/16W 330	1	
R5720,21		ERJ3GEYJ100	M.RESISTOR CH 1/16W 10	2	
R5722		ERJ3GEYJ271	M.RESISTOR CH 1/16W 270	1	
R5723		ERJ3GEYJ101	M.RESISTOR CH 1/16W 100	1	
R5724		ERJ3GEYJ104	M.RESISTOR CH 1/16W 100K	1	
R5725		ERJ3GEYJ101	M.RESISTOR CH 1/16W 100	1	
R5726		VRE0034E103	M.RESISTOR CH 1/10W 10K	1	
R5727		ERJ3GEY0R00	M.RESISTOR CH 1/16W 0	1	
R5728		VRE0034E752	M.RESISTOR CH 1/10W 7.5K	1	
R5729,30		ERJ3GEY0R00	M.RESISTOR CH 1/16W 0	2	
R5731		ERSB10J182	M.RESISTOR 1W 1.8K	1	
R5732		VRE0034E432	M.RESISTOR CH 1/10W 4.3K	1	
R5733		VRE0034E103	M.RESISTOR CH 1/10W 10K	1	
R5734		ERJ3GEYJ101	M.RESISTOR CH 1/16W 100	1	

Ref.No.		Part No.	Part Name & Description	Pcs	Remarks
R5735		ERJ3GEY0R00	M.RESISTOR CH 1/16W 0	1	
R5737		ERJ3GEYJ820	M.RESISTOR CH 1/16W 82	1	
R5738		ERJ3GEYJ271	M.RESISTOR CH 1/16W 270	1	
R5739		ERJ3GEY0R00	M.RESISTOR CH 1/16W 0	1	
R5740		ERJ3GEYJ102	M.RESISTOR CH 1/16W 1K	1	
R5747,48		VRE0034E750	M.RESISTOR CH 1/10W 75	2	
R5749,50		ERJ3GEYJ101	M.RESISTOR CH 1/16W 100	2	
R5751		ERJ3GEYJ221	M.RESISTOR CH 1/16W 220	1	
R5752,53		ERJ3GEYJ330	M.RESISTOR CH 1/16W 33	2	
R5754-57		ERJ3GEYJ101	M.RESISTOR CH 1/16W 100	4	
R5759		ERJ3GEY0R00	M.RESISTOR CH 1/16W 0	1	
R5760		ERJ3GEYJ330	M.RESISTOR CH 1/16W 33	1	
R5761-64		ERJ3GEYJ101	M.RESISTOR CH 1/16W 100	4	
R5765,66		ERJ6GEYJ331	M.RESISTOR CH 1/10W 330	2	
R5767,68		ERJ3GEYJ560	M.RESISTOR CH 1/16W 56	2	
R5769,70		ERJ6GEYJ331	M.RESISTOR CH 1/10W 330	2	
R5771,72		ERJ3GEYJ560	M.RESISTOR CH 1/16W 56	2	
R5773-84		ERJ3GEY0R00	M.RESISTOR CH 1/16W 0	12	
R5801		VRE0034E121	M.RESISTOR CH 1/10W 120	1	
R5802		VRE0034E820	M.RESISTOR CH 1/10W 82	1	
R5803		ERG2SJ150	M.RESISTOR 2W 15	1	
R5804-06		ERJ3GEYJ103	M.RESISTOR CH 1/16W 10K	3	
R5808		ERJ3GEYJ473	M.RESISTOR CH 1/16W 47K	1	
R5809		ERJ3GEYJ103	M.RESISTOR CH 1/16W 10K	1	
R5810		ERJ3GEYJ100	M.RESISTOR CH 1/16W 10	1	
R5812		ERJ3GEYJ473	M.RESISTOR CH 1/16W 47K	1	
R5813		ERJ3GEYJ103	M.RESISTOR CH 1/16W 10K	1	
R5814		ERJ3GEYJ100	M.RESISTOR CH 1/16W 10	1	
R5816		ERJ3GEYJ473	M.RESISTOR CH 1/16W 47K	1	
R5817		ERJ3GEYJ103	M.RESISTOR CH 1/16W 10K	1	
R5818		ERJ3GEYJ100	M.RESISTOR CH 1/16W 10	1	
R5820		ERJ3GEYJ473	M.RESISTOR CH 1/16W 47K	1	
R5821		ERJ3GEYJ103	M.RESISTOR CH 1/16W 10K	1	
R5822		ERJ3GEYJ100	M.RESISTOR CH 1/16W 10	1	
R5824		ERJ3GEYJ473	M.RESISTOR CH 1/16W 47K	1	
R5825		ERJ3GEYJ103	M.RESISTOR CH 1/16W 10K	1	
R5826		ERJ3GEYJ100	M.RESISTOR CH 1/16W 10	1	
R5828		ERJ3GEYJ473	M.RESISTOR CH 1/16W 47K	1	
R5829		ERJ3GEYJ103	M.RESISTOR CH 1/16W 10K	1	
R5830		ERJ3GEYJ100	M.RESISTOR CH 1/16W 10	1	
R5832		ERJ3GEYJ473	M.RESISTOR CH 1/16W 47K	1	
R5833		ERJ3GEYJ103	M.RESISTOR CH 1/16W 10K	1	
R5834		ERJ3GEYJ100	M.RESISTOR CH 1/16W 10	1	
R5836		ERJ3GEYJ473	M.RESISTOR CH 1/16W 47K	1	
R5837		ERJ3GEYJ103	M.RESISTOR CH 1/16W 10K	1	
R5838		ERJ3GEYJ100	M.RESISTOR CH 1/16W 10	1	
R5840		ERJ3GEYJ473	M.RESISTOR CH 1/16W 47K	1	
R5841		ERJ3GEYJ103	M.RESISTOR CH 1/16W 10K	1	
R5842		ERJ3GEYJ100	M.RESISTOR CH 1/16W 10	1	
R5844		ERJ3GEYJ473	M.RESISTOR CH 1/16W 47K	1	
R5845		ERJ3GEYJ103	M.RESISTOR CH 1/16W 10K	1	
R5846		ERJ3GEYJ100	M.RESISTOR CH 1/16W 10	1	
R5848		ERJ3GEYJ473	M.RESISTOR CH 1/16W 47K	1	
R5849		ERJ3GEYJ103	M.RESISTOR CH 1/16W 10K	1	
R5850		ERJ3GEYJ100	M.RESISTOR CH 1/16W 10	1	
R5852		ERJ3GEYJ473	M.RESISTOR CH 1/16W 47K	1	
R5853		ERJ3GEYJ103	M.RESISTOR CH 1/16W 10K	1	
R5854		ERJ3GEYJ100	M.RESISTOR CH 1/16W 10	1	
R5855		ERJ3GEYJ272	M.RESISTOR CH 1/16W 2.7K	1	
R5856		ERJ3GEYJ222	M.RESISTOR CH 1/16W 2.2K	1	
R5857		ERJ3GEYJ103	M.RESISTOR CH 1/16W 10K	1	
R5858		ERJ3GEYJ273	M.RESISTOR CH 1/16W 27K	1	
R5859		ERJ3GEYJ103	M.RESISTOR CH 1/16W 10K	1	
R5860		ERJ3GEYJ100	M.RESISTOR CH 1/16W 10	1	
R5861		ERJ3GEYJ272	M.RESISTOR CH 1/16W 2.7K	1	
R5862		ERJ3GEYJ222	M.RESISTOR CH 1/16W 2.2K	1	
R5863		ERJ3GEYJ103	M.RESISTOR CH 1/16W 10K	1	
R5864		ERJ3GEYJ273	M.RESISTOR CH 1/16W 27K	1	
R5865		ERJ3GEYJ103	M.RESISTOR CH 1/16W 10K	1	
R5866		ERJ3GEYJ100	M.RESISTOR CH 1/16W 10	1	
R5867		ERJ3GEYJ272	M.RESISTOR CH 1/16W 2.7K	1	
R5868		ERJ3GEYJ222	M.RESISTOR CH 1/16W 2.2K	1	
R5869		ERJ3GEYJ103	M.RESISTOR CH 1/16W 10K	1	
R5870		ERJ3GEYJ273	M.RESISTOR CH 1/16W 27K	1	
R5871		ERJ3GEYJ103	M.RESISTOR CH 1/16W 10K	1	

Ref.No.		Part No.	Part Name & Description	Pcs	Remarks
R5872		ERJ3GEYJ100	M.RESISTOR CH 1/16W 10	1	
R5873		ERJ3GEYJ272	M.RESISTOR CH 1/16W 2.7K	1	
R5874		ERJ3GEYJ222	M.RESISTOR CH 1/16W 2.2K	1	
R5875		ERJ3GEYJ103	M.RESISTOR CH 1/16W 10K	1	
R5876		ERJ3GEYJ273	M.RESISTOR CH 1/16W 27K	1	
R5877		ERJ3GEYJ103	M.RESISTOR CH 1/16W 10K	1	
R5878		ERJ3GEYJ100	M.RESISTOR CH 1/16W 10	1	
R5879		ERJ3GEYJ103	M.RESISTOR CH 1/16W 10K	1	
R5880		ERJ3GEYJ183	M.RESISTOR CH 1/16W 18K	1	
R5881-93		ERJ3GEYJ103	M.RESISTOR CH 1/16W 10K	13	
R5894		ERJ3GEYJ472	M.RESISTOR CH 1/16W 4.7K	1	
R5895		ERJ3GEYJ103	M.RESISTOR CH 1/16W 10K	1	
R5896		ERJ3GEYJ472	M.RESISTOR CH 1/16W 4.7K	1	
R5897		ERJ3GEYJ103	M.RESISTOR CH 1/16W 10K	1	
R5898		ERJ3GEYJ472	M.RESISTOR CH 1/16W 4.7K	1	
R5899		ERJ3GEYJ103	M.RESISTOR CH 1/16W 10K	1	
R5900		ERJ3GEYJ472	M.RESISTOR CH 1/16W 4.7K	1	
TP5001,02		VJR0646	TEST POINT	2	
TP5301,02		VJR0646	TEST POINT	2	
TP5601-05		VJR0646	TEST POINT	5	
TP5701-05		VJR0646	TEST POINT	5	
TP5801-06		VJR0646	TEST POINT	6	
TPG5001,02		VJR0646	TEST POINT	2	
TPG5301,02		VJR0646	TEST POINT	2	
TPG5601		VJR0646	TEST POINT	1	
TPG5701		VJR0646	TEST POINT	1	
TPG5801		VJR0646	TEST POINT	1	
VC5601		ECV1ZW20X53T	V.CAPACITOR 20P	1	
VC5701		ECV1ZW20X53T	V.CAPACITOR 20P	1	
VL5001		EIV7EL068B	TRANSFORMER	1	
VL5002		EIV7EL073B	TRANSFORMER	1	
VL5003		EIV7EL072B	TRANSFORMER	1	
VL5301		EIV7EL068B	TRANSFORMER	1	
VL5302		EIV7EL073B	TRANSFORMER	1	
VL5303		EIV7EL072B	TRANSFORMER	1	
VL5601		VLQ0502	COIL	1	
VL5701		VLQ0502	COIL	1	
VR5001		VRV0113B101	V.RESISTOR 100	1	
VR5003		VRV0113B101	V.RESISTOR 100	1	
VR5301		VRV0113B101	V.RESISTOR 100	1	
VR5303		VRV0113B101	V.RESISTOR 100	1	
VR5601		VRV0113B101	V.RESISTOR 100	1	
VR5701		VRV0113B101	V.RESISTOR 100	1	
			MISCELLANEOUS		
		VML2143	LEVER. ARM.	1	
		VML2144	LEVER. ARM.	1	
		VSC1381	HEAT SINK	2	
		VSC1382	HEAT SINK	2	
		VSC3626	HEAT SINK	4	
		VXA4420	P.C.BOARD SHIELD PLATE	1	
		XTV3+6FFR	SCREW	5	

S3 TC/CUE VEP86123B
S3 SUB TC/CUE SUB VEP86124A

S3

S3 SUB

Ref.No.		Part No.	Part Name & Description	Pcs	Remarks
S3	■	VEP86123B	P.C.BOARD W/COMPONENT		
			TC/CUE		
S3 SUB	■	VEP86124A	P.C.BOARD W/COMPONENT		FOR VEP86123B
			TC/CUE SUB		
			CAPACITORS		
C6001		ECEV1EV100	E.CAPACITOR 25V 10U	1	
C6001		ECUX1H103ZFV	C.CAPACITOR CH 50V 0.01U	1	
C6002		ECEV1EV100	E.CAPACITOR 25V 10U	1	
C6003		ECEV1CV220	E.CAPACITOR 16V 22U	1	
C6003		ECUX1H103ZFV	C.CAPACITOR CH 50V 0.01U	1	
C6004		ECEV1EV100	E.CAPACITOR 25V 10U	1	
C6004		ECUX1H103ZFV	C.CAPACITOR CH 50V 0.01U	1	
C6005		ECEV1EV100	E.CAPACITOR 25V 10U	1	
C6005		ECUX1H103ZFV	C.CAPACITOR CH 50V 0.01U	1	
C6006		ECEV1CV220	E.CAPACITOR 16V 22U	1	
C6007,08		ECEV1EV100	E.CAPACITOR 25V 10U	2	
C6009		ECEV1CV220	E.CAPACITOR 16V 22U	1	
C6010,11		ECEV1EV100	E.CAPACITOR 25V 10U	2	
C6012		ECEV1CV220	E.CAPACITOR 16V 22U	1	
C6012		ECUX1H103ZFV	C.CAPACITOR CH 50V 0.01U	1	
C6013		ECEV1EV100	E.CAPACITOR 25V 10U	1	
C6013		ECUX1H103ZFV	C.CAPACITOR CH 50V 0.01U	1	
C6014		ECEV1EV100	E.CAPACITOR 25V 10U	1	
C6014		ECUX1H103ZFV	C.CAPACITOR CH 50V 0.01U	1	
C6015		ECEV1CV220	E.CAPACITOR 16V 22U	1	
C6015		ECUX1H103ZFV	C.CAPACITOR CH 50V 0.01U	1	
C6016		ECEV1CV470	E.CAPACITOR 16V 47U	1	
C6016		ECUX1H103ZFV	C.CAPACITOR CH 50V 0.01U	1	
C6017		ECEV1CV470	E.CAPACITOR 16V 47U	1	
C6017		ECUX1H103ZFV	C.CAPACITOR CH 50V 0.01U	1	
C6018		ECUM1H103ZFN	C.CAPACITOR CH 50V 0.01U	1	
C6018		ECUX1H103ZFV	C.CAPACITOR CH 50V 0.01U	1	
C6019		ECUM1H103ZFN	C.CAPACITOR CH 50V 0.01U	1	
C6019		ECUX1H103ZFV	C.CAPACITOR CH 50V 0.01U	1	
C6020		ECEV1CV470	E.CAPACITOR 16V 47U	1	
C6020		ECUX1H103ZFV	C.CAPACITOR CH 50V 0.01U	1	
C6021		ECUM1H103ZFN	C.CAPACITOR CH 50V 0.01U	1	
C6021		ECUX1H103ZFV	C.CAPACITOR CH 50V 0.01U	1	
C6022		ECUM1H103ZFN	C.CAPACITOR CH 50V 0.01U	1	
C6022		ECUX1H103ZFV	C.CAPACITOR CH 50V 0.01U	1	
C6023		ECEV1CV470	E.CAPACITOR 16V 47U	1	
C6023-30		ECUX1H103ZFV	C.CAPACITOR CH 50V 0.01U	8	
C6031		ECA1HXS010	E.CAPACITOR 50V 1U	1	
C6031,32		ECUM1H103ZFN	C.CAPACITOR CH 50V 0.01U	2	
C6032		ECUX1H103ZFV	C.CAPACITOR CH 50V 0.01U	1	
C6033		ECEV1CV470	E.CAPACITOR 16V 47U	1	
C6033		ECUX1H103ZFV	C.CAPACITOR CH 50V 0.01U	1	
C6034		ECEV1EV100	E.CAPACITOR 25V 10U	1	
C6034,35		ECUX1H103ZFV	C.CAPACITOR CH 50V 0.01U	2	
C6035		ECUM1H472KBN	C.CAPACITOR CH 50V 4700P	1	
C6036		ECEV1CV470	E.CAPACITOR 16V 47U	1	
C6036,37		ECUX1H103ZFV	C.CAPACITOR CH 50V 0.01U	2	
C6037		ECUM1H472KBN	C.CAPACITOR CH 50V 4700P	1	
C6038		ECEV1EV100	E.CAPACITOR 25V 10U	1	
C6038,39		ECUX1H103ZFV	C.CAPACITOR CH 50V 0.01U	2	
C6039		ECUM1H472KBN	C.CAPACITOR CH 50V 4700P	1	
C6040		ECEV1CV470	E.CAPACITOR 16V 47U	1	
C6041		ECUX1H103ZFV	C.CAPACITOR CH 50V 0.01U	1	
C6041		ECUM1H472KBN	C.CAPACITOR CH 50V 4700P	1	
C6042		ECUM1E224ZFN	C.CAPACITOR CH 25V 0.22U	1	
C6042		ECUM1H220JCN	C.CAPACITOR CH 50V 22P	1	
C6043		ECUX1H103ZFV	C.CAPACITOR CH 50V 0.01U	1	
C6043		ECUM1H220JCN	C.CAPACITOR CH 50V 22P	1	
C6044		ECA1HXS010	E.CAPACITOR 50V 1U	1	
C6044		ECUM1H103ZFN	C.CAPACITOR CH 50V 0.01U	1	
C6045		ECA1EXS330	E.CAPACITOR 25V 33U	1	
C6045		ECUM1H103ZFN	C.CAPACITOR CH 50V 0.01U	1	
C6046		ECA1EXS330	E.CAPACITOR 25V 33U	1	

Ref.No.		Part No.	Part Name & Description	Pcs	Remarks
C6046		ECUM1H103ZFN	C.CAPACITOR CH 50V 0.01U	1	
C6047		ECA1CXS100	E.CAPACITOR 16V 10U	1	
C6047,48		ECUM1H103ZFN	C.CAPACITOR CH 50V 0.01U	2	
C6048		ECUX1H103ZFV	C.CAPACITOR CH 50V 0.01U	1	
C6049,50		ECUM1H103ZFN	C.CAPACITOR CH 50V 0.01U	2	
C6051-54		ECEV1EV100	E.CAPACITOR 25V 10U	4	
C6055,56		ECUM1H103ZFN	C.CAPACITOR CH 50V 0.01U	2	
C6058,59		ECUX1H330JCV	C.CAPACITOR 50V 33P	2	
C6070		ECUX1H103ZFV	C.CAPACITOR CH 50V 0.01U	1	
C6071		ECA1VXKN4R7	E.CAPACITOR 35V 4.7U	1	
C6072		ECA1CXS100	E.CAPACITOR 16V 10U	1	
C6073		ECA1VXKN4R7	E.CAPACITOR 35V 4.7U	1	
C6074		ECUX1H120JCV	C.CAPACITOR CH 50V 12P	1	
C6075,76		ECUX1H222KBV	C.CAPACITOR CH 50V 2200P	2	
C6077		ECA1CXS100	E.CAPACITOR 16V 10U	1	
C6078		ECA1VXKN4R7	E.CAPACITOR 35V 4.7U	1	
C6079		ECA1CXS100	E.CAPACITOR 16V 10U	1	
C6080		ECUX1H103ZFV	C.CAPACITOR CH 50V 0.01U	1	
C6081		ECA1VXKN4R7	E.CAPACITOR 35V 4.7U	1	
C6082		ECUX1H103ZFV	C.CAPACITOR CH 50V 0.01U	1	
C6083,84		ECA1VXKN4R7	E.CAPACITOR 35V 4.7U	2	
C6085,86		ECUX1H150JCV	C.CAPACITOR 50V 15P	2	
C6087,88		ECUX1H180JCV	C.CAPACITOR 50V 18P	2	
C6091,92		ECUX1H103ZFV	C.CAPACITOR CH 50V 0.01U	2	
C6095		ECA1AXS680	E.CAPACITOR 10V 68U	1	
C6100,01		ECUX1H470JCV	C.CAPACITOR 50V 47P	2	
C6102		ECUX1H103ZFV	C.CAPACITOR CH 50V 0.01U	1	
C6301		ECA1VXK470F	E.CAPACITOR 35V 47U	1	
C6302		ECUX1H103ZFV	C.CAPACITOR CH 50V 0.01U	1	
C6303		ECA1VXK470F	E.CAPACITOR 35V 47U	1	
C6304,05		ECUX1H103KBV	C.CAPACITOR CH 50V 0.01U	2	
C6306		ECQB1H103JF	P.CAPACITOR 50V 0.01U	1	
C6307		ECQB1H682JF	P.CAPACITOR 50V 6800P	1	
C6308		ECA1VXK470F	E.CAPACITOR 35V 47U	1	
C6309,10		ECUX1H152KBV	C.CAPACITOR CH 50V 1500P	2	
C6311		ECQB1H682JF	P.CAPACITOR 50V 6800P	1	
C6312		ECA1HXK330	E.CAPACITOR 50V 33U	1	
C6313		ECA1HXK220F	E.CAPACITOR 50V 22U	1	
C6314		ECA1EXLV101X	E.CAPACITOR 25V 100P	1	
C6315		ECUX1H103KBV	C.CAPACITOR CH 50V 0.01U	1	
C6316		ECA1HXK220F	E.CAPACITOR 50V 22U	1	
C6317,18		ECUX1H103KBV	C.CAPACITOR CH 50V 0.01U	2	
C6319		ECA1HXK330	E.CAPACITOR 50V 33U	1	
C6320		VCF2JAB222JE	P.CAPACITOR V	1	
C6321		ECA1HXS010	E.CAPACITOR 50V 1U	1	
C6322		ECA1HXKN010	E.CAPACITOR 50V 1U	1	
C6323,24		ECUX1H103KBV	C.CAPACITOR CH 50V 0.01U	2	
C6325		ECA1HXK330	E.CAPACITOR 50V 33U	1	
C6326		VCF2JAB182JE	P.CAPACITOR V	1	
C6327		ECUM1E104KBN	C.CAPACITOR 25V 0.1U	1	
C6328		ECA1HXS010	E.CAPACITOR 50V 1U	1	
C6329		ECA1HXKN010	E.CAPACITOR 50V 1U	1	
C6330,31		ECUX1H103KBV	C.CAPACITOR CH 50V 0.01U	2	
C6332		ECA1HXK330	E.CAPACITOR 50V 33U	1	
C6333		VCF2JAB222JE	P.CAPACITOR V	1	
C6334		ECUM1E104KBN	C.CAPACITOR 25V 0.1U	1	
C6335		ECA1HXS010	E.CAPACITOR 50V 1U	1	
C6336		ECA1HXKN010	E.CAPACITOR 50V 1U	1	
C6337,38		ECUX1H103KBV	C.CAPACITOR CH 50V 0.01U	2	
C6339		ECA1HXK330	E.CAPACITOR 50V 33U	1	
C6340		VCF2JAB222JE	P.CAPACITOR V	1	
C6341		ECUM1E104KBN	C.CAPACITOR 25V 0.1U	1	
C6342		ECA1HXS010	E.CAPACITOR 50V 1U	1	
C6343		ECA1HXKN010	E.CAPACITOR 50V 1U	1	
C6344,45		ECUX1H103KBV	C.CAPACITOR CH 50V 0.01U	2	
C6346		ECA1HXK330	E.CAPACITOR 50V 33U	1	
C6347		ECCD2H181J	C.CAPACITOR 500V 180P	1	
C6348		ECCD2H680J	C.CAPACITOR 500V 68P	1	
C6349		ECA1HXS010	E.CAPACITOR 50V 1U	1	
C6350		ECA1HXKN010	E.CAPACITOR 50V 1U	1	
C6351,52		ECUX1H103KBV	C.CAPACITOR CH 50V 0.01U	2	
C6353		ECA1HXK330	E.CAPACITOR 50V 33U	1	
C6354		ECCD2H181J	C.CAPACITOR 500V 180P	1	
C6355		ECCD2H271J	C.CAPACITOR 500V 270P	1	
C6356		ECA1HXS010	E.CAPACITOR 50V 1U	1	

Ref.No.		Part No.	Part Name & Description	Pcs	Remarks
C6357		ECUM1E104KBN	C.CAPACITOR 25V 0.1U	1	
C6358		ECA1HXS010	E.CAPACITOR 50V 1U	1	
C6359		ECUM1E104KBN	C.CAPACITOR 25V 0.1U	1	
C6361,62		ECA1HXS010	E.CAPACITOR 50V 1U	2	
C6363		ECA1HXS100	E.CAPACITOR 50V 10U	1	
C6364		ECA1HXS2R2	E.CAPACITOR 50V 2.2U	1	
C6365		ECA1CXLV221X	E.CAPACITOR 16V 220P	1	
C6366-68		ECUX1C104ZFV	C.CAPACITOR CH 16V 0.1U	3	
C6369		ECA1CXK101F	.CAPACITOR V	1	
C6370		ECA1CXLV221X	E.CAPACITOR 16V 220P	1	
C6371-73		ECUX1C104ZFV	C.CAPACITOR CH 16V 0.1U	3	
C6374		ECA1CXK101F	.CAPACITOR V	1	
C6375,76		ECA1HXS100	E.CAPACITOR 50V 10U	2	
C6377-80		ECA1CXKN100	E.CAPACITOR 16V 10U	4	
C6381,82		ECA1CXS470	E.CAPACITOR 16V 47U	2	
C6383		ECUX1H220JCV	C.CAPACITOR CH 50V 22P	1	
C6384,85		ECA1CXKN100	E.CAPACITOR 16V 10U	2	
C6386		ECA1EXKN220	E.CAPACITOR 25V 22U	1	
C6387		ECUX1H103KBV	C.CAPACITOR CH 50V 0.01U	1	
C6388		ECUX1H472KBV	C.CAPACITOR 50V 4700P	1	
C6390		ECA1CXKN100	E.CAPACITOR 16V 10U	1	
C6391		ECUX1H102KBV	C.CAPACITOR 50V 1000P	1	
C6392		ECA1CXS470	E.CAPACITOR 16V 47U	1	
C6393		ECUX1H181JCV	C.CAPACITOR 50V 180P	1	
C6394		ECUX1H820JCV	C.CAPACITOR CH 50V 82P	1	
C6395,96		ECA1CXK101F	.CAPACITOR V	2	
C6397		ECA1CXLV221X	E.CAPACITOR 16V 220P	1	
C6398		ECUX1H470JCV	C.CAPACITOR 50V 47P	1	
C6399		ECQB1H473JF	P.CAPACITOR 50V 0.047U	1	
C6400		ECA1CXKN100	E.CAPACITOR 16V 10U	1	
C6401		ECUX1H562KBV	C.CAPACITOR 50V 5600P	1	
C6402		ECA1CXKN100	E.CAPACITOR 16V 10U	1	
C6403		ECUX1H220JCV	C.CAPACITOR CH 50V 22P	1	
C6404		ECA1CXKN100	E.CAPACITOR 16V 10U	1	
C6405		ECA1EXKN220	E.CAPACITOR 25V 22U	1	
C6406		ECUX1H181JCV	C.CAPACITOR 50V 180P	1	
C6407		ECUX1H820JCV	C.CAPACITOR CH 50V 82P	1	
C6408		ECUX1H470JCV	C.CAPACITOR 50V 47P	1	
C6409		ECQB1H473JF	P.CAPACITOR 50V 0.047U	1	
C6410		ECA1CXKN100	E.CAPACITOR 16V 10U	1	
C6411		ECUX1H562KBV	C.CAPACITOR 50V 5600P	1	
C6412,13		ECA1CXK101F	.CAPACITOR V	2	
C6414		ECA1CXKN100	E.CAPACITOR 16V 10U	1	
C6415		ECA1HXS100	E.CAPACITOR 50V 10U	1	
C6416		ECUX1H153KBV	C.CAPACITOR CH 50V 0.015U	1	
C6420,21		ECUX1H103ZFV	C.CAPACITOR CH 50V 0.01U	2	
C6422		ECA1EXKN220	E.CAPACITOR 25V 22U	1	
C6423		ECUX1H470JCV	C.CAPACITOR 50V 47P	1	
C6424,25		ECA1CXS100	E.CAPACITOR 16V 10U	2	
C6426		ECA1CXLV221X	E.CAPACITOR 16V 220P	1	
C6427,28		ECUX1H103ZFV	C.CAPACITOR CH 50V 0.01U	2	
C6429		ECUX1H470JCV	C.CAPACITOR 50V 47P	1	
C6430,31		ECA1CXS100	E.CAPACITOR 16V 10U	2	
C6432		ECA1CXLV221X	E.CAPACITOR 16V 220P	1	
C6435,36		ECUX1H103ZFV	C.CAPACITOR CH 50V 0.01U	2	
C6437		ECA1CXK101F	.CAPACITOR V	1	
C6440,41		ECUX1H103ZFV	C.CAPACITOR CH 50V 0.01U	2	
C6442		ECA1CXK101F	.CAPACITOR V	1	
C6451		ECA1HXS010	E.CAPACITOR 50V 1U	1	
C6452		ECA1HXS2R2	E.CAPACITOR 50V 2.2U	1	
C6453-55		ECA1VXKN4R7	E.CAPACITOR 35V 4.7U	3	
C6456		ECA1HXS100	E.CAPACITOR 50V 10U	1	
C6457		ECA1HXK330	E.CAPACITOR 50V 33U	1	
C6458		ECUX1H560JCV	C.CAPACITOR 50V 56P	1	
C6459		ECUX1H102KBV	C.CAPACITOR 50V 1000P	1	
C6460		ECA1CXLV221X	E.CAPACITOR 16V 220P	1	
C6461		ECUX1H103KBV	C.CAPACITOR CH 50V 0.01U	1	
C6462		ECA1HXKN010	E.CAPACITOR 50V 1U	1	
C6463		ECA1CXK101F	.CAPACITOR V	1	
C6464		ECUM1E104KBN	C.CAPACITOR 25V 0.1U	1	
C6465		ECA1HXS100	E.CAPACITOR 50V 10U	1	
C6466		ECUX1H682KBV	C.CAPACITOR CH 50V 6800P	1	
C6467		ECUX1H822KBV	C.CAPACITOR CH 50V 8200P	1	
C6468,69		ECA1CXS470	E.CAPACITOR 16V 47U	2	
C6470		ECA1EXKN220	E.CAPACITOR 25V 22U	1	

Ref.No.		Part No.	Part Name & Description	Pcs	Remarks
C6471,72		ECA1CXS470	E.CAPACITOR 16V 47U	2	
C6473		ECA1VXKN4R7	E.CAPACITOR 35V 4.7U	1	
C6474		ECUX1H470JCV	C.CAPACITOR 50V 47P	1	
C6475,76		ECA1CXS470	E.CAPACITOR 16V 47U	2	
C6477		ECA1EXKN220	E.CAPACITOR 25V 22U	1	
C6478		ECA1HXS100	E.CAPACITOR 50V 10U	1	
C6479		ECA1HXK330	E.CAPACITOR 50V 33U	1	
C6480		ECUX1H560JCV	C.CAPACITOR 50V 56P	1	
C6481		ECUX1H102KBV	C.CAPACITOR 50V 1000P	1	
C6482		ECA1CXLV221X	E.CAPACITOR 16V 220P	1	
C6483		ECUX1H103KBV	C.CAPACITOR CH 50V 0.01U	1	
C6484		ECA1HXKN010	E.CAPACITOR 50V 1U	1	
C6485		ECA1CXK101F	.CAPACITOR V	1	
C6486		ECUM1E104KBN	C.CAPACITOR 25V 0.1U	1	
C6487		ECA1HXS100	E.CAPACITOR 50V 10U	1	
C6488		ECUX1H682KBV	C.CAPACITOR CH 50V 6800P	1	
C6489		ECUX1H822KBV	C.CAPACITOR CH 50V 8200P	1	
C6490,91		ECA1CXS470	E.CAPACITOR 16V 47U	2	
C6492		ECA1EXKN220	E.CAPACITOR 25V 22U	1	
C6493,94		ECA1CXS470	E.CAPACITOR 16V 47U	2	
C6495		ECA1VXKN4R7	E.CAPACITOR 35V 4.7U	1	
C6498,99		ECUX1H103ZFV	C.CAPACITOR CH 50V 0.01U	2	
C6500		ECA1CXK101F	.CAPACITOR V	1	
C6503,04		ECUX1H103ZFV	C.CAPACITOR CH 50V 0.01U	2	
C6505		ECA1CXK101F	.CAPACITOR V	1	
D6001-04		OA95	DIODE	4	
D6005		MA153	DIODE	1	
D6005-09		OA95	DIODE	5	
D6010		MA157	DIODE	1	
D6010		OA95	DIODE	1	
D6011		MA157	DIODE	1	
D6301		MA3100	DIODE	1	
D6302		MA151K	DIODE	1	
D6303		MA157	DIODE	1	
D6304,05		MA151WK	DIODE	2	
D6306-12		MA151K	DIODE	7	
D6313-15		MA151WK	DIODE	3	
D6316-19		MA157	DIODE	4	
D6320-22		MA151K	DIODE	3	
D6323,24		MA151WK	DIODE	2	
D6325-27		MA157	DIODE	3	
FL6001,02		VLF0928	FILTER	2	
FL6003-05		VLF0931	COIL	3	
FL6301		VLF0829	FILTER	1	
FL6302		VLQ0190	COIL 4.7MH	1	
FL6303		VLQ0402	COIL	1	
FL6304,05		EIR7QH007Q	FILTER	2	
FL6306		VLF0829	FILTER	1	
FL6307,08		VLF0931	COIL	2	
FL6311		VLQ0402	COIL	1	
FL6312,13		EIR7QG010B	IF TRANSFORMER	2	
IC6001		UPC451G2	IC	1	
IC6001		UPD78C10GF	IC	1	
IC6002		UPC339G2	IC	1	
IC6003		M27C256-15F1	IC	1	
IC6003		NJM4558M	IC	1	
IC6004		MC74HC573AF	IC	1	
IC6004		NJM2903M	IC	1	
IC6005		AN78N12	IC	1	
IC6005		MC74HC138AF	IC	1	
IC6006		AN79N12	IC	1	
IC6007		NJM78L05UA	IC	1	
IC6008-11		NJM4558M	IC	4	
IC6012		MC74HC74AF	IC	1	
IC6012		MN8305S	IC	1	
IC6013		MC10H125M	IC	1	

Ref.No.	Part No.	Part Name & Description	Pcs	Remarks
IC6013	MC74HC00AF	IC	1	
IC6014	MCM514256AP8	IC	1	
IC6014	MC74HC32AF	IC	1	
IC6015	MB621926	IC	1	
IC6015	MN51040VPI	IC	1	
IC6016	MC74HC138AF	IC	1	
IC6016	MC74HC4053F	IC	1	
IC6017	MC74HC541F	IC	1	
IC6018	MC74HC4053F	IC	1	
IC6019	UPC4741G2	IC	1	
IC6020	UPC319G2	IC	1	
IC6021	NJM2068MD	IC	1	
IC6022	NJM4560MD	IC	1	
IC6023	MB8421-90LPF	IC	1	
IC6024	MB89363BPF	IC	1	
IC6025	MC74HC138AF	IC	1	
IC6026	TC7SU04F	IC	1	
IC6027-29	MC74HC4050F	IC	3	
IC6030	NJM78L05UA	IC	1	
IC6031	NJM79L05UA	IC	1	
IC6032	NJM2904M	IC	1	
IC6033	MM74HC221AMX	IC	1	
IC6034	MC74HC04AF	IC	1	
IC6035	MC74HC4053F	IC	1	
IC6036,37	MC74HC08AF	IC	2	
IC6038,39	UPD71054GB	IC	2	
IC6041	MC74HC32AF	IC	1	
IC6042	TL3171LP	IC	1	
IC6043	NJM78L12UA	IC	1	
IC6044	NJM79L12UA	IC	1	
IC6045	MC74HC4053F	IC	1	
IC6301	MC14011BF	IC	1	
IC6302	MC14538BF	IC	1	
IC6303,04	NJM4580ED	IC	2	
IC6305	NJM4558M	IC	1	
IC6306	M5206P	IC	1	
IC6307,08	NJM4558M	IC	2	
IC6309	AN6558S	IC	1	
IC6310	NJM4558M	IC	1	
IC6311	AN6558S	IC	1	
IC6312	NJM4558M	IC	1	
IC6313	MN6631A	IC	1	
IC6314	AN78N12	IC	1	
IC6315	AN79N12	IC	1	
IC6316	NJM4558M	IC	1	
IC6317	NJM2043MD	IC	1	
IC6318	AN78N12	IC	1	
IC6319	AN79N12	IC	1	
IC6320	NJM4558M	IC	1	
IC6321	BA301	IC	1	
IC6322,23	LM318PS	IC	2	
IC6324	MN6631A	IC	1	
IC6325	LM318PS	IC	1	
IC6326	BA301	IC	1	
IC6327,28	LM318PS	IC	2	
IC6329	AN78N12	IC	1	
IC6330	AN79N12	IC	1	
ICS3	VJS2336A028	CONNECTOR (FEMALE)	1	
L6010,11	VLQ0576	COIL	2	
L6301-07	VLQEL06F470K	COIL 47UH	7	
P005,06	VJP3454B096	CONNECTOR (MALE)	2	
P6101	VJP2983A020	CONNECTOR (MALE)	1	
P6101	VJS2983A020	CONNECTOR (FEMALE)	1	
P6102	VJP2983A010	CONNECTOR (MALE)	1	
P6102	VJS2983A010	CONNECTOR (FEMALE)	1	
P6103	VJP2983A007	CONNECTOR (MALE)	1	
P6103	VJS2983A007	CONNECTOR (FEMALE)	1	
P6301	VJP1230T	CONNECTOR (MALE) 3P	1	
P6302	VJP1230G	CONNECTOR (MALE) 3P	1	

Ref.No.	Part No.	Part Name & Description	Pcs	Remarks
P6303	VJP1230R	CONNECTOR (MALE) 3P	1	
P6304	VJP1230T	CONNECTOR (MALE) 3P	1	
P6305	VJP1230G	CONNECTOR (MALE) 3P	1	
P6306	VJP1230R	CONNECTOR (MALE) 3P	1	
Q6001-05	2SD601-R	TRANSISTOR CHIP	5	(Q,R)
Q6006	UN2213	TRANSISTOR-RESISTOR	1	
Q6010	2SK198	TRANSISTOR CHIP	1	(Q,R,S)
Q6011	UN2213	TRANSISTOR-RESISTOR	1	
Q6020-39	UN2213	TRANSISTOR-RESISTOR	20	
Q6301	2SC1847-R	TRANSISTOR	1	(Q,R)
Q6302	2SD602-R	TRANSISTOR	1	
Q6303	2SB710-R	TRANSISTOR CHIP	1	(R)
Q6304	2SD602-R	TRANSISTOR	1	
Q6305	UN2213	TRANSISTOR-RESISTOR	1	
Q6306-08	2SC1318-QR	TRANSISTOR	3	
Q6309,10	UN2213	TRANSISTOR-RESISTOR	2	
Q6311	2SB710-R	TRANSISTOR CHIP	1	(R)
Q6312	UN2213	TRANSISTOR-RESISTOR	1	
Q6313	2SB710-R	TRANSISTOR CHIP	1	(R)
Q6314,15	2SD1994A-QR	TRANSISTOR	2	
Q6316	2SD602-R	TRANSISTOR	1	
Q6317	2SB710-R	TRANSISTOR CHIP	1	(R)
Q6318,19	2SD1994A-QR	TRANSISTOR	2	
Q6320	2SD602-R	TRANSISTOR	1	
Q6321	2SB710-R	TRANSISTOR CHIP	1	(R)
Q6322,23	2SD1328-R	TRANSISTOR CHIP	2	(Q,R)
Q6324	2SB710-R	TRANSISTOR CHIP	1	(R)
Q6325,26	2SD1994A-QR	TRANSISTOR	2	
Q6327	2SD602-R	TRANSISTOR	1	
Q6328	2SB710-R	TRANSISTOR CHIP	1	(R)
Q6329,30	2SD1328-R	TRANSISTOR CHIP	2	(Q,R)
Q6331	2SB710-R	TRANSISTOR CHIP	1	(R)
Q6332,33	2SD1994A-QR	TRANSISTOR	2	
Q6334	2SD602-R	TRANSISTOR	1	
Q6335	2SB710-R	TRANSISTOR CHIP	1	(R)
Q6336,37	2SD1328-R	TRANSISTOR CHIP	2	(Q,R)
Q6338	2SB710-R	TRANSISTOR CHIP	1	(R)
Q6339,40	2SD1994A-QR	TRANSISTOR	2	
Q6341	2SD602-R	TRANSISTOR	1	
Q6342	2SB710-R	TRANSISTOR CHIP	1	(R)
Q6343,44	2SD1994A-QR	TRANSISTOR	2	
Q6345	2SD602-R	TRANSISTOR	1	
Q6346-48	UN2213	TRANSISTOR-RESISTOR	3	
Q6349,50	2SD602-R	TRANSISTOR	2	
Q6351	UN2213	TRANSISTOR-RESISTOR	1	
Q6352	2SD602-R	TRANSISTOR	1	
Q6353	UN2113	TRANSISTOR-RESISTOR	1	
Q6354,55	UN2213	TRANSISTOR-RESISTOR	2	
Q6356-58	2SD602-R	TRANSISTOR	3	
Q6359,60	2SD1149-R	TRANSISTOR	2	
Q6361	2SA1018-R	TRANSISTOR	1	(R)
Q6363-66	UN2213	TRANSISTOR-RESISTOR	4	
Q6367	2SD602-R	TRANSISTOR	1	
Q6368	2SB710-R	TRANSISTOR CHIP	1	(R)
Q6369	UN2213	TRANSISTOR-RESISTOR	1	
Q6370	2SD602-R	TRANSISTOR	1	
Q6371	2SD1994A-QR	TRANSISTOR	1	
Q6372	2SB1322A-QR	TRANSISTOR	1	
Q6373	2SD1994A-QR	TRANSISTOR	1	
Q6374	2SB1322A-QR	TRANSISTOR	1	
Q6375-77	2SD602-R	TRANSISTOR	3	
Q6378,79	UN2213	TRANSISTOR-RESISTOR	2	
Q6380	2SD602-R	TRANSISTOR	1	
Q6381,82	2SD1149-R	TRANSISTOR	2	
Q6383	2SA1018-R	TRANSISTOR	1	(R)
Q6384,85	2SD602-R	TRANSISTOR	2	
Q6391	UN2213	TRANSISTOR-RESISTOR	1	
Q6392	2SD602-R	TRANSISTOR	1	
Q6400	UN2213	TRANSISTOR-RESISTOR	1	

Ref.No.		Part No.	Part Name & Description	Pcs	Remarks
			RESISTORS		
R6001		ERJ6GEYJ103	M.RESISTOR CH 1/10W 10K	1	
R6002		ERJ6GEYJ272	M.RESISTOR CH 1/10W 2.7K	1	
R6003		ERJ6GEYJ153	M.RESISTOR CH 1/10W 15K	1	
R6004		ERJ6GEYJ221	M.RESISTOR CH 1/10W 220	1	
R6005		ERJ6GEYJ103	M.RESISTOR CH 1/10W 10K	1	
R6006		ERJ6GEYJ153	M.RESISTOR CH 1/10W 15K	1	
R6007		ERJ6GEYJ562	M.RESISTOR CH 1/10W 5.6K	1	
R6008		ERJ6GEYJ103	M.RESISTOR CH 1/10W 10K	1	
R6009		ERJ6GEYJ272	M.RESISTOR CH 1/10W 2.7K	1	
R6010		ERJ6GEYJ153	M.RESISTOR CH 1/10W 15K	1	
R6011		ERJ6GEYJ221	M.RESISTOR CH 1/10W 220	1	
R6012		ERJ6GEYJ103	M.RESISTOR CH 1/10W 10K	1	
R6013		ERJ6GEYJ153	M.RESISTOR CH 1/10W 15K	1	
R6014		ERJ6GEYJ562	M.RESISTOR CH 1/10W 5.6K	1	
R6015		ERJ6GEYJ103	M.RESISTOR CH 1/10W 10K	1	
R6016		ERJ6GEYJ272	M.RESISTOR CH 1/10W 2.7K	1	
R6017		ERJ6GEYJ153	M.RESISTOR CH 1/10W 15K	1	
R6018		ERJ6GEYJ221	M.RESISTOR CH 1/10W 220	1	
R6019		ERJ6GEYJ103	M.RESISTOR CH 1/10W 10K	1	
R6020		ERJ6GEYJ153	M.RESISTOR CH 1/10W 15K	1	
R6021		ERJ6GEYJ562	M.RESISTOR CH 1/10W 5.6K	1	
R6022		ERJ6GEYJ103	M.RESISTOR CH 1/10W 10K	1	
R6023		ERJ3GEYJ103	M.RESISTOR CH 1/16W 10K	1	
R6023		ERJ6GEYJ272	M.RESISTOR CH 1/10W 2.7K	1	
R6024		ERJ3GEYJ103	M.RESISTOR CH 1/16W 10K	1	
R6024		ERJ6GEYJ153	M.RESISTOR CH 1/10W 15K	1	
R6025		ERJ3GEYJ473	M.RESISTOR CH 1/16W 47K	1	
R6025		ERJ6GEYJ221	M.RESISTOR CH 1/10W 220	1	
R6026		ERJ3GEYJ473	M.RESISTOR CH 1/16W 47K	1	
R6026		ERJ6GEYJ103	M.RESISTOR CH 1/10W 10K	1	
R6027		ERJ3GEYJ562	M.RESISTOR CH 1/16W 5.6K	1	
R6027		ERJ6GEYJ153	M.RESISTOR CH 1/10W 15K	1	
R6028		ERJ3GEYJ562	M.RESISTOR CH 1/16W 5.6K	1	
R6028		ERJ6GEYJ562	M.RESISTOR CH 1/10W 5.6K	1	
R6029		ERJ3GEYJ104	M.RESISTOR CH 1/16W 100K	1	
R6029		ERJ6GEYJ103	M.RESISTOR CH 1/10W 10K	1	
R6030		ERJ6GEYJ272	M.RESISTOR CH 1/10W 2.7K	1	
R6031		ERJ6GEYJ153	M.RESISTOR CH 1/10W 15K	1	
R6032		ERJ6GEYJ221	M.RESISTOR CH 1/10W 220	1	
R6033		ERJ6GEYJ103	M.RESISTOR CH 1/10W 10K	1	
R6034		ERJ6GEYJ153	M.RESISTOR CH 1/10W 15K	1	
R6035		ERJ6GEYJ562	M.RESISTOR CH 1/10W 5.6K	1	
R6036		ERJ6GEYJ153	M.RESISTOR CH 1/10W 15K	1	
R6037		ERJ6GEYJ102	M.RESISTOR CH 1/10W 1K	1	
R6038		ERJ3GEYJ102	M.RESISTOR CH 1/16W 1K	1	
R6038		ERJ6GEYJ223	M.RESISTOR CH 1/10W 22K	1	
R6039		ERJ3GEYJ104	M.RESISTOR CH 1/16W 100K	1	
R6039		ERJ6GEYJ222	M.RESISTOR CH 1/10W 2.2K	1	
R6040		ERJ6GEYJ470	M.RESISTOR CH 1/10W 47	1	
R6041		ERJ6GEYJ105	M.RESISTOR CH 1/10W 1M	1	
R6041		VRE0034E332	M.RESISTOR CH 1/10W 3.3K	1	
R6042		ERJ6GEY0R00	M.RESISTOR CH 1/10W 0	1	
R6042		VRE0034E332	M.RESISTOR CH 1/10W 3.3K	1	
R6043		ERJ6GEYJ123	M.RESISTOR CH 1/10W 12K	1	
R6043		VRE0034E562	M.RESISTOR CH 1/10W 5.6K	1	
R6044		ERJ6GEYJ393	M.RESISTOR CH 1/10W 39K	1	
R6044		VRE0034E562	M.RESISTOR CH 1/10W 5.6K	1	
R6045		ERJ6GEYJ822	M.RESISTOR CH 1/10W 8.2K	1	
R6045		VRE0034E332	M.RESISTOR CH 1/10W 3.3K	1	
R6046		ERJ6GEYJ152	M.RESISTOR CH 1/10W 1.5K	1	
R6046		ERJ6GEYJ470	M.RESISTOR CH 1/10W 47	1	
R6047		ERJ6GEYJ823	M.RESISTOR CH 1/10W 82K	1	
R6047		VRE0034E562	M.RESISTOR CH 1/10W 5.6K	1	
R6048		ERJ6GEYJ183	M.RESISTOR CH 1/10W 18K	1	
R6048		VRE0034E332	M.RESISTOR CH 1/10W 3.3K	1	
R6049		ERJ6GEYJ823	M.RESISTOR CH 1/10W 82K	1	
R6049		VRE0034E103	M.RESISTOR CH 1/10W 10K	1	
R6050		ERJ6GEYJ105	M.RESISTOR CH 1/10W 1M	1	
R6050		ERJ6GEYJ823	M.RESISTOR CH 1/10W 82K	1	
R6051		ERJ6GEYJ105	M.RESISTOR CH 1/10W 1M	1	
R6051		ERJ6GEYJ105	M.RESISTOR CH 1/10W 1M	1	
R6052		ERJ6GEY0R00	M.RESISTOR CH 1/10W 0	1	
R6052		VRE0034E103	M.RESISTOR CH 1/10W 10K	1	
R6053		ERJ6GEYJ123	M.RESISTOR CH 1/10W 12K	1	

Ref.No.		Part No.	Part Name & Description	Pcs	Remarks
R6053		VRE0034E683	M.RESISTOR CH 1/10W 68K	1	
R6054		ERJ3GEYJ223	M.RESISTOR CH 1/16W 22K	1	
R6054		ERJ6GEYJ393	M.RESISTOR CH 1/10W 39K	1	
R6055		ERJ3GEYJ394	M.RESISTOR CH 1/16W 390K	1	
R6055		ERJ6GEYJ822	M.RESISTOR CH 1/10W 8.2K	1	
R6056		ERJ6GEYJ152	M.RESISTOR CH 1/10W 1.5K	1	
R6056		VRE0034E333	M.RESISTOR CH 1/10W 33K	1	
R6057		ERJ3GEYJ223	M.RESISTOR CH 1/16W 22K	1	
R6057		ERJ6GEYJ823	M.RESISTOR CH 1/10W 82K	1	
R6058		ERJ3GEYJ223	M.RESISTOR CH 1/16W 22K	1	
R6058		ERJ6GEYJ183	M.RESISTOR CH 1/10W 18K	1	
R6059		ERJ6GEYJ102	M.RESISTOR CH 1/10W 1K	1	
R6059		ERJ6GEYJ823	M.RESISTOR CH 1/10W 82K	1	
R6060		ERJ6GEYJ102	M.RESISTOR CH 1/10W 1K	1	
R6060		ERJ6GEYJ823	M.RESISTOR CH 1/10W 82K	1	
R6061		ERJ3GEYJ104	M.RESISTOR CH 1/16W 100K	1	
R6061		ERJ6GEYJ223	M.RESISTOR CH 1/10W 22K	1	
R6062		ERJ3GEYJ102	M.RESISTOR CH 1/16W 1K	1	
R6062		ERJ6GEYJ472	M.RESISTOR CH 1/10W 4.7K	1	
R6063		ERJ3GEYJ103	M.RESISTOR CH 1/16W 10K	1	
R6063		ERJ6GEYJ472	M.RESISTOR CH 1/10W 4.7K	1	
R6064		ERJ3GEYJ103	M.RESISTOR CH 1/16W 10K	1	
R6064		ERJ6GEYJ223	M.RESISTOR CH 1/10W 22K	1	
R6065		ERJ3GEYJ824	M.RESISTOR CH 1/16W 820K	1	
R6065		ERJ6GEYJ472	M.RESISTOR CH 1/10W 4.7K	1	
R6066		ERJ3GEYJ104	M.RESISTOR CH 1/16W 100K	1	
R6066		ERJ6GEYJ472	M.RESISTOR CH 1/10W 4.7K	1	
R6067		ERJ3GEYJ473	M.RESISTOR CH 1/16W 47K	1	
R6067		ERJ6GEYJ101	M.RESISTOR CH 1/10W 100	1	
R6068		ERJ3GEYJ103	M.RESISTOR CH 1/16W 10K	1	
R6069,70		ERJ6GEYJ222	M.RESISTOR CH 1/10W 2.2K	2	
R6071		ERJ6GEYJ103	M.RESISTOR CH 1/10W 10K	1	
R6071		ERJ6GEYJ222	M.RESISTOR CH 1/10W 2.2K	1	
R6072		ERJ6GEYJ103	M.RESISTOR CH 1/10W 10K	1	
R6072		ERJ6GEYJ222	M.RESISTOR CH 1/10W 2.2K	1	
R6073		ERJ6GEYJ102	M.RESISTOR CH 1/10W 1K	1	
R6073		ERJ6GEYJ103	M.RESISTOR CH 1/10W 10K	1	
R6074		ERJ6GEYJ102	M.RESISTOR CH 1/10W 1K	1	
R6074		ERJ6GEYJ103	M.RESISTOR CH 1/10W 10K	1	
R6075,76		ERJ3GEYJ473	M.RESISTOR CH 1/16W 47K	2	
R6077		VRE0034E103	M.RESISTOR CH 1/10W 10K	1	
R6078-82		ERJ3GEYJ104	M.RESISTOR CH 1/16W 100K	5	
R6083		ERJ6GEYJ105	M.RESISTOR CH 1/10W 1M	1	
R6084		ERJ3GEYJ103	M.RESISTOR CH 1/16W 10K	1	
R6094		VRE0034E562	M.RESISTOR CH 1/10W 5.6K	1	
R6095		VRE0034E561	M.RESISTOR CH 1/10W 560	1	
R6098-02		ERJ3GEYJ103	M.RESISTOR CH 1/16W 10K	5	
R6110		ERJ6GEYJ241	M.RESISTOR CH 1/10W 240	1	
R6111,12		ERJ3GEYJ104	M.RESISTOR CH 1/16W 100K	2	
R6113		ERJ3GEYJ473	M.RESISTOR CH 1/16W 47K	1	
R6200-02		ERJ3GEYJ103	M.RESISTOR CH 1/16W 10K	3	
R6205		ERJ6GEY0R00	M.RESISTOR CH 1/10W 0	1	
R6207		ERJ6GEY0R00	M.RESISTOR CH 1/10W 0	1	
R6209		ERJ6GEY0R00	M.RESISTOR CH 1/10W 0	1	
R6212,13		ERJ6GEY0R00	M.RESISTOR CH 1/10W 0	2	
R6215		ERJ6GEY0R00	M.RESISTOR CH 1/10W 0	1	
R6217		ERJ6GEY0R00	M.RESISTOR CH 1/10W 0	1	
R6220,21		ERJ6GEY0R00	M.RESISTOR CH 1/10W 0	2	
R6301		ERJ3GEYJ331	M.RESISTOR CH 1/16W 330	1	
R6302		ERJ3GEYJ223	M.RESISTOR CH 1/16W 22K	1	
R6303		ERJ3GEYJ472	M.RESISTOR CH 1/16W 4.7K	1	
R6304		ERJ3GEYJ562	M.RESISTOR CH 1/16W 5.6K	1	
R6305		ERJ3GEYJ332	M.RESISTOR CH 1/16W 3.3K	1	
R6306		ERJ3GEYJ103	M.RESISTOR CH 1/16W 10K	1	
R6307		VRE0034E333	M.RESISTOR CH 1/10W 33K	1	
R6308		ERJ3GEYJ101	M.RESISTOR CH 1/16W 100	1	
R6309,10		ERJ3GEYJ394	M.RESISTOR CH 1/16W 390K	2	
R6311		ERJ14YJ220	M.RESISTOR 1/4W 22	1	
R6312-14		ERJ3GEYJ103	M.RESISTOR CH 1/16W 10K	3	
R6315,16		ERJ3GEYJ223	M.RESISTOR CH 1/16W 22K	2	
R6317		ERJ3GEYJ274	M.RESISTOR CH 1/16W 270K	1	
R6318-20		ERJ3GEYJ103	M.RESISTOR CH 1/16W 10K	3	
R6321,22		ERJ3GEYJ683	M.RESISTOR CH 1/16W 68K	2	
R6323		ERJ6GEYJ222	M.RESISTOR CH 1/10W 2.2K	1	
R6324		ERJ3GEYJ103	M.RESISTOR CH 1/16W 10K	1	

Ref.No.		Part No.	Part Name & Description	Pcs	Remarks
R6325		ERJ3GEYJ153	M.RESISTOR CH 1/16W 15K	1	
R6326		ERJ3GEYJ332	M.RESISTOR CH 1/16W 3.3K	1	
R6327,28		ERJ3GEYJ220	M.RESISTOR CH 1/16W 22	2	
R6329,30		ERJ3GEYJ224	M.RESISTOR CH 1/16W 220K	2	
R6331		ERJ3GEYJ103	M.RESISTOR CH 1/16W 10K	1	
R6332		ERJ14YJ100	M.RESISTOR 1/4W 10	1	
R6333		ERJ6GEYK1R0	M.RESISTOR CH1/10W 1.0	1	
R6334		ERJ6GEYJ222	M.RESISTOR CH 1/10W 2.2K	1	
R6335		ERJ3GEYJ103	M.RESISTOR CH 1/16W 10K	1	
R6336		ERJ3GEYJ682	M.RESISTOR CH 1/16W 6.8K	1	
R6337		ERJ3GEYJ153	M.RESISTOR CH 1/16W 15K	1	
R6338		ERJ3GEYJ272	M.RESISTOR CH 1/16W 2.7K	1	
R6339,40		ERJ3GEYJ220	M.RESISTOR CH 1/16W 22	2	
R6341,42		ERJ3GEYJ104	M.RESISTOR CH 1/16W 100K	2	
R6343		ERJ3GEYJ103	M.RESISTOR CH 1/16W 10K	1	
R6344		ERJ3GEYJ472	M.RESISTOR CH 1/16W 4.7K	1	
R6345		ERJ14YJ100	M.RESISTOR 1/4W 10	1	
R6346		ERJ3GEYJ102	M.RESISTOR CH 1/16W 1K	1	
R6347,48		ERJ3GEYJ222	M.RESISTOR CH 1/16W 2.2K	2	
R6349		ERJ6GEYK1R0	M.RESISTOR CH1/10W 1.0	1	
R6350		ERJ6GEYJ222	M.RESISTOR CH 1/10W 2.2K	1	
R6351		ERJ3GEYJ103	M.RESISTOR CH 1/16W 10K	1	
R6352		ERJ3GEYJ682	M.RESISTOR CH 1/16W 6.8K	1	
R6353		ERJ3GEYJ153	M.RESISTOR CH 1/16W 15K	1	
R6354		ERJ3GEYJ272	M.RESISTOR CH 1/16W 2.7K	1	
R6355,56		ERJ3GEYJ220	M.RESISTOR CH 1/16W 22	2	
R6357,58		ERJ3GEYJ104	M.RESISTOR CH 1/16W 100K	2	
R6359		ERJ3GEYJ103	M.RESISTOR CH 1/16W 10K	1	
R6360		ERJ3GEYJ472	M.RESISTOR CH 1/16W 4.7K	1	
R6361		ERJ14YJ100	M.RESISTOR 1/4W 10	1	
R6362		ERJ3GEYJ102	M.RESISTOR CH 1/16W 1K	1	
R6363,64		ERJ3GEYJ222	M.RESISTOR CH 1/16W 2.2K	2	
R6365		ERJ6GEYK1R0	M.RESISTOR CH1/10W 1.0	1	
R6366		ERJ6GEYJ222	M.RESISTOR CH 1/10W 2.2K	1	
R6367		ERJ3GEYJ103	M.RESISTOR CH 1/16W 10K	1	
R6368		ERJ3GEYJ682	M.RESISTOR CH 1/16W 6.8K	1	
R6369		ERJ3GEYJ153	M.RESISTOR CH 1/16W 15K	1	
R6370		ERJ3GEYJ272	M.RESISTOR CH 1/16W 2.7K	1	
R6371,72		ERJ3GEYJ220	M.RESISTOR CH 1/16W 22	2	
R6373,74		ERJ3GEYJ104	M.RESISTOR CH 1/16W 100K	2	
R6375		ERJ3GEYJ103	M.RESISTOR CH 1/16W 10K	1	
R6376		ERJ3GEYJ472	M.RESISTOR CH 1/16W 4.7K	1	
R6377		ERJ14YJ100	M.RESISTOR 1/4W 10	1	
R6378		ERJ3GEYJ102	M.RESISTOR CH 1/16W 1K	1	
R6379,80		ERJ3GEYJ222	M.RESISTOR CH 1/16W 2.2K	2	
R6381		ERJ6GEYK1R0	M.RESISTOR CH1/10W 1.0	1	
R6382		ERJ6GEYJ222	M.RESISTOR CH 1/10W 2.2K	1	
R6383		ERJ3GEYJ103	M.RESISTOR CH 1/16W 10K	1	
R6384		ERJ3GEYJ682	M.RESISTOR CH 1/16W 6.8K	1	
R6385		ERJ3GEYJ153	M.RESISTOR CH 1/16W 15K	1	
R6386		ERJ3GEYJ272	M.RESISTOR CH 1/16W 2.7K	1	
R6387,88		ERJ3GEYJ220	M.RESISTOR CH 1/16W 22	2	
R6389,90		ERJ3GEYJ823	M.RESISTOR CH 1/16W 82K	2	
R6391		ERJ3GEYJ103	M.RESISTOR CH 1/16W 10K	1	
R6392		ERJ3GEYJ152	M.RESISTOR CH 1/16W 1.5K	1	
R6393		ERJ14YJ100	M.RESISTOR 1/4W 10	1	
R6394		ERJ6GEYJ222	M.RESISTOR CH 1/10W 2.2K	1	
R6395		ERJ3GEYJ103	M.RESISTOR CH 1/16W 10K	1	
R6396		ERJ3GEYJ682	M.RESISTOR CH 1/16W 6.8K	1	
R6397		ERJ3GEYJ153	M.RESISTOR CH 1/16W 15K	1	
R6398		ERJ3GEYJ272	M.RESISTOR CH 1/16W 2.7K	1	
R6399,00		ERJ3GEYJ220	M.RESISTOR CH 1/16W 22	2	
R6401,02		ERJ3GEYJ823	M.RESISTOR CH 1/16W 82K	2	
R6403		ERJ3GEYJ103	M.RESISTOR CH 1/16W 10K	1	
R6404		ERJ3GEYJ152	M.RESISTOR CH 1/16W 1.5K	1	
R6405		ERJ14YJ100	M.RESISTOR 1/4W 10	1	
R6406,07		ERJ3GEYJ124	M.RESISTOR CH 1/16W 120K	2	
R6411,12		ERJ3GEYJ103	M.RESISTOR CH 1/16W 10K	2	
R6413		ERJ6GEYJ102	M.RESISTOR CH 1/10W 1K	1	
R6414,15		ERJ3GEYJ563	M.RESISTOR CH 1/16W 56K	2	
R6416		ERJ3GEYJ103	M.RESISTOR CH 1/16W 10K	1	
R6417		ERJ3GEYJ392	M.RESISTOR CH 1/16W 3.9K	1	
R6418		ERJ3GEYJ223	M.RESISTOR CH 1/16W 22K	1	
R6419		ERJ3GEYJ473	M.RESISTOR CH 1/16W 47K	1	
R6420		ERJ3GEYJ104	M.RESISTOR CH 1/16W 100K	1	

Ref.No.		Part No.	Part Name & Description	Pcs	Remarks
R6421-26		ERJ3GEYJ103	M.RESISTOR CH 1/16W 10K	6	
R6427,28		ERJ3GEYJ104	M.RESISTOR CH 1/16W 100K	2	
R6430		ERJ12YJ621	M.RESISTOR 1/2W 620	1	
R6432		VRE0034E103	M.RESISTOR CH 1/10W 10K	1	
R6433,34		VRE0034E473	M.RESISTOR CH 1/10W 47K	2	
R6435,36		VRE0034E123	M.RESISTOR CH 1/10W 12K	2	
R6437,38		VRE0034E32B	M.RESISTOR CH 1/10W 0.32	2	
R6439,40		VRE0034E332	M.RESISTOR CH 1/10W 3.3K	2	
R6441,42		ERJ6GEYK335	M.RESISTOR CH1/10W 3.3M	2	
R6443,44		VRE0034E333	M.RESISTOR CH 1/10W 33K	2	
R6445,46		ERJ6GEY0R00	M.RESISTOR CH 1/10W 0	2	
R6447-49		VRE0034E472	M.RESISTOR CH 1/10W 4.7K	3	
R6450		VRE0034E470	M.RESISTOR CH 1/10W 47	1	
R6451		VRE0034E472	M.RESISTOR CH 1/10W 4.7K	1	
R6452		ERJ6GEYJ103	M.RESISTOR CH 1/10W 10K	1	
R6453,54		VRE0034E472	M.RESISTOR CH 1/10W 4.7K	2	
R6455		ERJ3GEYJ472	M.RESISTOR CH 1/16W 4.7K	1	
R6456		ERJ3GEYJ822	M.RESISTOR CH 1/16W 8.2K	1	
R6457-59		ERJ3GEYJ103	M.RESISTOR CH 1/16W 10K	3	
R6460		ERJ3GEYJ272	M.RESISTOR CH 1/16W 2.7K	1	
R6461		ERJ3GEYJ332	M.RESISTOR CH 1/16W 3.3K	1	
R6462		ERJ3GEYJ472	M.RESISTOR CH 1/16W 4.7K	1	
R6463		ERJ3GEYJ103	M.RESISTOR CH 1/16W 10K	1	
R6464		ERJ3GEYJ472	M.RESISTOR CH 1/16W 4.7K	1	
R6465		ERJ3GEYJ332	M.RESISTOR CH 1/16W 3.3K	1	
R6466		ERJ3GEYJ102	M.RESISTOR CH 1/16W 1K	1	
R6467		ERJ3GEYJ392	M.RESISTOR CH 1/16W 3.9K	1	
R6468		ERJ6GEYJ471	M.RESISTOR CH 1/10W 470	1	
R6469		ERJ6GEY0R00	M.RESISTOR CH 1/10W 0	1	
R6470		ERJ3GEYJ222	M.RESISTOR CH 1/16W 2.2K	1	
R6471		ERJ6GEY0R00	M.RESISTOR CH 1/10W 0	1	
R6472,73		ERJ3GEYJ103	M.RESISTOR CH 1/16W 10K	2	
R6474		ERJ6GEYJ100	M.RESISTOR CH 1/10W 10	1	
R6475,76		ERJ3GEYJ223	M.RESISTOR CH 1/16W 22K	2	
R6477		ERJ3GEYJ472	M.RESISTOR CH 1/16W 4.7K	1	
R6478		ERJ3GEYJ561	M.RESISTOR CH 1/16W 560	1	
R6479		ERJ3GEYJ103	M.RESISTOR CH 1/16W 10K	1	
R6480		ERJ3GEYJ332	M.RESISTOR CH 1/16W 3.3K	1	
R6481		ERJ3GEYJ473	M.RESISTOR CH 1/16W 47K	1	
R6485		ERJ6GEYJ470	M.RESISTOR CH 1/10W 47	1	
R6486		ERJ3GEYJ104	M.RESISTOR CH 1/16W 100K	1	
R6487		ERJ3GEYJ103	M.RESISTOR CH 1/16W 10K	1	
R6488,89		ERJ3GEYJ102	M.RESISTOR CH 1/16W 1K	2	
R6490		ERJ3GEYJ682	M.RESISTOR CH 1/16W 6.8K	1	
R6491,92		ERJ3GEYJ101	M.RESISTOR CH 1/16W 100	2	
R6493		ERJ3GEYJ561	M.RESISTOR CH 1/16W 560	1	
R6494-97		ERJ3GEYJ103	M.RESISTOR CH 1/16W 10K	4	
R6498		ERJ3GEYJ101	M.RESISTOR CH 1/16W 100	1	
R6499		ERJ3GEYJ221	M.RESISTOR CH 1/16W 220	1	
R6501		ERJ3GEYJ103	M.RESISTOR CH 1/16W 10K	1	
R6502		ERJ3GEYJ473	M.RESISTOR CH 1/16W 47K	1	
R6503		ERJ3GEYJ472	M.RESISTOR CH 1/16W 4.7K	1	
R6504		ERJ3GEYJ682	M.RESISTOR CH 1/16W 6.8K	1	
R6505		ERJ3GEYJ103	M.RESISTOR CH 1/16W 10K	1	
R6506		ERJ3GEYJ272	M.RESISTOR CH 1/16W 2.7K	1	
R6507		ERJ3GEYJ332	M.RESISTOR CH 1/16W 3.3K	1	
R6508		ERJ3GEYJ102	M.RESISTOR CH 1/16W 1K	1	
R6509		ERJ3GEYJ103	M.RESISTOR CH 1/16W 10K	1	
R6510		ERJ3GEYJ332	M.RESISTOR CH 1/16W 3.3K	1	
R6511		ERJ3GEYJ103	M.RESISTOR CH 1/16W 10K	1	
R6512		ERJ3GEYJ472	M.RESISTOR CH 1/16W 4.7K	1	
R6513		ERJ3GEYJ822	M.RESISTOR CH 1/16W 8.2K	1	
R6514,15		ERJ3GEYJ103	M.RESISTOR CH 1/16W 10K	2	
R6516		ERJ6GEYJ470	M.RESISTOR CH 1/10W 47	1	
R6517		ERJ3GEYJ104	M.RESISTOR CH 1/16W 100K	1	
R6518		ERJ3GEYJ103	M.RESISTOR CH 1/16W 10K	1	
R6519,20		ERJ3GEYJ102	M.RESISTOR CH 1/16W 1K	2	
R6521		ERJ3GEYJ392	M.RESISTOR CH 1/16W 3.9K	1	
R6522,23		ERJ3GEYJ101	M.RESISTOR CH 1/16W 100	2	
R6524		ERJ3GEYJ103	M.RESISTOR CH 1/16W 10K	1	
R6525,26		ERJ3GEYJ272	M.RESISTOR CH 1/16W 2.7K	2	
R6527,28		ERJ6GEY0R00	M.RESISTOR CH 1/10W 0	2	
R6529		ERJ3GEYJ102	M.RESISTOR CH 1/16W 1K	1	
R6530		VRE0034E79C	M.RESISTOR CH 1/10W	1	
R6531		VRE0034E60B	M.RESISTOR CH 1/10W 6	1	

Ref.No.		Part No.	Part Name & Description	Pcs	Remarks
R6532		ERJ6GEY0R00	M.RESISTOR CH 1/10W 0	1	
R6533		VRE0034E20B	M.RESISTOR CH 1/10W 2	1	
R6534		VRE0034E272	M.RESISTOR CH 1/10W 2.7K	1	
R6535		VRE0034E472	M.RESISTOR CH 1/10W 4.7K	1	
R6536		VRE0034E682	M.RESISTOR CH 1/10W 6.8K	1	
R6537		VRE0034E103	M.RESISTOR CH 1/10W 10K	1	
R6538,39		VRE0034E472	M.RESISTOR CH 1/10W 4.7K	2	
R6540		ERJ6GEYJ105	M.RESISTOR CH 1/10W 1M	1	
R6541,42		VRE0034E153	M.RESISTOR CH 1/10W 15K	2	
R6543		VRE0034E150	M.RESISTOR CH 1/10W 15	1	
R6544		ERJ6GEYJ100	M.RESISTOR CH 1/10W 10	1	
R6545,46		ERJ6GEYJ562	M.RESISTOR CH 1/10W 5.6K	2	
R6547,48		ERJ14YJ100	M.RESISTOR 1/4W 10	2	
R6549		ERJ14YJ220	M.RESISTOR 1/4W 22	1	
R6550		ERJ3GEYJ103	M.RESISTOR CH 1/16W 10K	1	
R6551,52		VRE0034E472	M.RESISTOR CH 1/10W 4.7K	2	
R6553		ERJ6GEYJ105	M.RESISTOR CH 1/10W 1M	1	
R6554,55		VRE0034E153	M.RESISTOR CH 1/10W 15K	2	
R6556		ERJ6GEYJ100	M.RESISTOR CH 1/10W 10	1	
R6557,58		ERJ6GEYJ562	M.RESISTOR CH 1/10W 5.6K	2	
R6559,60		ERJ14YJ100	M.RESISTOR 1/4W 10	2	
R6561		ERJ14YJ220	M.RESISTOR 1/4W 22	1	
R6562		ERJ3GEYJ103	M.RESISTOR CH 1/16W 10K	1	
R6563		ERJ3GEYJ473	M.RESISTOR CH 1/16W 47K	1	
R6564		ERJ6GEYJ681	M.RESISTOR CH 1/10W 680	1	
R6565		ERJ6GEY0R00	M.RESISTOR CH 1/10W 0	1	
R6566		ERJ3GEYJ473	M.RESISTOR CH 1/16W 47K	1	
R6571		ERJ6GEYJ102	M.RESISTOR CH 1/10W 1K	1	
R6572,73		ERJ3GEYJ563	M.RESISTOR CH 1/16W 56K	2	
R6574-78		ERJ3GEYJ103	M.RESISTOR CH 1/16W 10K	5	
R6579		ERJ3GEYJ392	M.RESISTOR CH 1/16W 3.9K	1	
R6580		ERJ3GEYJ223	M.RESISTOR CH 1/16W 22K	1	
R6581		ERJ3GEYJ103	M.RESISTOR CH 1/16W 10K	1	
R6582		ERJ3GEYJ223	M.RESISTOR CH 1/16W 22K	1	
R6583		ERJ3GEYJ392	M.RESISTOR CH 1/16W 3.9K	1	
R6584		ERJ3GEYJ223	M.RESISTOR CH 1/16W 22K	1	
R6585		ERJ3GEYJ103	M.RESISTOR CH 1/16W 10K	1	
R6586		ERJ3GEYJ682	M.RESISTOR CH 1/16W 6.8K	1	
R6587		ERJ3GEYJ822	M.RESISTOR CH 1/16W 8.2K	1	
R6588		ERJ3GEYJ272	M.RESISTOR CH 1/16W 2.7K	1	
R6589		ERJ3GEYJ562	M.RESISTOR CH 1/16W 5.6K	1	
R6590,91		ERJ3GEYJ103	M.RESISTOR CH 1/16W 10K	2	
R6592		ERJ6GEYJ100	M.RESISTOR CH 1/10W 10	1	
R6593		ERJ3GEYJ182	M.RESISTOR CH 1/16W 1.8K	1	
R6594		ERJ3GEYJ472	M.RESISTOR CH 1/16W 4.7K	1	
R6595		ERJ3GEYJ561	M.RESISTOR CH 1/16W 560	1	
R6596		ERJ3GEYJ101	M.RESISTOR CH 1/16W 100	1	
R6597		ERJ3GEYJ332	M.RESISTOR CH 1/16W 3.3K	1	
R6598		ERJ3GEYJ103	M.RESISTOR CH 1/16W 10K	1	
R6599		ERJ3GEYJ561	M.RESISTOR CH 1/16W 560	1	
R6600		ERJ3GEYJ473	M.RESISTOR CH 1/16W 47K	1	
R6601		ERJ3GEYJ154	M.RESISTOR CH 1/16W 150K	1	
R6602		ERJ6GEYJ102	M.RESISTOR CH 1/10W 1K	1	
R6603		ERJ3GEYJ103	M.RESISTOR CH 1/16W 10K	1	
R6604		ERJ3GEYJ153	M.RESISTOR CH 1/16W 15K	1	
R6605		ERJ3GEYJ472	M.RESISTOR CH 1/16W 4.7K	1	
R6606		ERJ3GEYJ122	M.RESISTOR CH 1/16W 1.2K	1	
R6607		ERJ3GEYJ104	M.RESISTOR CH 1/16W 100K	1	
R6608,09		ERJ6GEYJ101	M.RESISTOR CH 1/10W 100	2	
R6610		ERJ3GEYJ103	M.RESISTOR CH 1/16W 10K	1	
R6611		ERJ3GEYJ472	M.RESISTOR CH 1/16W 4.7K	1	
R6612		ERJ3GEYJ182	M.RESISTOR CH 1/16W 1.8K	1	
R6613		ERJ3GEYJ823	M.RESISTOR CH 1/16W 82K	1	
R6614,15		ERJ6GEYJ101	M.RESISTOR CH 1/10W 100	2	
R6617		ERJ3GEYJ103	M.RESISTOR CH 1/16W 10K	1	
R6618		ERJ6GEYJ681	M.RESISTOR CH 1/10W 680	1	
R6619		ERJ3GEYJ222	M.RESISTOR CH 1/16W 2.2K	1	
R6620		ERJ3GEYJ182	M.RESISTOR CH 1/16W 1.8K	1	
R6621		ERJ3GEYJ472	M.RESISTOR CH 1/16W 4.7K	1	
R6622,23		ERJ6GEYJ101	M.RESISTOR CH 1/10W 100	2	
R6624		ERJ3GEYJ103	M.RESISTOR CH 1/16W 10K	1	
R6625		ERJ3GEYJ561	M.RESISTOR CH 1/16W 560	1	
R6626		ERJ3GEYJ182	M.RESISTOR CH 1/16W 1.8K	1	
R6627		ERJ3GEYJ101	M.RESISTOR CH 1/16W 100	1	
R6628		ERJ3GEYJ103	M.RESISTOR CH 1/16W 10K	1	

Ref.No.		Part No.	Part Name & Description	Pcs	Remarks
R6629		ERJ3GEYJ561	M.RESISTOR CH 1/16W 560	1	
R6630		ERJ3GEYJ473	M.RESISTOR CH 1/16W 47K	1	
R6631		ERJ3GEYJ154	M.RESISTOR CH 1/16W 150K	1	
R6632		ERJ6GEYJ102	M.RESISTOR CH 1/10W 1K	1	
R6633		ERJ3GEYJ103	M.RESISTOR CH 1/16W 10K	1	
R6634		ERJ3GEYJ153	M.RESISTOR CH 1/16W 15K	1	
R6635		ERJ3GEYJ472	M.RESISTOR CH 1/16W 4.7K	1	
R6636		ERJ3GEYJ122	M.RESISTOR CH 1/16W 1.2K	1	
R6637		ERJ3GEYJ104	M.RESISTOR CH 1/16W 100K	1	
R6638,39		ERJ6GEYJ101	M.RESISTOR CH 1/10W 100	2	
R6640		ERJ3GEYJ103	M.RESISTOR CH 1/16W 10K	1	
R6641		ERJ3GEYJ472	M.RESISTOR CH 1/16W 4.7K	1	
R6642		ERJ3GEYJ182	M.RESISTOR CH 1/16W 1.8K	1	
R6643		ERJ3GEYJ823	M.RESISTOR CH 1/16W 82K	1	
R6644,45		ERJ6GEYJ101	M.RESISTOR CH 1/10W 100	2	
R6646		ERJ3GEYJ103	M.RESISTOR CH 1/16W 10K	1	
R6647		ERJ6GEYJ681	M.RESISTOR CH 1/10W 680	1	
R6691-93		ERJ3GEYJ103	M.RESISTOR CH 1/16W 10K	3	
RA6001,02		EXBLD8103G	COMBI.R-R 10K	2	
RY6301		VSY2039	RELAY	1	
SW6302,03		VJP1990	CONNECTOR	2	
SW6304,05		VSS0126	SWITCH	2	
SW6306		VSS0162	SWITCH	1	
SW6309		VSS0187	SWITCH	1	
SWS6301		VJS1990	CONNECTOR	1	
T6301		VLT0540	TRANSFORMER	1	
T6302		VLT0545	TRANSFORMER	1	
T6303-06		VLT0603	TRANSFORMER	4	
T6307,08		VLT0602	TRANSFORMER	2	
TP6002		VJR0646	TEST POINT	1	
TP6004-06		VJR0646	TEST POINT	3	
TP6014		VJR0646	TEST POINT	1	
TP6301-10		VJR0646	TEST POINT	10	
TP6312-19		VJR0646	TEST POINT	8	
TPG6001		VJR0646	TEST POINT	1	
TPG6301-03		VJR0646	TEST POINT	3	
TPG6306		VJR0646	TEST POINT	1	
VR6001		VRV0113B102	V.RESISTOR 1K	1	
VR6301,02		VRV0113B104	T.RESISTOR 100K	2	
VR6303		VRV0113B201	V.RESISTOR CH 1/10W 200	1	
VR6304		VRV0113B103	T.RESISTOR 10K	1	
VR6305,06		VRV0113B502	T.RESISTOR 5K	2	
VR6307		VRV0113B501	T.RESISTOR 500	1	
VR6308		VRV0113B502	T.RESISTOR 5K	1	
VR6309		VRV0113B202	T.RESISTOR 2K	1	
VR6310		VRV0113B103	T.RESISTOR 10K	1	
VR6311		VRV0113B502	T.RESISTOR 5K	1	
VR6312		VRV0113B503	T.RESISTOR 50K	1	
VR6313		VRV0113B103	T.RESISTOR 10K	1	
VR6314		VRV0113B501	T.RESISTOR 500	1	
VR6315		VRV0113B103	T.RESISTOR 10K	1	
X6001		VSX0499	CRYSTAL OSCILLATOR	1	
X6004		VSX0098	CRYSTAL OSCILLATOR	1	
X6005		VSX0498	CRYSTAL OSCILLATOR	1	

Ref.No.		Part No.	Part Name & Description	Pcs	Remarks
			MISCELLANEOUS		
		VML2143	LEVER. ARM.	1	
		VML2144	LEVER. ARM.	1	
		VXA4420	P.C.BOARD SHIELD PLATE	1	
		XTV3+6FFR	SCREW	5	

S4 SERVO/AT VEP82093B

Ref.No.		Part No.	Part Name & Description	Pcs	Remarks
S4	■	VEP82093B	P.C.BOARD W/COMPONENT		
			SERVO/AT		
			CAPACITORS		
C2001,02		ECEV1CV470	E.CAPACITOR 16V 47U	2	
C2003,04		ECUX1H120JCV	C.CAPACITOR CH 50V 12P	2	
C2005		ECUX1H103ZFV	C.CAPACITOR CH 50V 0.01U	1	
C2006-08		ECUX1H103KBV	C.CAPACITOR CH 50V 0.01U	3	
C2009-13		ECUX1H103ZFV	C.CAPACITOR CH 50V 0.01U	5	
C2014,15		ECEV1CV470	E.CAPACITOR 16V 47U	2	
C2101-04		ECEV1EV330	E.CAPACITOR 25V 33U	4	
C2105,06		ECUX1H103KBV	C.CAPACITOR CH 50V 0.01U	2	
C2107-10		ECUX1H102KBV	C.CAPACITOR 50V 1000P	4	
C2111		ECUX1H103KBV	C.CAPACITOR CH 50V 0.01U	1	
C2112-14		ECUX1H103ZFV	C.CAPACITOR CH 50V 0.01U	3	
C2118-21		ECEV1EV330	E.CAPACITOR 25V 33U	4	
C2122,23		ECUX1H103KBV	C.CAPACITOR CH 50V 0.01U	2	
C2124-27		ECUX1H102KBV	C.CAPACITOR 50V 1000P	4	
C2128-30		ECUX1H103ZFV	C.CAPACITOR CH 50V 0.01U	3	
C2131-34		ECEV1EV330	E.CAPACITOR 25V 33U	4	
C2135,36		ECUX1H103KBV	C.CAPACITOR CH 50V 0.01U	2	
C2137-40		ECUX1H102KBV	C.CAPACITOR 50V 1000P	4	
C2141-43		ECUX1H103ZFV	C.CAPACITOR CH 50V 0.01U	3	
C2301		ECEV1CN100	E.CAPACITOR 16V 10U	1	
C2302		ECEV1CV220	E.CAPACITOR 16V 22U	1	
C2303		ECEV1CV470	E.CAPACITOR 16V 47U	1	
C2304-09		ECUX1H103ZFV	C.CAPACITOR CH 50V 0.01U	6	
C2310-13		ECUX1H222KBV	C.CAPACITOR CH 50V 2200P	4	
C2314,15		ECEV1CN100	E.CAPACITOR 16V 10U	2	
C2316-21		ECUX1H103ZFV	C.CAPACITOR CH 50V 0.01U	6	
C2322,23		ECUX1H103KBV	C.CAPACITOR CH 50V 0.01U	2	
C2324		ECEV1CV220	E.CAPACITOR 16V 22U	1	
C2325		ECEV1CV470	E.CAPACITOR 16V 47U	1	
C2401		ECEV1CV100	E.CAPACITOR 16V 10U	1	
C2402,03		ECEV1CV470	E.CAPACITOR 16V 47U	2	
C2404,05		ECUX1H103ZFV	C.CAPACITOR CH 50V 0.01U	2	
C2406-11		ECUX1H103KBV	C.CAPACITOR CH 50V 0.01U	6	
C2414,15		ECUX1H103ZFV	C.CAPACITOR CH 50V 0.01U	2	
C2416,17		ECUX1H103KBV	C.CAPACITOR CH 50V 0.01U	2	
C2418-21		ECUX1H103ZFV	C.CAPACITOR CH 50V 0.01U	4	
C2422		ECUX1H103KBV	C.CAPACITOR CH 50V 0.01U	1	
C2423-26		ECUX1H103ZFV	C.CAPACITOR CH 50V 0.01U	4	
C2427-34		ECUX1H103KBV	C.CAPACITOR CH 50V 0.01U	8	
C2435-40		ECUX1H103ZFV	C.CAPACITOR CH 50V 0.01U	6	
C2441,42		ECUX1C333KBV	C.CAPACITOR CH 16V 330P	2	
C2445		ECUX1H472KBV	C.CAPACITOR 50V 4700P	1	
C2501		ECUX1H103ZFV	C.CAPACITOR CH 50V 0.01U	1	
C2701-03		ECEV1HV010	E.CAPACITOR 50V 1U	3	
C2704		ECEV1EV330	E.CAPACITOR 25V 33U	1	
C2705,06		ECEV1CV470	E.CAPACITOR 16V 47U	2	
C2707		ECEV1EV330	E.CAPACITOR 25V 33U	1	
C2708		ECEV1CV470	E.CAPACITOR 16V 47U	1	
C2710-20		ECUX1H103ZFV	C.CAPACITOR CH 50V 0.01U	11	
C2722-81		ECUX1H103ZFV	C.CAPACITOR CH 50V 0.01U	60	
D2001		LN1251CAL	DIODE	1	
D2003,04		LN1251CAL	DIODE	2	
D2006,07		LN1251CAL	DIODE	2	
D2101-12		MA157	DIODE	12	
D2301-04		MA8039-L	DIODE	4	
D2305		MA157	DIODE	1	
D2306-09		MA8039-L	DIODE	4	
D2310-12		MA151K	DIODE	3	
D2313		MA157	DIODE	1	

Ref.No.		Part No.	Part Name & Description	Pcs	Remarks
FL2701-05		VLF0576	FILTER	5	
IC2001		TL7705CPSB	IC	1	
IC2002		MC68332CFC	IC	1	
IC2003		VSI1326	IC	1	
IC2005		TC7WU04F	IC	1	
IC2007		MC74HC4050F	IC	1	
IC2009		MC74HC4002F	IC	1	
IC2011		MC74HC157AF	IC	1	
IC2012		74AC74SJ	IC	1	
IC2014		74AC08SJ	IC	1	
IC2018,19		MN4464S08L	IC	2	
IC2020		MB8421-90LPF	IC	1	
IC2021		SN74S1051NS	IC	1	
IC2024		SN74S1051NS	IC	1	
IC2027		MC74HC86F	IC	1	
IC2031		MC74HC74AF	IC	1	
IC2033		MC74HC273AF	IC	1	
IC2034		MC74HC175F	IC	1	
IC2035		MC74HC164F	IC	1	
IC2036		MC74HC08AF	IC	1	
IC2040		EXBLD8103G	COMBI.R-R 10K	1	
IC2041		SLA909SF1G	IC	1	
IC2042		MC74HCT244AF	IC	1	
IC2045		MC74HC151F	IC	1	
IC2046		TE7750	IC	1	
IC2050		MC74HC244AF	IC	1	
IC2051		MC74HC175F	IC	1	
IC2052		MC74HC153F	IC	1	
IC2101,02		UPC4741G2	IC	2	
IC2109,10		MC74HC4050F	IC	2	
IC2113		UPC4558G2	IC	1	
IC2115		UPC4558G2	IC	1	
IC2117		NJM2901M	IC	1	
IC2135,36		UPC4741G2	IC	2	
IC2147		UPC4558G2	IC	1	
IC2149		UPD4066BG	IC	1	
IC2153		NJM2901M	IC	1	
IC2157,58		UPC4741G2	IC	2	
IC2169		UPC4558G2	IC	1	
IC2171		UPD4066BG	IC	1	
IC2175		NJM2901M	IC	1	
IC2301		MC74HC4053F	IC	1	
IC2304		MC74HC4052F	IC	1	
IC2306,07		NJM4580ED	IC	2	
IC2310		UPC4558G2	IC	1	
IC2311		ADG211AKR	IC	1	
IC2312		AD633JR	IC	1	
IC2313		MC74HC4053F	IC	1	
IC2317,18		UPC4558G2	IC	2	
IC2401		UPC4074G2	IC	1	
IC2405		UPC4741G2	IC	1	
IC2409		UPC4074G2	IC	1	
IC2413		UPC4074G2	IC	1	
IC2417		UPC4741G2	IC	1	
IC2421		AD7868AR	IC	1	
IC2422-25		MC74HC4051F	IC	4	
IC2426		NJM4580ED	IC	1	
IC2428		UPC4082G2	IC	1	
IC2432,33		UPC4558G2	IC	2	
IC2501		NJM2903M	IC	1	
IC2701		NJM78L12UA	IC	1	
IC2702		NJM79L12UA	IC	1	
IC2703-05		NJM78L12UA	IC	3	
IC2706		NJM79L12UA	IC	1	
IC2707,08		NJM78L05UA	IC	2	
IC2709		NJM79L05UA	IC	1	
L2001,02		VLQ0576	COIL	2	

Ref.No.		Part No.	Part Name & Description	Pcs	Remarks
P207,08		VJP3454B096	CONNECTOR (MALE)	2	
Q2101,02		UN2113	TRANSISTOR-RESISTOR	2	
Q2103-06		UN2213	TRANSISTOR-RESISTOR	4	
Q2107,08		UN2113	TRANSISTOR-RESISTOR	2	
Q2109-13		UN2213	TRANSISTOR-RESISTOR	5	
Q2114,15		UN2113	TRANSISTOR-RESISTOR	2	
Q2116-19		UN2213	TRANSISTOR-RESISTOR	4	
Q2301-03		2SB709-R	TRANSISTOR CHIP	3	(R)
Q2304,05		2SD601-R	TRANSISTOR CHIP	2	(R)
Q2306		UN2113	TRANSISTOR-RESISTOR	1	
Q2307		UN2215	TRANSISTOR-RESISTOR	1	
Q2308,09		UN2213	TRANSISTOR-RESISTOR	2	
Q2310		2SD601-R	TRANSISTOR CHIP	1	(R)
Q2311		UN2115	COMBINATION PARTS	1	
			RESISTORS		
R2001		ERJ3GEYJ562	M.RESISTOR CH 1/16W 5.6K	1	
R2003		ERJ3GEYJ101	M.RESISTOR CH 1/16W 100	1	
R2004		ERJ3GEYJ473	M.RESISTOR CH 1/16W 47K	1	
R2005		ERJ3GEY0R00	M.RESISTOR CH 1/16W 0	1	
R2006		ERJ3GEYJ105	M.RESISTOR CH 1/16W 1M	1	
R2007-10		ERJ3GEYJ562	M.RESISTOR CH 1/16W 5.6K	4	
R2011		ERJ3GEY0R00	M.RESISTOR CH 1/16W 0	1	
R2012-17		ERJ3GEYJ562	M.RESISTOR CH 1/16W 5.6K	6	
R2018		ERJ3GEYJ473	M.RESISTOR CH 1/16W 47K	1	
R2019		ERJ3GEYJ103	M.RESISTOR CH 1/16W 10K	1	
R2020-22		ERJ3GEYJ473	M.RESISTOR CH 1/16W 47K	3	
R2024		ERJ3GEYJ103	M.RESISTOR CH 1/16W 10K	1	
R2025-27		ERJ3GEYJ101	M.RESISTOR CH 1/16W 100	3	
R2028		ERJ3GEYJ152	M.RESISTOR CH 1/16W 1.5K	1	
R2029,30		ERJ3GEYJ473	M.RESISTOR CH 1/16W 47K	2	
R2032		ERJ3GEY0R00	M.RESISTOR CH 1/16W 0	1	
R2033-36		ERJ3GEYJ101	M.RESISTOR CH 1/16W 100	4	
R2037		ERJ3GEY0R00	M.RESISTOR CH 1/16W 0	1	
R2039,40		ERJ3GEYJ471	M.RESISTOR CH 1/16W 470	2	
R2041,42		ERJ3GEYJ104	M.RESISTOR CH 1/16W 100K	2	
R2043,44		ERJ3GEYJ473	M.RESISTOR CH 1/16W 47K	2	
R2046		ERJ3GEYJ101	M.RESISTOR CH 1/16W 100	1	
R2056,57		ERJ3GEYJ821	M.RESISTOR CH 1/16W 820	2	
R2060-62		ERJ3GEYJ821	M.RESISTOR CH 1/16W 820	3	
R2101,02		ERJ3GEYJ103	M.RESISTOR CH 1/16W 10K	2	
R2103,04		ERJ3GEYJ333	M.RESISTOR CH 1/16W 33K	2	
R2105,06		ERJ3GEYJ562	M.RESISTOR CH 1/16W 5.6K	2	
R2107,08		ERJ3GEYJ224	M.RESISTOR CH 1/16W 220K	2	
R2109,10		ERJ3GEYJ562	M.RESISTOR CH 1/16W 5.6K	2	
R2111,12		ERJ3GEYJ332	M.RESISTOR CH 1/16W 3.3K	2	
R2113		ERJ3GEYJ224	M.RESISTOR CH 1/16W 220K	1	
R2114		VRE0034E333	M.RESISTOR CH 1/10W 33K	1	
R2115		ERJ3GEYJ224	M.RESISTOR CH 1/16W 220K	1	
R2116-18		VRE0034E333	M.RESISTOR CH 1/10W 33K	3	
R2119,20		ERJ3GEYJ332	M.RESISTOR CH 1/16W 3.3K	2	
R2121-28		VRE0034E473	M.RESISTOR CH 1/10W 47K	8	
R2129-32		VRE0034E224	M.RESISTOR CH 1/10W 220K	4	
R2133-36		ERJ3GEYJ103	M.RESISTOR CH 1/16W 10K	4	
R2137-40		ERJ3GEYJ472	M.RESISTOR CH 1/16W 4.7K	4	
R2141,42		VRE0034E562	M.RESISTOR CH 1/10W 5.6K	2	
R2143-46		ERJ3GEYJ104	M.RESISTOR CH 1/16W 100K	4	
R2191,92		ERJ3GEYJ103	M.RESISTOR CH 1/16W 10K	2	
R2193,94		ERJ3GEYJ333	M.RESISTOR CH 1/16W 33K	2	
R2195-98		ERJ3GEYJ562	M.RESISTOR CH 1/16W 5.6K	4	
R2199		ERJ3GEYJ473	M.RESISTOR CH 1/16W 47K	1	
R2200,01		ERJ3GEYJ683	M.RESISTOR CH 1/16W 68K	2	
R2202,03		ERJ3GEYJ154	M.RESISTOR CH 1/16W 150K	2	
R2204,05		ERJ3GEYJ683	M.RESISTOR CH 1/16W 68K	2	
R2206,07		ERJ3GEYJ332	M.RESISTOR CH 1/16W 3.3K	2	
R2208,09		ERJ3GEYJ154	M.RESISTOR CH 1/16W 150K	2	
R2210-13		VRE0034E333	M.RESISTOR CH 1/10W 33K	4	
R2214,15		ERJ3GEYJ332	M.RESISTOR CH 1/16W 3.3K	2	
R2216-23		VRE0034E473	M.RESISTOR CH 1/10W 47K	8	

Ref.No.		Part No.	Part Name & Description	Pcs	Remarks
R2224-27		VRE0034E224	M.RESISTOR CH 1/10W 220K	4	
R2228-31		ERJ3GEYJ103	M.RESISTOR CH 1/16W 10K	4	
R2232-35		ERJ3GEYJ472	M.RESISTOR CH 1/16W 4.7K	4	
R2236,37		ERJ3GEYJ103	M.RESISTOR CH 1/16W 10K	2	
R2238,39		ERJ3GEYJ333	M.RESISTOR CH 1/16W 33K	2	
R2240-43		ERJ3GEYJ562	M.RESISTOR CH 1/16W 5.6K	4	
R2244,45		ERJ3GEYJ683	M.RESISTOR CH 1/16W 68K	2	
R2246,47		ERJ3GEYJ154	M.RESISTOR CH 1/16W 150K	2	
R2248,49		ERJ3GEYJ683	M.RESISTOR CH 1/16W 68K	2	
R2250,51		ERJ3GEYJ332	M.RESISTOR CH 1/16W 3.3K	2	
R2252,53		ERJ3GEYJ154	M.RESISTOR CH 1/16W 150K	2	
R2254-57		VRE0034E333	M.RESISTOR CH 1/10W 33K	4	
R2258,59		ERJ3GEYJ332	M.RESISTOR CH 1/16W 3.3K	2	
R2260-67		VRE0034E473	M.RESISTOR CH 1/10W 47K	8	
R2268-71		VRE0034E224	M.RESISTOR CH 1/10W 220K	4	
R2272-75		ERJ3GEYJ103	M.RESISTOR CH 1/16W 10K	4	
R2276-79		ERJ3GEYJ472	M.RESISTOR CH 1/16W 4.7K	4	
R2301		ERJ3GEYJ101	M.RESISTOR CH 1/16W 100	1	
R2302		ERJ3GEYJ563	M.RESISTOR CH 1/16W 56K	1	
R2303		ERJ3GEYJ104	M.RESISTOR CH 1/16W 100K	1	
R2304,05		ERJ3GEYJ103	M.RESISTOR CH 1/16W 10K	2	
R2307		VRE0034E152	M.RESISTOR CH 1/10W 1.5K	1	
R2308		ERJ3GEYJ183	M.RESISTOR CH 1/16W 18K	1	
R2309		ERJ3GEYJ823	M.RESISTOR CH 1/16W 82K	1	
R2310		ERJ3GEYJ183	M.RESISTOR CH 1/16W 18K	1	
R2311		ERJ3GEYJ823	M.RESISTOR CH 1/16W 82K	1	
R2313		VRE0034E221	M.RESISTOR CH 1/10W 220	1	
R2314		ERJ3GEYJ562	M.RESISTOR CH 1/16W 5.6K	1	
R2315		ERJ3GEYJ103	M.RESISTOR CH 1/16W 10K	1	
R2316,17		ERJ3GEYJ562	M.RESISTOR CH 1/16W 5.6K	2	
R2318		ERJ3GEYJ273	M.RESISTOR CH 1/16W 27K	1	
R2319,20		VRE0034E471	M.RESISTOR CH 1/10W 470	2	
R2321,22		ERJ3GEYJ102	M.RESISTOR CH 1/16W 1K	2	
R2323,24		ERJ3GEYJ122	M.RESISTOR CH 1/16W 1.2K	2	
R2325,26		ERJ3GEYJ102	M.RESISTOR CH 1/16W 1K	2	
R2327,28		ERJ3GEYJ124	M.RESISTOR CH 1/16W 120K	2	
R2329,30		ERJ3GEYJ474	M.RESISTOR CH 1/16W 470K	2	
R2331,32		ERJ3GEYJ153	M.RESISTOR CH 1/16W 15K	2	
R2333,34		ERJ3GEYJ392	M.RESISTOR CH 1/16W 3.9K	2	
R2335,36		ERJ3GEYJ122	M.RESISTOR CH 1/16W 1.2K	2	
R2337		ERJ3GEYJ153	M.RESISTOR CH 1/16W 15K	1	
R2338		ERJ3GEYJ223	M.RESISTOR CH 1/16W 22K	1	
R2339		ERJ3GEYJ153	M.RESISTOR CH 1/16W 15K	1	
R2340,41		ERJ3GEYJ682	M.RESISTOR CH 1/16W 6.8K	2	
R2342-44		ERJ3GEYJ103	M.RESISTOR CH 1/16W 10K	3	
R2345		VRE0034E683	M.RESISTOR CH 1/10W 68K	1	
R2346		VRE0034E104	M.RESISTOR CH 1/10W 100K	1	
R2347,48		VRE0034E332	M.RESISTOR CH 1/10W 3.3K	2	
R2349		ERJ3GEYJ223	M.RESISTOR CH 1/16W 22K	1	
R2350		VRE0034E122	M.RESISTOR CH 1/10W 1.2K	1	
R2351		VRE0034E563	M.RESISTOR CH 1/10W 56K	1	
R2352		ERJ3GEYJ102	M.RESISTOR CH 1/16W 1K	1	
R2353		ERJ3GEYJ683	M.RESISTOR CH 1/16W 68K	1	
R2354		ERJ3GEYJ103	M.RESISTOR CH 1/16W 10K	1	
R2355		VRE0034E273	M.RESISTOR CH 1/10W 27K	1	
R2356		VRE0034E103	M.RESISTOR CH 1/10W 10K	1	
R2357		ERJ3GEYJ563	M.RESISTOR CH 1/16W 56K	1	
R2358		ERJ3GEYJ104	M.RESISTOR CH 1/16W 100K	1	
R2401		VRE0034E563	M.RESISTOR CH 1/10W 56K	1	
R2402		VRE0034E273	M.RESISTOR CH 1/10W 27K	1	
R2403		VRE0034E222	M.RESISTOR CH 1/10W 2.2K	1	
R2404		VRE0034E332	M.RESISTOR CH 1/10W 3.3K	1	
R2405		VRE0034E112	M.RESISTOR CH 1/10W 1.1K	1	
R2406-10		ERJ3GEYJ561	M.RESISTOR CH 1/16W 560	5	
R2411		ERJ3GEYJ221	M.RESISTOR CH 1/16W 220	1	
R2412		VRE0034E273	M.RESISTOR CH 1/10W 27K	1	
R2413		VRE0034E563	M.RESISTOR CH 1/10W 56K	1	
R2414		VRE0034E273	M.RESISTOR CH 1/10W 27K	1	
R2415		VRE0034E563	M.RESISTOR CH 1/10W 56K	1	
R2416		VRE0034E273	M.RESISTOR CH 1/10W 27K	1	
R2417		VRE0034E563	M.RESISTOR CH 1/10W 56K	1	
R2418		VRE0034E273	M.RESISTOR CH 1/10W 27K	1	
R2419		VRE0034E563	M.RESISTOR CH 1/10W 56K	1	
R2420		VRE0034E273	M.RESISTOR CH 1/10W 27K	1	
R2421		VRE0034E563	M.RESISTOR CH 1/10W 56K	1	

Ref.No.		Part No.	Part Name & Description	Pcs	Remarks
R2422,23		ERJ3GEYJ472	M.RESISTOR CH 1/16W 4.7K	2	
R2424,25		ERJ3GEYJ473	M.RESISTOR CH 1/16W 47K	2	
R2429,30		ERJ3GEYJ473	M.RESISTOR CH 1/16W 47K	2	
R2436-39		ERJ3GEYJ153	M.RESISTOR CH 1/16W 15K	4	
R2440		VRE0034E333	M.RESISTOR CH 1/10W 33K	1	
R2441		ERJ3GEYJ473	M.RESISTOR CH 1/16W 47K	1	
R2442-44		ERJ3GEYJ223	M.RESISTOR CH 1/16W 22K	3	
R2447		ERJ3GEYJ473	M.RESISTOR CH 1/16W 47K	1	
R2448		VRE0034E223	M.RESISTOR CH 1/10W 22K	1	
R2501,02		ERJ3GEYJ123	M.RESISTOR CH 1/16W 12K	2	
R2503,04		ERJ3GEYJ824	M.RESISTOR CH 1/16W 820K	2	
R2505		ERJ3GEYJ473	M.RESISTOR CH 1/16W 47K	1	
R2506		ERJ3GEYJ223	M.RESISTOR CH 1/16W 22K	1	
R2507		ERJ3GEYJ473	M.RESISTOR CH 1/16W 47K	1	
R2508		ERJ3GEYJ223	M.RESISTOR CH 1/16W 22K	1	
R2509,10		ERJ3GEYJ272	M.RESISTOR CH 1/16W 2.7K	2	
TP2001		VJR0646	TEST POINT	1	
TP2003		VJR0646	TEST POINT	1	
TP2005		VJR0646	TEST POINT	1	
TP2101-06		VJR0646	TEST POINT	6	
TP2303-05		VJR0646	TEST POINT	3	
TP2401		VJR0646	TEST POINT	1	
TP2404		VJR0646	TEST POINT	1	
TP2501,02		VJR0646	TEST POINT	2	
TPG2001-03		VJR0646	TEST POINT	3	
X2001		VSX0519	CRYSTAL OSCILLATOR	1	
			MISCELLANEOUS		
		VML2143	LEVER. ARM.	1	
		VML2144	LEVER. ARM.	1	
		VXA4420	P.C.BOARD SHIELD PLATE	1	
		XTV3+6FFR	SCREW	5	

S5 SYSCON VEP86125B

Ref.No.		Part No.	Part Name & Description	Pcs	Remarks
S5	■	VEP86125B	P.C.BOARD W/COMPONENT		
			SYSCON		
			CAPACITORS		
C6001-04		ECUX1C104ZFV	C.CAPACITOR CH 16V 0.1U	4	
C6005		ECUX1H103ZFV	C.CAPACITOR CH 50V 0.01U	1	
C6006		ECUX1C104ZFV	C.CAPACITOR CH 16V 0.1U	1	
C6007,08		ECUX1H120JCV	C.CAPACITOR CH 50V 12P	2	
C6009		ECUX1C104ZFV	C.CAPACITOR CH 16V 0.1U	1	
C6010		ECA1HXS2R2	E.CAPACITOR 50V 2.2U	1	
C6011		ECUX1H103ZFV	C.CAPACITOR CH 50V 0.01U	1	
C6012		ECUX1C104ZFV	C.CAPACITOR CH 16V 0.1U	1	
C6013		ECA1AXS680	E.CAPACITOR 10V 68U	1	
C6014,15		ECUX1C104ZFV	C.CAPACITOR CH 16V 0.1U	2	
C6020		ECUX1C104ZFV	C.CAPACITOR CH 16V 0.1U	1	
C6021		ECUX1H470JCV	C.CAPACITOR 50V 47P	1	
C6022		VCV0041	TRIMMER	1	
C6023,24		ECUX1C104ZFV	C.CAPACITOR CH 16V 0.1U	2	
C6025		ECUX1H103ZFV	C.CAPACITOR CH 50V 0.01U	1	
C6026,27		ECUX1H101JCV	C.CAPACITOR CH 50V 100P	2	
C6028,29		ECUX1H103ZFV	C.CAPACITOR CH 50V 0.01U	2	
C6030		ECUX1C104ZFV	C.CAPACITOR CH 16V 0.1U	1	
C6031-33		ECUX1H103ZFV	C.CAPACITOR CH 50V 0.01U	3	
C6034,35		ECUX1C104ZFV	C.CAPACITOR CH 16V 0.1U	2	
C6040-65		ECUX1C104ZFV	C.CAPACITOR CH 16V 0.1U	26	
C6070-79		ECUX1H103ZFV	C.CAPACITOR CH 50V 0.01U	10	
C6080		ECUX1C104ZFV	C.CAPACITOR CH 16V 0.1U	1	
C6081,82		ECUX1H103ZFV	C.CAPACITOR CH 50V 0.01U	2	
C6083		ECUX1C104ZFV	C.CAPACITOR CH 16V 0.1U	1	
C6084-86		ECUX1H103ZFV	C.CAPACITOR CH 50V 0.01U	3	
C6100-11		ECUX1C104ZFV	C.CAPACITOR CH 16V 0.1U	12	
C6120-22		ECUX1C104ZFV	C.CAPACITOR CH 16V 0.1U	3	
C6123		ECUX1H103ZFV	C.CAPACITOR CH 50V 0.01U	1	
C6124,25		ECUX1C104ZFV	C.CAPACITOR CH 16V 0.1U	2	
C6140-42		ECUX1H103ZFV	C.CAPACITOR CH 50V 0.01U	3	
C6143		ECUX1H221JCV	C.CAPACITOR CH 50V 220P	1	
C6144,45		ECUX1H103ZFV	C.CAPACITOR CH 50V 0.01U	2	
C6146		ECUX1H221JCV	C.CAPACITOR CH 50V 220P	1	
C6147-49		ECUX1H103ZFV	C.CAPACITOR CH 50V 0.01U	3	
C6150-52		ECUX1C104ZFV	C.CAPACITOR CH 16V 0.1U	3	
C6153		ECUX1H103ZFV	C.CAPACITOR CH 50V 0.01U	1	
C6170-76		ECUX1C104ZFV	C.CAPACITOR CH 16V 0.1U	7	
C6177,78		ECUX1H100DCV	C.CAPACITOR CH 50V 10P	2	
C6179-85		ECUX1C104ZFV	C.CAPACITOR CH 16V 0.1U	7	
D6001,02		MA151K	DIODE	2	
IC6001		HD64180ZP8	IC	1	
IC6002		VSI1323	IC	1	
IC6003,04		MN4464S08L	IC	2	
IC6003,04		MN4464S-08LL	IC	2	
IC6005		DS1225Y-200	IC	1	
IC6006		HD6435328F10	IC	1	
IC6007		VSI1325	IC	1	
IC6008,09		MN4464S08L	IC	1	
IC6008,09		MN4464S-08LL	IC	2	
IC6010,11		MB89363BPF	IC	2	
IC6012,13		MB8421-90LPF	IC	2	
IC6014		TL7705CPSB	IC	1	
IC6015		MC74HC4040F	IC	1	
IC6016		MC74HC138AF	IC	1	
IC6017		MC74HC139AF	IC	1	
IC6018		UPD6456T611Y	IC	1	
IC6019		MC74HC138AF	IC	1	
IC6020		MC74HC161F	IC	1	

Ref.No.		Part No.	Part Name & Description	Pcs	Remarks
IC6021-23		MC74HC138AF	IC	3	
IC6024-26		MC74HC574AF	IC	3	
IC6027-29		MC74HC165F	IC	3	
IC6030-35		MC74HC574AF	IC	6	
IC6036-38		MC74HC165F	IC	3	
IC6039,40		MC74HC163AF	IC	2	
IC6041		UPD71054GB	IC	1	
IC6042,43		MC34051M	IC	2	
IC6044		MC74HC161F	IC	1	
IC6045		MC74HC164F	IC	1	
IC6046		MC74HC541F	IC	1	
IC6047		MC74HC244AF	IC	1	
IC6048		MC74HC153F	IC	1	
IC6049		MC74HC541F	IC	1	
IC6050,51		MC74HC4040F	IC	2	
IC6052		MC74HC165F	IC	1	
IC6053		MC14094BF	IC	1	
IC6054		MC14024BF	IC	1	
IC6055-58		MC14094BF	IC	4	
IC6059-62		MC14021BF	IC	4	
IC6063		MC74HC541F	IC	1	
IC6064		MC74HC74AF	IC	1	
IC6065		MC74HC245AF	IC	1	
IC6066,67		MC74HC541F	IC	2	
IC6068,69		SN74S1051NS	IC	2	
IC6070		TMPZ84C43AF8	IC	1	
IC6072		MC34051M	IC	1	
IC6074		MC34051M	IC	1	
IC6075		MC74HC138AF	IC	1	
IC6076		MC74HC4040F	IC	1	
IC6077		MC74HC4053F	IC	1	
IC6078		MC34051M	IC	1	
IC6079		MC74HC32AF	IC	1	
IC6080		MC74HC4050F	IC	1	
IC6081		MC74HC04AF	IC	1	
IC6082		MC74HC08AF	IC	1	
IC6083		MC74HC00AF	IC	1	
IC6084		MC74HC74AF	IC	1	
IC6085,86		MC74HC04AF	IC	2	
IC6087		MC74HC32AF	IC	1	
IC6088		MC74HC74AF	IC	1	
IC6089		MC74HC08AF	IC	1	
IC6090		MC74HC74AF	IC	1	
IC6091		MC74HCU04F	IC	1	
IC6092		MC74HC02AF	IC	1	
IC6093,94		MC74HC08AF	IC	2	
IC6095		MC1488M	IC	1	
IC6096		MC1489M	IC	1	
IC6097		MC74HC74AF	IC	1	
IC6098,99		MC74HC126AF	IC	2	
IC6100		MC74HC138AF	IC	1	
IC6102		MC74HC138AF	IC	1	
IC6103		MC74HC32AF	IC	1	
IC6104		SN74LS245NS	IC	1	
IC6105		SN74S1051NS	IC	1	
IC6106		SN74LS541NS	IC	1	
IC6107,08		SN74S1051NS	IC	2	
IC6109		SN74LS541NS	IC	1	
IC6110		MC74HC541F	IC	1	
IC6111-16		MC74HC4050F	IC	6	
ICS6001		VJS1830	CONNECTOR	1	
ICS6002		VJS2336A032	CONNECTOR (FEMALE)	1	
ICS6007		VJS2336A032	CONNECTOR (FEMALE)	1	
L6001		VLF0576	FILTER	1	
L6002		VLQ0163J270	COIL 27UH	1	
L6003-06		VLQ0576	COIL	4	
P009,10		VJP3454B096	CONNECTOR (MALE)	2	

S5

Ref.No.		Part No.	Part Name & Description	Pcs	Remarks
Q6001		UN2213	TRANSISTOR-RESISTOR	1	
Q6002,03		UN2112	TRANSISTOR-RESISTOR	2	
			RESISTORS		
R6001-10		ERJ3GEYJ104	M.RESISTOR CH 1/16W 100K	10	
R6011		ERJ3GEYJ103	M.RESISTOR CH 1/16W 10K	1	
R6012,13		ERJ3GEYJ562	M.RESISTOR CH 1/16W 5.6K	2	
R6014		ERJ3GEYJ222	M.RESISTOR CH 1/16W 2.2K	1	
R6015		ERJ3GEYJ474	M.RESISTOR CH 1/16W 470K	1	
R6020-23		ERJ3GEYJ473	M.RESISTOR CH 1/16W 47K	4	
R6024		ERJ3GEYJ562	M.RESISTOR CH 1/16W 5.6K	1	
R6025		ERJ3GEYJ103	M.RESISTOR CH 1/16W 10K	1	
R6026		ERJ3GEYJ223	M.RESISTOR CH 1/16W 22K	1	
R6027		ERJ3GEYJ103	M.RESISTOR CH 1/16W 10K	1	
R6028		ERJ3GEYJ474	M.RESISTOR CH 1/16W 470K	1	
R6029		ERJ3GEYJ103	M.RESISTOR CH 1/16W 10K	1	
R6030		ERJ3GEYJ331	M.RESISTOR CH 1/16W 330	1	
R6031		ERJ3GEYJ103	M.RESISTOR CH 1/16W 10K	1	
R6032		ERJ3GEYJ562	M.RESISTOR CH 1/16W 5.6K	1	
R6033		ERJ3GEYJ472	M.RESISTOR CH 1/16W 4.7K	1	
R6034		ERJ3GEYJ103	M.RESISTOR CH 1/16W 10K	1	
R6035		ERJ3GEYJ331	M.RESISTOR CH 1/16W 330	1	
R6036		ERJ3GEYJ103	M.RESISTOR CH 1/16W 10K	1	
R6040		ERJ3GEYJ103	M.RESISTOR CH 1/16W 10K	1	
R6070		ERJ3GEYJ681	M.RESISTOR CH 1/16W 680	1	
R6071-88		ERJ3GEYJ103	M.RESISTOR CH 1/16W 10K	18	
R6089		ERJ3GEYJ223	M.RESISTOR CH 1/16W 22K	1	
R6090		ERJ3GEYJ122	M.RESISTOR CH 1/16W 1.2K	1	
R6091		ERJ3GEYJ391	M.RESISTOR CH 1/16W 390	1	
R6092		ERJ3GEYJ681	M.RESISTOR CH 1/16W 680	1	
R6093		ERJ3GEYJ122	M.RESISTOR CH 1/16W 1.2K	1	
R6094		ERJ3GEYJ391	M.RESISTOR CH 1/16W 390	1	
R6095		ERJ3GEYJ223	M.RESISTOR CH 1/16W 22K	1	
R6096,97		ERJ3GEYJ681	M.RESISTOR CH 1/16W 680	2	
R6100		ERJ3GEYJ223	M.RESISTOR CH 1/16W 22K	1	
R6101,02		ERJ3GEYJ104	M.RESISTOR CH 1/16W 100K	2	
R6103-09		ERJ3GEYJ104	M.RESISTOR CH 1/16W 100K	7	
R6110		ERJ3GEYJ103	M.RESISTOR CH 1/16W 10K	1	
R6111		ERJ3GEYJ474	M.RESISTOR CH 1/16W 470K	1	
R6112-17		ERJ3GEYJ104	M.RESISTOR CH 1/16W 100K	6	
R6118,19		ERJ3GEYJ103	M.RESISTOR CH 1/16W 10K	2	
R6120-27		ERJ3GEYJ104	M.RESISTOR CH 1/16W 100K	8	
R6128		ERJ3GEYJ562	M.RESISTOR CH 1/16W 5.6K	1	
R6129,30		ERJ3GEYJ104	M.RESISTOR CH 1/16W 100K	2	
R6131-33		ERJ3GEYJ562	M.RESISTOR CH 1/16W 5.6K	3	
R6134-38		ERJ3GEYJ103	M.RESISTOR CH 1/16W 10K	5	
R6140-51		ERJ3GEYJ152	M.RESISTOR CH 1/16W 1.5K	12	
R6152-54		ERJ3GEYJ103	M.RESISTOR CH 1/16W 10K	3	
R6155		ERJ3GEYJ105	M.RESISTOR CH 1/16W 1M	1	
R6156		ERJ3GEYJ562	M.RESISTOR CH 1/16W 5.6K	1	
R6157,58		ERJ3GEYJ103	M.RESISTOR CH 1/16W 10K	2	
R6159		ERJ3GEYJ330	M.RESISTOR CH 1/16W 33	1	
R6170-77		ERJ3GEYJ104	M.RESISTOR CH 1/16W 100K	8	
R6178,79		ERJ3GEYJ471	M.RESISTOR CH 1/16W 470	2	
R6180-87		ERJ3GEYJ103	M.RESISTOR CH 1/16W 10K	8	
R6188		ERJ3GEY0R00	M.RESISTOR CH 1/16W 0	1	
R6189		ERJ3GEYJ103	M.RESISTOR CH 1/16W 10K	1	
SW6001		VSS0367-08B	SWITCH	1	
TP6001-04		VJR0646	TEST POINT	4	
TPG6001,02		VJR0646	TEST POINT	2	
X6001		VSX0519	CRYSTAL OSCILLATOR	1	
X6002		VSX0541	CRYSTAL OSCILLATOR	1	
X6003		VSX0519	CRYSTAL OSCILLATOR	1	

Ref.No.		Part No.	Part Name & Description	Pcs	Remarks
			MISCELLANEOUS		
		VML2143	LEVER. ARM.	1	
		VML2144	LEVER. ARM.	1	
		VXA4420	P.C.BOARD SHIELD PLATE	1	
		XTV3+6FFR	SCREW	5	

S8 AUDIO D/A VEP84155A

Ref.No.		Part No.	Part Name & Description	Pcs	Remarks
S8	■	VEP84155A	P.C.BOARD W/COMPONENT		
			AUDIO D/A		
			CAPACITORS		
C4001		ECA1HAXL2R2	.CAPACITOR V	1	
C4002		ECA1CAXL220	.CAPACITOR V	1	
C4003		ECUM1H391JCN	C.CAPACITOR CH 50V 390P	1	
C4004-06		ECUM1H102JCN	C.CAPACITOR CH 50V 1000P	3	
C4007		ECA1CAXN330	.CAPACITOR V	1	
C4008		ECHU1C472G	P.CAPACITOR 16V 4700P	1	
C4009,10		ECA1CAXN330	.CAPACITOR V	2	
C4011		ECUM1H470JCN	C.CAPACITOR CH 50V 47P	1	
C4012,13		ECA1EAXL100	.CAPACITOR V	2	
C4014,15		ECA1EAXL101	.CAPACITOR V	2	
C4016		ECUM1H470JCN	C.CAPACITOR CH 50V 47P	1	
C4017,18		ECA1EAXL100	.CAPACITOR V	2	
C4019,20		ECA1EAXL101	.CAPACITOR V	2	
C4021-30		ECUM1E104ZFN	C.CAPACITOR CH 25V 0.1U	10	
C4040		ECA1EAXL101	.CAPACITOR V	1	
C4041,42		ECUM1E104ZFN	C.CAPACITOR CH 25V 0.1U	2	
C4044		ECUM1E104ZFN	C.CAPACITOR CH 25V 0.1U	1	
C4045,46		ECA1EAXL101	.CAPACITOR V	2	
C4047,48		ECUM1E104ZFN	C.CAPACITOR CH 25V 0.1U	2	
C4050		ECUM1E104ZFN	C.CAPACITOR CH 25V 0.1U	1	
C4051		ECA1EAXL101	.CAPACITOR V	1	
C4062,63		ECUM1E104ZFN	C.CAPACITOR CH 25V 0.1U	2	
C4065		ECUM1E104ZFN	C.CAPACITOR CH 25V 0.1U	1	
C4066		ECA1EAXL101	.CAPACITOR V	1	
C4068,69		ECUM1E104ZFN	C.CAPACITOR CH 25V 0.1U	2	
C4071		ECUM1E104ZFN	C.CAPACITOR CH 25V 0.1U	1	
C4072		ECA1AAXL101	.CAPACITOR V	1	
C4073,74		ECUM1E104ZFN	C.CAPACITOR CH 25V 0.1U	2	
C4076,77		ECUM1E104ZFN	C.CAPACITOR CH 25V 0.1U	2	
C4079		ECUM1E104ZFN	C.CAPACITOR CH 25V 0.1U	1	
C4080		ECA1EAXL101	.CAPACITOR V	1	
C4081		ECA1HAXL2R2	.CAPACITOR V	1	
C4082		ECA1CAXL220	.CAPACITOR V	1	
C4083		ECUM1H391JCN	C.CAPACITOR CH 50V 390P	1	
C4084-86		ECUM1H102JCN	C.CAPACITOR CH 50V 1000P	3	
C4087		ECA1CAXN330	.CAPACITOR V	1	
C4088		ECHU1C472G	P.CAPACITOR 16V 4700P	1	
C4089,90		ECA1CAXN330	.CAPACITOR V	2	
C4091		ECUM1H470JCN	C.CAPACITOR CH 50V 47P	1	
C4092,93		ECA1EAXL100	.CAPACITOR V	2	
C4094,95		ECA1EAXL101	.CAPACITOR V	2	
C4096		ECUM1H470JCN	C.CAPACITOR CH 50V 47P	1	
C4097,98		ECA1EAXL100	.CAPACITOR V	2	
C4099,00		ECA1EAXL101	.CAPACITOR V	2	
C4101-10		ECUM1E104ZFN	C.CAPACITOR CH 25V 0.1U	10	
C4120		ECA1EAXL101	.CAPACITOR V	1	
C4121,22		ECUM1E104ZFN	C.CAPACITOR CH 25V 0.1U	2	
C4124		ECUM1E104ZFN	C.CAPACITOR CH 25V 0.1U	1	
C4125,26		ECA1EAXL101	.CAPACITOR V	2	
C4127,28		ECUM1E104ZFN	C.CAPACITOR CH 25V 0.1U	2	
C4130		ECUM1E104ZFN	C.CAPACITOR CH 25V 0.1U	1	
C4131		ECA1EAXL101	.CAPACITOR V	1	
C4141		ECA1HAXL2R2	.CAPACITOR V	1	
C4142		ECA1CAXL220	.CAPACITOR V	1	
C4143		ECUM1H391JCN	C.CAPACITOR CH 50V 390P	1	
C4144-46		ECUM1H102JCN	C.CAPACITOR CH 50V 1000P	3	
C4147		ECA1CAXN330	.CAPACITOR V	1	
C4148		ECHU1C472G	P.CAPACITOR 16V 4700P	1	
C4149,50		ECA1CAXN330	.CAPACITOR V	2	
C4151		ECUM1H470JCN	C.CAPACITOR CH 50V 47P	1	
C4152,53		ECA1EAXL100	.CAPACITOR V	2	
C4154,55		ECA1EAXL101	.CAPACITOR V	2	
C4156		ECUM1H470JCN	C.CAPACITOR CH 50V 47P	1	
C4157,58		ECA1EAXL100	.CAPACITOR V	2	
C4159,60		ECA1EAXL101	.CAPACITOR V	2	

Ref.No.		Part No.	Part Name & Description	Pcs	Remarks
C4161-70		ECUM1E104ZFN	C.CAPACITOR CH 25V 0.1U	10	
C4180		ECA1EAXL101	.CAPACITOR V	1	
C4181,82		ECUM1E104ZFN	C.CAPACITOR CH 25V 0.1U	2	
C4184		ECUM1E104ZFN	C.CAPACITOR CH 25V 0.1U	1	
C4185,86		ECA1EAXL101	.CAPACITOR V	2	
C4187,88		ECUM1E104ZFN	C.CAPACITOR CH 25V 0.1U	2	
C4190		ECUM1E104ZFN	C.CAPACITOR CH 25V 0.1U	1	
C4191		ECA1EAXL101	.CAPACITOR V	1	
C4203		ECUM1E104ZFN	C.CAPACITOR CH 25V 0.1U	1	
C4205		ECUM1E104ZFN	C.CAPACITOR CH 25V 0.1U	1	
C4206		ECA1EAXL101	.CAPACITOR V	1	
C4209		ECUM1E104ZFN	C.CAPACITOR CH 25V 0.1U	1	
C4211		ECUM1E104ZFN	C.CAPACITOR CH 25V 0.1U	1	
C4212		ECA1AAXL101	.CAPACITOR V	1	
C4213,14		ECUM1E104ZFN	C.CAPACITOR CH 25V 0.1U	2	
C4217		ECUM1E104ZFN	C.CAPACITOR CH 25V 0.1U	1	
C4219		ECUM1E104ZFN	C.CAPACITOR CH 25V 0.1U	1	
C4220		ECA1EAXL101	.CAPACITOR V	1	
C4221		ECA1HAXL2R2	.CAPACITOR V	1	
C4222		ECA1CAXL220	.CAPACITOR V	1	
C4223		ECUM1H391JCN	C.CAPACITOR CH 50V 390P	1	
C4224-26		ECUM1H102JCN	C.CAPACITOR CH 50V 1000P	3	
C4227		ECA1CAXN330	.CAPACITOR V	1	
C4228		ECHU1C472G	P.CAPACITOR 16V 4700P	1	
C4229,30		ECA1CAXN330	.CAPACITOR V	2	
C4231		ECUM1H470JCN	C.CAPACITOR CH 50V 47P	1	
C4232,33		ECA1EAXL100	.CAPACITOR V	2	
C4234,35		ECA1EAXL101	.CAPACITOR V	2	
C4236		ECUM1H470JCN	C.CAPACITOR CH 50V 47P	1	
C4237,38		ECA1EAXL100	.CAPACITOR V	2	
C4239,40		ECA1EAXL101	.CAPACITOR V	2	
C4241-50		ECUM1E104ZFN	C.CAPACITOR CH 25V 0.1U	10	
C4260		ECA1EAXL101	.CAPACITOR V	1	
C4261,62		ECUM1E104ZFN	C.CAPACITOR CH 25V 0.1U	2	
C4264		ECUM1E104ZFN	C.CAPACITOR CH 25V 0.1U	1	
C4265,66		ECA1EAXL101	.CAPACITOR V	2	
C4267,68		ECUM1E104ZFN	C.CAPACITOR CH 25V 0.1U	2	
C4270		ECUM1E104ZFN	C.CAPACITOR CH 25V 0.1U	1	
C4271		ECA1EAXL101	.CAPACITOR V	1	
C4281		ECA1HAXL2R2	.CAPACITOR V	1	
C4282		ECA1CAXL220	.CAPACITOR V	1	
C4283		ECUM1H391JCN	C.CAPACITOR CH 50V 390P	1	
C4284-86		ECUM1H102JCN	C.CAPACITOR CH 50V 1000P	3	
C4287		ECA1CAXN330	.CAPACITOR V	1	
C4288		ECHU1C472G	P.CAPACITOR 16V 4700P	1	
C4289,90		ECA1CAXN330	.CAPACITOR V	2	
C4291		ECUM1H470JCN	C.CAPACITOR CH 50V 47P	1	
C4292,93		ECA1EAXL100	.CAPACITOR V	2	
C4294,95		ECA1EAXL101	.CAPACITOR V	2	
C4296		ECUM1H470JCN	C.CAPACITOR CH 50V 47P	1	
C4297,98		ECA1EAXL100	.CAPACITOR V	2	
C4299,00		ECA1EAXL101	.CAPACITOR V	2	
C4301-10		ECUM1E104ZFN	C.CAPACITOR CH 25V 0.1U	10	
C4320		ECA1EAXL101	.CAPACITOR V	1	
C4321,22		ECUM1E104ZFN	C.CAPACITOR CH 25V 0.1U	2	
C4324		ECUM1E104ZFN	C.CAPACITOR CH 25V 0.1U	1	
C4325		ECA1EAXL101	.CAPACITOR V	1	
C4343		ECUM1E104ZFN	C.CAPACITOR CH 25V 0.1U	1	
C4345		ECUM1E104ZFN	C.CAPACITOR CH 25V 0.1U	1	
C4346		ECA1EAXL101	.CAPACITOR V	1	
C4349		ECUM1E104ZFN	C.CAPACITOR CH 25V 0.1U	1	
C4351		ECUM1E104ZFN	C.CAPACITOR CH 25V 0.1U	1	
C4352		ECA1AAXL101	.CAPACITOR V	1	
C4353,54		ECUM1E104ZFN	C.CAPACITOR CH 25V 0.1U	2	
C4357		ECUM1E104ZFN	C.CAPACITOR CH 25V 0.1U	1	
C4359		ECUM1E104ZFN	C.CAPACITOR CH 25V 0.1U	1	
C4360		ECA1EAXL101	.CAPACITOR V	1	
C4361		ECA1HAXL2R2	.CAPACITOR V	1	
C4362		ECA1CAXL220	.CAPACITOR V	1	
C4363		ECUM1H391JCN	C.CAPACITOR CH 50V 390P	1	
C4364-66		ECUM1H102JCN	C.CAPACITOR CH 50V 1000P	3	
C4367		ECA1CAXN330	.CAPACITOR V	1	
C4368		ECHU1C472G	P.CAPACITOR 16V 4700P	1	
C4369,70		ECA1CAXN330	.CAPACITOR V	2	
C4371		ECUM1H470JCN	C.CAPACITOR CH 50V 47P	1	

S8

Ref.No.		Part No.	Part Name & Description	Pcs	Remarks
C4372,73		ECA1EAXL100	.CAPACITOR V	2	
C4374,75		ECA1EAXL101	.CAPACITOR V	2	
C4376		ECUM1H470JCN	C.CAPACITOR CH 50V 47P	1	
C4377,78		ECA1EAXL100	.CAPACITOR V	2	
C4379,80		ECA1EAXL101	.CAPACITOR V	2	
C4381-90		ECUM1E104ZFN	C.CAPACITOR CH 25V 0.1U	10	
C4406		ECA1EAXL101	.CAPACITOR V	1	
C4407,08		ECUM1E104ZFN	C.CAPACITOR CH 25V 0.1U	2	
C4410		ECUM1E104ZFN	C.CAPACITOR CH 25V 0.1U	1	
C4411		ECA1EAXL101	.CAPACITOR V	1	
C4421,22		ECA1CAXN330	.CAPACITOR V	2	
C4423,24		ECUM1E104ZFN	C.CAPACITOR CH 25V 0.1U	2	
C4425,26		ECA1CAXN330	.CAPACITOR V	2	
C4427,28		ECUM1E104ZFN	C.CAPACITOR CH 25V 0.1U	2	
C4431		ECUM1H330JCN	C.CAPACITOR CH 50V 33P	1	
C4432-35		ECUM1E104ZFN	C.CAPACITOR CH 25V 0.1U	4	
C4436		ECA1EAXL100	.CAPACITOR V	1	
C4437		ECUM1H330JCN	C.CAPACITOR CH 50V 33P	1	
C4438-41		ECUM1E104ZFN	C.CAPACITOR CH 25V 0.1U	4	
C4442,43		ECA1EAXL100	.CAPACITOR V	2	
C4444		ECUM1H220JCN	C.CAPACITOR CH 50V 22P	1	
C4445		ECA1CAXL221C	.CAPACITOR V	1	
C4446		ECA1EAXL100	.CAPACITOR V	1	
C4447		ECUM1H220JCN	C.CAPACITOR CH 50V 22P	1	
C4448		ECA1CAXL221C	.CAPACITOR V	1	
C4449		ECA1HAXL010F	.CAPACITOR V	1	
C4456-66		ECUM1H103ZFN	C.CAPACITOR CH 50V 0.01U	11	
C4468-71		ECUM1H103ZFN	C.CAPACITOR CH 50V 0.01U	4	
C4472		ECUM1H101JCN	C.CAPACITOR CH 50V 100P	1	
C4473-82		ECUM1H103ZFN	C.CAPACITOR CH 50V 0.01U	10	
C4483,84		ECA1AAXL101	.CAPACITOR V	2	
D4001		MA151K	DIODE	1	
D4002,03		MA157	DIODE	2	
D4004,05		MA151K	DIODE	2	
D4006,07		MA157	DIODE	2	
D4008,09		MA151K	DIODE	2	
D4010,11		MA157	DIODE	2	
D4012,13		MA151K	DIODE	2	
D4014,15		MA157	DIODE	2	
D4016,17		MA151K	DIODE	2	
D4018,19		MA157	DIODE	2	
D4020,21		MA151K	DIODE	2	
D4022,23		MA157	DIODE	2	
D4024-27		MA151K	DIODE	4	
FL4001-03		VLF0576	FILTER	3	
FL4006,07		VLF0576	FILTER	2	
FL4012,13		VLF0576	FILTER	2	
FL4021,22		VLF0576	FILTER	2	
FL4027,28		VLF0576	FILTER	2	
FL4036		VLF0576	FILTER	1	
FL4043		VLF0576	FILTER	1	
FL4046		VLF0931	COIL	1	
FL4047		VLF0576	FILTER	1	
IC4001		YSF210BM	IC	1	
IC4002		AD1862NJ	IC	1	
IC4003,04		NJM4580ED	IC	2	
IC4005		NJM2043MD	IC	1	
IC4006		AD1862NJ	IC	1	
IC4007,08		NJM4580ED	IC	2	
IC4009		NJM2043MD	IC	1	
IC4010		NJM78L12UA	IC	1	
IC4011		NJM78L05UA	IC	1	
IC4012		NJM79L12UA	IC	1	
IC4014		AN78N12	IC	1	
IC4015		AN79N12	IC	1	
IC4018		AN78N12	IC	1	

Ref.No.		Part No.	Part Name & Description	Pcs	Remarks
IC4019		AN79N12	IC	1	
IC4021		YSF210BM	IC	1	
IC4022		AD1862NJ	IC	1	
IC4023,24		NJM4580ED	IC	2	
IC4025		NJM2043MD	IC	1	
IC4026		AD1862NJ	IC	1	
IC4027,28		NJM4580ED	IC	2	
IC4029		NJM2043MD	IC	1	
IC4030		NJM78L12UA	IC	1	
IC4031		NJM78L05UA	IC	1	
IC4032		NJM79L12UA	IC	1	
IC4034		AN78N12	IC	1	
IC4035		AN79N12	IC	1	
IC4038		AN78N12	IC	1	
IC4039		AN79N12	IC	1	
IC4041		YSF210BM	IC	1	
IC4042		AD1862NJ	IC	1	
IC4043,44		NJM4580ED	IC	2	
IC4045		NJM2043MD	IC	1	
IC4046		AD1862NJ	IC	1	
IC4047,48		NJM4580ED	IC	2	
IC4049		NJM2043MD	IC	1	
IC4050		NJM78L12UA	IC	1	
IC4051		NJM78L05UA	IC	1	
IC4052		NJM79L12UA	IC	1	
IC4054		AN78N12	IC	1	
IC4059		AN79N12	IC	1	
IC4061-63		NJM4580ED	IC	3	
IC4064		AD7538JR	IC	1	
IC4065		NJM4580ED	IC	1	
IC4066		AD7538JR	IC	1	
IC4067		M5206P	IC	1	
IC4068		AN6558	IC	1	
IC4069		NJM2904M	IC	1	
IC4070		MC10125L	IC	1	
IC4071		SN74HCT541N	IC	1	
IC4072		SN74ALS541NS	IC	1	
IC4073		MC74HC04AF	IC	1	
IC4074		SN74HCT541N	IC	1	
IC4075		MC74HC157AF	IC	1	
IC4076-78		SN74LS541NS	IC	3	
IC4079		MC74HC574AF	IC	1	
IC4081		MC74HC04AF	IC	1	
IC4082		MC74HC138AF	IC	1	
IC4083		SN74HCT541N	IC	1	
IC4084		MC74HC138AF	IC	1	
IC4085		SN74HCT541N	IC	1	
IC4086		MC74HC138AF	IC	1	
IC4087,88		SN74S1051NS	IC	2	
IC4089,90		UPD71055GB	IC	2	
IC4091		SN74HCT541N	IC	1	
IC4092		SN74S1051NS	IC	1	
IC4093		SN74HCT541N	IC	1	
P015,16		VJP3454B096	CONNECTOR (MALE)	2	
P4001-06		VJP1230T	CONNECTOR (MALE) 3P	6	
Q4001		UN2213	TRANSISTOR-RESISTOR	1	
Q4002		2SD601-R	TRANSISTOR CHIP	1	(R)
Q4003		2SD1994A-QR	TRANSISTOR	1	
Q4004		2SB1322A-QR	TRANSISTOR	1	
Q4005		2SD1994A-QR	TRANSISTOR	1	
Q4006		2SB1322A-QR	TRANSISTOR	1	
Q4007		2SD601-R	TRANSISTOR CHIP	1	(R)
Q4008		UN2213	TRANSISTOR-RESISTOR	1	
Q4009		2SD601-R	TRANSISTOR CHIP	1	(R)
Q4010		2SD1994A-QR	TRANSISTOR	1	
Q4011		2SB1322A-QR	TRANSISTOR	1	
Q4012		2SD1994A-QR	TRANSISTOR	1	
Q4013		2SB1322A-QR	TRANSISTOR	1	
Q4014		2SD601-R	TRANSISTOR CHIP	1	(R)

Ref.No.		Part No.	Part Name & Description	Pcs	Remarks
Q4015		UN2213	TRANSISTOR-RESISTOR	1	
Q4016		2SD601-R	TRANSISTOR CHIP	1	(R)
Q4017		2SD1994A-QR	TRANSISTOR	1	
Q4018		2SB1322A-QR	TRANSISTOR	1	
Q4019		2SD1994A-QR	TRANSISTOR	1	
Q4020		2SB1322A-QR	TRANSISTOR	1	
Q4021		2SD601-R	TRANSISTOR CHIP	1	(R)
Q4022		UN2213	TRANSISTOR-RESISTOR	1	
Q4023		2SD601-R	TRANSISTOR CHIP	1	(R)
Q4024		2SD1994A-QR	TRANSISTOR	1	
Q4025		2SB1322A-QR	TRANSISTOR	1	
Q4026		2SD1994A-QR	TRANSISTOR	1	
Q4027		2SB1322A-QR	TRANSISTOR	1	
Q4028		2SD601-R	TRANSISTOR CHIP	1	(R)
Q4029		UN2213	TRANSISTOR-RESISTOR	1	
Q4030		2SD601-R	TRANSISTOR CHIP	1	(R)
Q4031		2SD1994A-QR	TRANSISTOR	1	
Q4032		2SB1322A-QR	TRANSISTOR	1	
Q4033		2SD1994A-QR	TRANSISTOR	1	
Q4034		2SB1322A-QR	TRANSISTOR	1	
Q4035		2SD601-R	TRANSISTOR CHIP	1	(R)
Q4036		UN2213	TRANSISTOR-RESISTOR	1	
Q4037		2SD601-R	TRANSISTOR CHIP	1	(R)
Q4038		2SD1994A-QR	TRANSISTOR	1	
Q4039		2SB1322A-QR	TRANSISTOR	1	
Q4040		2SD1994A-QR	TRANSISTOR	1	
Q4041		2SB1322A-QR	TRANSISTOR	1	
Q4042		2SD601-R	TRANSISTOR CHIP	1	(R)
Q4043		UN2213	TRANSISTOR-RESISTOR	1	
Q4044		2SD601-R	TRANSISTOR CHIP	1	(R)
Q4045		UN2213	TRANSISTOR-RESISTOR	1	
Q4046		2SD601-R	TRANSISTOR CHIP	1	(R)
Q4047		UN2213	TRANSISTOR-RESISTOR	1	
Q4048		2SD601-R	TRANSISTOR CHIP	1	(R)
			RESISTORS		
R4001,02		ERJ6GEYJ474	M.RESISTOR CH 1/10W 470K	2	
R4003-05		ERJ6GEYJ471	M.RESISTOR CH 1/10W 470	3	
R4006,07		VRE0034E332	M.RESISTOR CH 1/10W 3.3K	2	
R4008		VRE0034E102	M.RESISTOR CH 1/10W 1K	1	
R4009,10		VRE0034E472	M.RESISTOR CH 1/10W 4.7K	2	
R4011,12		ERJ6GEYJ103	M.RESISTOR CH 1/10W 10K	2	
R4013		VRE0034E223	M.RESISTOR CH 1/10W 22K	1	
R4014		VRE0034E222	M.RESISTOR CH 1/10W 2.2K	1	
R4015		VRE0034E102	M.RESISTOR CH 1/10W 1K	1	
R4016		VRE0034E123	M.RESISTOR CH 1/10W 12K	1	
R4017		VRE0034E472	M.RESISTOR CH 1/10W 4.7K	1	
R4018		ERJ6GEYJ105	M.RESISTOR CH 1/10W 1M	1	
R4019		VRE0034E103	M.RESISTOR CH 1/10W 10K	1	
R4020		VRE0034E79C	M.RESISTOR CH 1/10W	1	
R4021		VRE0034E60B	M.RESISTOR CH 1/10W 6	1	
R4022		ERJ6GEY0R00	M.RESISTOR CH 1/10W 0	1	
R4023		VRE0034E20B	M.RESISTOR CH 1/10W 2	1	
R4024		VRE0034E272	M.RESISTOR CH 1/10W 2.7K	1	
R4025		VRE0034E472	M.RESISTOR CH 1/10W 4.7K	1	
R4026		VRE0034E682	M.RESISTOR CH 1/10W 6.8K	1	
R4027		VRE0034E103	M.RESISTOR CH 1/10W 10K	1	
R4028,29		VRE0034E472	M.RESISTOR CH 1/10W 4.7K	2	
R4030		ERJ6GEYJ105	M.RESISTOR CH 1/10W 1M	1	
R4031,32		VRE0034E153	M.RESISTOR CH 1/10W 15K	2	
R4033		VRE0034E150	M.RESISTOR CH 1/10W 15	1	
R4034		ERJ6GEYJ100	M.RESISTOR CH 1/10W 10	1	
R4035,36		ERJ6GEYJ562	M.RESISTOR CH 1/10W 5.6K	2	
R4037,38		ERJ14YJ100	M.RESISTOR 1/4W 10	2	
R4039		ERJ14YJ220	M.RESISTOR 1/4W 22	1	
R4040		ERJ6GEYJ103	M.RESISTOR CH 1/10W 10K	1	
R4041,42		VRE0034E472	M.RESISTOR CH 1/10W 4.7K	2	
R4043		ERJ6GEYJ105	M.RESISTOR CH 1/10W 1M	1	
R4044,45		VRE0034E153	M.RESISTOR CH 1/10W 15K	2	
R4047		ERJ6GEYJ100	M.RESISTOR CH 1/10W 10	1	
R4048,49		ERJ6GEYJ562	M.RESISTOR CH 1/10W 5.6K	2	
R4050,51		ERJ14YJ100	M.RESISTOR 1/4W 10	2	
R4052		ERJ14YJ220	M.RESISTOR 1/4W 22	1	

Ref.No.		Part No.	Part Name & Description	Pcs	Remarks
R4053		ERJ6GEYJ103	M.RESISTOR CH 1/10W 10K	1	
R4054		ERJ6GEYJ473	M.RESISTOR CH 1/10W 47K	1	
R4055		ERJ6GEYJ681	M.RESISTOR CH 1/10W 680	1	
R4056-60		ERJ6GEY0R00	M.RESISTOR CH 1/10W 0	5	
R4061,62		ERJ6GEYJ474	M.RESISTOR CH 1/10W 470K	2	
R4063-65		ERJ6GEYJ471	M.RESISTOR CH 1/10W 470	3	
R4066,67		VRE0034E332	M.RESISTOR CH 1/10W 3.3K	2	
R4068		VRE0034E102	M.RESISTOR CH 1/10W 1K	1	
R4069,70		VRE0034E472	M.RESISTOR CH 1/10W 4.7K	2	
R4071,72		ERJ6GEYJ103	M.RESISTOR CH 1/10W 10K	2	
R4073		VRE0034E223	M.RESISTOR CH 1/10W 22K	1	
R4074		VRE0034E222	M.RESISTOR CH 1/10W 2.2K	1	
R4075		VRE0034E102	M.RESISTOR CH 1/10W 1K	1	
R4076		VRE0034E123	M.RESISTOR CH 1/10W 12K	1	
R4077		VRE0034E472	M.RESISTOR CH 1/10W 4.7K	1	
R4078		ERJ6GEYJ105	M.RESISTOR CH 1/10W 1M	1	
R4079		VRE0034E103	M.RESISTOR CH 1/10W 10K	1	
R4080		VRE0034E79C	M.RESISTOR CH 1/10W	1	
R4081		VRE0034E60B	M.RESISTOR CH 1/10W 6	1	
R4082		ERJ6GEY0R00	M.RESISTOR CH 1/10W 0	1	
R4083		VRE0034E20B	M.RESISTOR CH 1/10W 2	1	
R4084		VRE0034E272	M.RESISTOR CH 1/10W 2.7K	1	
R4085		VRE0034E472	M.RESISTOR CH 1/10W 4.7K	1	
R4086		VRE0034E682	M.RESISTOR CH 1/10W 6.8K	1	
R4087		VRE0034E103	M.RESISTOR CH 1/10W 10K	1	
R4088,89		VRE0034E472	M.RESISTOR CH 1/10W 4.7K	2	
R4090		ERJ6GEYJ105	M.RESISTOR CH 1/10W 1M	1	
R4091,92		VRE0034E153	M.RESISTOR CH 1/10W 15K	2	
R4093		VRE0034E150	M.RESISTOR CH 1/10W 15	1	
R4094		ERJ6GEYJ100	M.RESISTOR CH 1/10W 10	1	
R4095,96		ERJ6GEYJ562	M.RESISTOR CH 1/10W 5.6K	2	
R4097,98		ERJ14YJ100	M.RESISTOR 1/4W 10	2	
R4099		ERJ14YJ220	M.RESISTOR 1/4W 22	1	
R4100		ERJ6GEYJ103	M.RESISTOR CH 1/10W 10K	1	
R4101,02		VRE0034E472	M.RESISTOR CH 1/10W 4.7K	2	
R4103		ERJ6GEYJ105	M.RESISTOR CH 1/10W 1M	1	
R4104,05		VRE0034E153	M.RESISTOR CH 1/10W 15K	2	
R4107		ERJ6GEYJ100	M.RESISTOR CH 1/10W 10	1	
R4108,09		ERJ6GEYJ562	M.RESISTOR CH 1/10W 5.6K	2	
R4110,11		ERJ14YJ100	M.RESISTOR 1/4W 10	2	
R4112		ERJ14YJ220	M.RESISTOR 1/4W 22	1	
R4113		ERJ6GEYJ103	M.RESISTOR CH 1/10W 10K	1	
R4114		ERJ6GEYJ473	M.RESISTOR CH 1/10W 47K	1	
R4115		ERJ6GEYJ681	M.RESISTOR CH 1/10W 680	1	
R4116-20		ERJ6GEY0R00	M.RESISTOR CH 1/10W 0	5	
R4121,22		ERJ6GEYJ474	M.RESISTOR CH 1/10W 470K	2	
R4123-25		ERJ6GEYJ471	M.RESISTOR CH 1/10W 470	3	
R4126,27		VRE0034E332	M.RESISTOR CH 1/10W 3.3K	2	
R4128		VRE0034E102	M.RESISTOR CH 1/10W 1K	1	
R4129,30		VRE0034E472	M.RESISTOR CH 1/10W 4.7K	2	
R4131,32		ERJ6GEYJ103	M.RESISTOR CH 1/10W 10K	2	
R4133		VRE0034E223	M.RESISTOR CH 1/10W 22K	1	
R4134		VRE0034E222	M.RESISTOR CH 1/10W 2.2K	1	
R4135		VRE0034E102	M.RESISTOR CH 1/10W 1K	1	
R4136		VRE0034E123	M.RESISTOR CH 1/10W 12K	1	
R4137		VRE0034E472	M.RESISTOR CH 1/10W 4.7K	1	
R4138		ERJ6GEYJ105	M.RESISTOR CH 1/10W 1M	1	
R4139		VRE0034E103	M.RESISTOR CH 1/10W 10K	1	
R4140		VRE0034E79C	M.RESISTOR CH 1/10W	1	
R4141		VRE0034E60B	M.RESISTOR CH 1/10W 6	1	
R4142		ERJ6GEY0R00	M.RESISTOR CH 1/10W 0	1	
R4143		VRE0034E20B	M.RESISTOR CH 1/10W 2	1	
R4144		VRE0034E272	M.RESISTOR CH 1/10W 2.7K	1	
R4145		VRE0034E472	M.RESISTOR CH 1/10W 4.7K	1	
R4146		VRE0034E682	M.RESISTOR CH 1/10W 6.8K	1	
R4147		VRE0034E103	M.RESISTOR CH 1/10W 10K	1	
R4148,49		VRE0034E472	M.RESISTOR CH 1/10W 4.7K	2	
R4150		ERJ6GEYJ105	M.RESISTOR CH 1/10W 1M	1	
R4151,52		VRE0034E153	M.RESISTOR CH 1/10W 15K	2	
R4153		VRE0034E150	M.RESISTOR CH 1/10W 15	1	
R4154		ERJ6GEYJ100	M.RESISTOR CH 1/10W 10	1	
R4155,56		ERJ6GEYJ562	M.RESISTOR CH 1/10W 5.6K	2	
R4157,58		ERJ14YJ100	M.RESISTOR 1/4W 10	2	
R4159		ERJ14YJ220	M.RESISTOR 1/4W 22	1	
R4160		ERJ6GEYJ103	M.RESISTOR CH 1/10W 10K	1	

Ref.No.		Part No.	Part Name & Description	Pcs	Remarks
R4161,62		VRE0034E472	M.RESISTOR CH 1/10W 4.7K	2	
R4163		ERJ6GEYJ105	M.RESISTOR CH 1/10W 1M	1	
R4164,65		VRE0034E153	M.RESISTOR CH 1/10W 15K	2	
R4167		ERJ6GEYJ100	M.RESISTOR CH 1/10W 10	1	
R4168,69		ERJ6GEYJ562	M.RESISTOR CH 1/10W 5.6K	2	
R4170,71		ERJ14YJ100	M.RESISTOR 1/4W 10	2	
R4172		ERJ14YJ220	M.RESISTOR 1/4W 22	1	
R4173		ERJ6GEYJ103	M.RESISTOR CH 1/10W 10K	1	
R4174		ERJ6GEYJ473	M.RESISTOR CH 1/10W 47K	1	
R4175		ERJ6GEYJ681	M.RESISTOR CH 1/10W 680	1	
R4176-80		ERJ6GEY0R00	M.RESISTOR CH 1/10W 0	5	
R4181,82		ERJ6GEYJ474	M.RESISTOR CH 1/10W 470K	2	
R4183-85		ERJ6GEYJ471	M.RESISTOR CH 1/10W 470	3	
R4186,87		VRE0034E332	M.RESISTOR CH 1/10W 3.3K	2	
R4188		VRE0034E102	M.RESISTOR CH 1/10W 1K	1	
R4189,90		VRE0034E472	M.RESISTOR CH 1/10W 4.7K	2	
R4191,92		ERJ6GEYJ103	M.RESISTOR CH 1/10W 10K	2	
R4193		VRE0034E223	M.RESISTOR CH 1/10W 22K	1	
R4194		VRE0034E222	M.RESISTOR CH 1/10W 2.2K	1	
R4195		VRE0034E102	M.RESISTOR CH 1/10W 1K	1	
R4196		VRE0034E123	M.RESISTOR CH 1/10W 12K	1	
R4197		VRE0034E472	M.RESISTOR CH 1/10W 4.7K	1	
R4198		ERJ6GEYJ105	M.RESISTOR CH 1/10W 1M	1	
R4199		VRE0034E103	M.RESISTOR CH 1/10W 10K	1	
R4200		VRE0034E79C	M.RESISTOR CH 1/10W	1	
R4201		VRE0034E60B	M.RESISTOR CH 1/10W 6	1	
R4202		ERJ6GEY0R00	M.RESISTOR CH 1/10W 0	1	
R4203		VRE0034E20B	M.RESISTOR CH 1/10W 2	1	
R4204		VRE0034E272	M.RESISTOR CH 1/10W 2.7K	1	
R4205		VRE0034E472	M.RESISTOR CH 1/10W 4.7K	1	
R4206		VRE0034E682	M.RESISTOR CH 1/10W 6.8K	1	
R4207		VRE0034E103	M.RESISTOR CH 1/10W 10K	1	
R4208,09		VRE0034E472	M.RESISTOR CH 1/10W 4.7K	2	
R4210		ERJ6GEYJ105	M.RESISTOR CH 1/10W 1M	1	
R4211,12		VRE0034E153	M.RESISTOR CH 1/10W 15K	2	
R4213		VRE0034E150	M.RESISTOR CH 1/10W 15	1	
R4214		ERJ6GEYJ100	M.RESISTOR CH 1/10W 10	1	
R4215,16		ERJ6GEYJ562	M.RESISTOR CH 1/10W 5.6K	2	
R4217,18		ERJ14YJ100	M.RESISTOR 1/4W 10	2	
R4219		ERJ14YJ220	M.RESISTOR 1/4W 22	1	
R4220		ERJ6GEYJ103	M.RESISTOR CH 1/10W 10K	1	
R4221,22		VRE0034E472	M.RESISTOR CH 1/10W 4.7K	2	
R4223		ERJ6GEYJ105	M.RESISTOR CH 1/10W 1M	1	
R4224,25		VRE0034E153	M.RESISTOR CH 1/10W 15K	2	
R4227		ERJ6GEYJ100	M.RESISTOR CH 1/10W 10	1	
R4228,29		ERJ6GEYJ562	M.RESISTOR CH 1/10W 5.6K	2	
R4230,31		ERJ14YJ100	M.RESISTOR 1/4W 10	2	
R4232		ERJ14YJ220	M.RESISTOR 1/4W 22	1	
R4233		ERJ6GEYJ103	M.RESISTOR CH 1/10W 10K	1	
R4234		ERJ6GEYJ473	M.RESISTOR CH 1/10W 47K	1	
R4235		ERJ6GEYJ681	M.RESISTOR CH 1/10W 680	1	
R4236-40		ERJ6GEY0R00	M.RESISTOR CH 1/10W 0	5	
R4241,42		ERJ6GEYJ474	M.RESISTOR CH 1/10W 470K	2	
R4243-45		ERJ6GEYJ471	M.RESISTOR CH 1/10W 470	3	
R4246,47		VRE0034E332	M.RESISTOR CH 1/10W 3.3K	2	
R4248		VRE0034E102	M.RESISTOR CH 1/10W 1K	1	
R4249,50		VRE0034E472	M.RESISTOR CH 1/10W 4.7K	2	
R4251,52		ERJ6GEYJ103	M.RESISTOR CH 1/10W 10K	2	
R4253		VRE0034E223	M.RESISTOR CH 1/10W 22K	1	
R4254		VRE0034E222	M.RESISTOR CH 1/10W 2.2K	1	
R4255		VRE0034E102	M.RESISTOR CH 1/10W 1K	1	
R4256		VRE0034E123	M.RESISTOR CH 1/10W 12K	1	
R4257		VRE0034E472	M.RESISTOR CH 1/10W 4.7K	1	
R4258		ERJ6GEYJ105	M.RESISTOR CH 1/10W 1M	1	
R4259		VRE0034E223	M.RESISTOR CH 1/10W 22K	1	
R4265		VRE0034E472	M.RESISTOR CH 1/10W 4.7K	1	
R4266		VRE0034E682	M.RESISTOR CH 1/10W 6.8K	1	
R4267		VRE0034E103	M.RESISTOR CH 1/10W 10K	1	
R4268,69		VRE0034E472	M.RESISTOR CH 1/10W 4.7K	2	
R4270		ERJ6GEYJ105	M.RESISTOR CH 1/10W 1M	1	
R4271,72		VRE0034E153	M.RESISTOR CH 1/10W 15K	2	
R4273		VRE0034E150	M.RESISTOR CH 1/10W 15	1	
R4274		ERJ6GEYJ100	M.RESISTOR CH 1/10W 10	1	
R4275,76		ERJ6GEYJ562	M.RESISTOR CH 1/10W 5.6K	2	
R4277,78		ERJ14YJ100	M.RESISTOR 1/4W 10	2	

Ref.No.		Part No.	Part Name & Description	Pcs	Remarks
R4279		ERJ14YJ220	M.RESISTOR 1/4W 22	1	
R4280		ERJ6GEYJ103	M.RESISTOR CH 1/10W 10K	1	
R4281,82		VRE0034E472	M.RESISTOR CH 1/10W 4.7K	2	
R4283		ERJ6GEYJ105	M.RESISTOR CH 1/10W 1M	1	
R4284,85		VRE0034E153	M.RESISTOR CH 1/10W 15K	2	
R4287		ERJ6GEYJ100	M.RESISTOR CH 1/10W 10	1	
R4288,89		ERJ6GEYJ562	M.RESISTOR CH 1/10W 5.6K	2	
R4290,91		ERJ14YJ100	M.RESISTOR 1/4W 10	2	
R4292		ERJ14YJ220	M.RESISTOR 1/4W 22	1	
R4293		ERJ6GEYJ103	M.RESISTOR CH 1/10W 10K	1	
R4294		ERJ6GEYJ473	M.RESISTOR CH 1/10W 47K	1	
R4295		ERJ6GEYJ681	M.RESISTOR CH 1/10W 680	1	
R4296-98		ERJ6GEY0R00	M.RESISTOR CH 1/10W 0	3	
R4301,02		ERJ6GEYJ474	M.RESISTOR CH 1/10W 470K	2	
R4303-05		ERJ6GEYJ471	M.RESISTOR CH 1/10W 470	3	
R4306,07		VRE0034E332	M.RESISTOR CH 1/10W 3.3K	2	
R4308		VRE0034E102	M.RESISTOR CH 1/10W 1K	1	
R4309,10		VRE0034E472	M.RESISTOR CH 1/10W 4.7K	2	
R4311,12		ERJ6GEYJ103	M.RESISTOR CH 1/10W 10K	2	
R4313		VRE0034E223	M.RESISTOR CH 1/10W 22K	1	
R4314		VRE0034E222	M.RESISTOR CH 1/10W 2.2K	1	
R4315		VRE0034E102	M.RESISTOR CH 1/10W 1K	1	
R4316		VRE0034E123	M.RESISTOR CH 1/10W 12K	1	
R4317		VRE0034E472	M.RESISTOR CH 1/10W 4.7K	1	
R4318		ERJ6GEYJ105	M.RESISTOR CH 1/10W 1M	1	
R4319		VRE0034E223	M.RESISTOR CH 1/10W 22K	1	
R4325		VRE0034E472	M.RESISTOR CH 1/10W 4.7K	1	
R4326		VRE0034E682	M.RESISTOR CH 1/10W 6.8K	1	
R4327		VRE0034E103	M.RESISTOR CH 1/10W 10K	1	
R4328,29		VRE0034E472	M.RESISTOR CH 1/10W 4.7K	2	
R4330		ERJ6GEYJ105	M.RESISTOR CH 1/10W 1M	1	
R4331,32		VRE0034E153	M.RESISTOR CH 1/10W 15K	2	
R4333		VRE0034E150	M.RESISTOR CH 1/10W 15	1	
R4334		ERJ6GEYJ100	M.RESISTOR CH 1/10W 10	1	
R4335,36		ERJ6GEYJ562	M.RESISTOR CH 1/10W 5.6K	2	
R4337,38		ERJ14YJ100	M.RESISTOR 1/4W 10	2	
R4339		ERJ14YJ220	M.RESISTOR 1/4W 22	1	
R4340		ERJ6GEYJ103	M.RESISTOR CH 1/10W 10K	1	
R4341,42		VRE0034E472	M.RESISTOR CH 1/10W 4.7K	2	
R4343		ERJ6GEYJ105	M.RESISTOR CH 1/10W 1M	1	
R4344,45		VRE0034E153	M.RESISTOR CH 1/10W 15K	2	
R4347		ERJ6GEYJ100	M.RESISTOR CH 1/10W 10	1	
R4348,49		ERJ6GEYJ562	M.RESISTOR CH 1/10W 5.6K	2	
R4350,51		ERJ14YJ100	M.RESISTOR 1/4W 10	2	
R4352		ERJ14YJ220	M.RESISTOR 1/4W 22	1	
R4353		ERJ6GEYJ103	M.RESISTOR CH 1/10W 10K	1	
R4354		ERJ6GEYJ473	M.RESISTOR CH 1/10W 47K	1	
R4355		ERJ6GEYJ681	M.RESISTOR CH 1/10W 680	1	
R4356		ERJ6GEY0R00	M.RESISTOR CH 1/10W 0	1	
R4359,60		ERJ6GEY0R00	M.RESISTOR CH 1/10W 0	2	
R4361		VRE0034E473	M.RESISTOR CH 1/10W 47K	1	
R4362,63		VRE0034E472	M.RESISTOR CH 1/10W 4.7K	2	
R4364		VRE0034E223	M.RESISTOR CH 1/10W 22K	1	
R4365,66		ERJ6GEYJ103	M.RESISTOR CH 1/10W 10K	2	
R4367		ERJ6GEY0R00	M.RESISTOR CH 1/10W 0	1	
R4368		VRE0034E473	M.RESISTOR CH 1/10W 47K	1	
R4369,70		VRE0034E472	M.RESISTOR CH 1/10W 4.7K	2	
R4371		VRE0034E223	M.RESISTOR CH 1/10W 22K	1	
R4372,73		ERJ6GEYJ103	M.RESISTOR CH 1/10W 10K	2	
R4375-80		ERJ6GEY0R00	M.RESISTOR CH 1/10W 0	6	
R4381		VRE0034E223	M.RESISTOR CH 1/10W 22K	1	
R4382		VRE0034E222	M.RESISTOR CH 1/10W 2.2K	1	
R4383		VRE0034E392	M.RESISTOR CH 1/10W 3.9K	1	
R4384		VRE0034E473	M.RESISTOR CH 1/10W 47K	1	
R4385		VRE0034E102	M.RESISTOR CH 1/10W 1K	1	
R4386		VRE0034E101	M.RESISTOR CH 1/10W 100	1	
R4387		VRE0034E60B	M.RESISTOR CH 1/10W 6	1	
R4388		VRE0034E20B	M.RESISTOR CH 1/10W 2	1	
R4389		VRE0034E272	M.RESISTOR CH 1/10W 2.7K	1	
R4391		VRE0034E223	M.RESISTOR CH 1/10W 22K	1	
R4392		VRE0034E222	M.RESISTOR CH 1/10W 2.2K	1	
R4393		VRE0034E392	M.RESISTOR CH 1/10W 3.9K	1	
R4394		VRE0034E473	M.RESISTOR CH 1/10W 47K	1	
R4395		VRE0034E102	M.RESISTOR CH 1/10W 1K	1	
R4396		VRE0034E101	M.RESISTOR CH 1/10W 100	1	

Ref.No.	Part No.	Part Name & Description	Pcs	Remarks
R4397	VRE0034E60B	M.RESISTOR CH 1/10W 6	1	
R4398	VRE0034E20B	M.RESISTOR CH 1/10W 2	1	
R4399	VRE0034E272	M.RESISTOR CH 1/10W 2.7K	1	
R4401	VRE0034E472	M.RESISTOR CH 1/10W 4.7K	1	
R4402	VRE0034E103	M.RESISTOR CH 1/10W 10K	1	
R4403	VRE0034E390	M.RESISTOR CH 1/10W 39	1	
R4404	VRE0034E472	M.RESISTOR CH 1/10W 4.7K	1	
R4405	VRE0034E103	M.RESISTOR CH 1/10W 10K	1	
R4406	VRE0034E390	M.RESISTOR CH 1/10W 39	1	
R4407	ERJ6GEYJ101	M.RESISTOR CH 1/10W 100	1	
R4408,09	ERJ6GEYJ103	M.RESISTOR CH 1/10W 10K	2	
R4412	ERJ6GEY0R00	M.RESISTOR CH 1/10W 0	1	
R4413	ERJ6GEYJ101	M.RESISTOR CH 1/10W 100	1	
R4414	ERJ6GEY0R00	M.RESISTOR CH 1/10W 0	1	
R4415	ERJ6GEYJ103	M.RESISTOR CH 1/10W 10K	1	
R4417-29	ERJ6GEYJ103	M.RESISTOR CH 1/10W 10K	13	
RA4001	EXBLD8103G	COMBI.R-R 10K	1	
RY4001-15	VSY2039	RELAY	15	
SW4001	VSS0187	SWITCH	1	
SW4003	VSS0187	SWITCH	1	
SW4005	VSS0187	SWITCH	1	
SW4007	VSS0187	SWITCH	1	
SW4009,10	VSS0126	SWITCH	2	
TP4001-06	VJR0646	TEST POINT	6	
TPG4001-06	VJR0646	TEST POINT	6	
VR4001	VRV0155B104	V.RESISTOR W	1	
VR4002	VRV0113B103	T.RESISTOR 10K	1	
VR4003	VRV0155B104	V.RESISTOR W	1	
VR4004	VRV0113B103	T.RESISTOR 10K	1	
VR4005	VRV0155B104	V.RESISTOR W	1	
VR4006	VRV0113B103	T.RESISTOR 10K	1	
VR4007	VRV0155B104	V.RESISTOR W	1	
VR4008	VRV0113B103	T.RESISTOR 10K	1	
VR4009	VRV0155B104	V.RESISTOR W	1	
VR4010	VRV0113B103	T.RESISTOR 10K	1	
VR4011	VRV0155B104	V.RESISTOR W	1	
VR4012	VRV0113B103	T.RESISTOR 10K	1	
VR4013-18	VRV0113B501	T.RESISTOR 500	6	
		MISCELLANEOUS		
	VML2143	LEVER. ARM.	1	
	VML2144	LEVER. ARM.	1	
	VXA4420	P.C.BOARD SHIELD PLATE	1	
	XTV3+6FFR	SCREW	5	

S9 AUDIO A/D VEP84156A

Ref.No.		Part No.	Part Name & Description	Pcs	Remarks
S9	■	VEP84156A	P.C.BOARD W/COMPONENT		
			AUDIO A/D		
			CAPACITORS		
C4001,02		ECA1HAXL330	.CAPACITOR V	2	
C4003		ECA1EAXL100	.CAPACITOR V	1	
C4004		ECUM1H330JCN	C.CAPACITOR CH 50V 33P	1	
C4005		ECHU1C472G	P.CAPACITOR 16V 4700P	1	
C4006		ECUM1H100DCN	C.CAPACITOR CH 50V 10P	1	
C4007		ECA1CAXN330	.CAPACITOR V	1	
C4008		ECUM1H561JCN	C.CAPACITOR CH 50V 560P	1	
C4009		ECUM1H151JCN	C.CAPACITOR CH 50V 150P	1	
C4010		ECUM1H122JN	C.CAPACITOR CH 50V 1200P	1	
C4011		ECA1CAXN330	.CAPACITOR V	1	
C4012,13		ECUM1H103KBN	C.CAPACITOR CH 50V 0.01U	2	
C4014		ECA1CAXN330	.CAPACITOR V	1	
C4015		ECUM1H561JCN	C.CAPACITOR CH 50V 560P	1	
C4016		ECUM1H151JCN	C.CAPACITOR CH 50V 150P	1	
C4017		ECUM1H122JN	C.CAPACITOR CH 50V 1200P	1	
C4018		ECA1CAXN330	.CAPACITOR V	1	
C4019,20		ECUM1H103KBN	C.CAPACITOR CH 50V 0.01U	2	
C4021-27		ECUM1H103ZFN	C.CAPACITOR CH 50V 0.01U	7	
C4028		ECA1EAXL100	.CAPACITOR V	1	
C4029		ECUM1H103ZFN	C.CAPACITOR CH 50V 0.01U	1	
C4030		ECA1EAXL100	.CAPACITOR V	1	
C4031,32		ECUM1H103ZFN	C.CAPACITOR CH 50V 0.01U	2	
C4033		ECA1EAXL100	.CAPACITOR V	1	
C4034,35		ECUM1H103ZFN	C.CAPACITOR CH 50V 0.01U	2	
C4036		ECA1EAXL100	.CAPACITOR V	1	
C4037,38		ECUM1H103ZFN	C.CAPACITOR CH 50V 0.01U	2	
C4039		ECA1EAXL100	.CAPACITOR V	1	
C4040,41		ECUM1H103ZFN	C.CAPACITOR CH 50V 0.01U	2	
C4042		ECA1EAXL100	.CAPACITOR V	1	
C4043,44		ECUM1E104ZFN	C.CAPACITOR CH 25V 0.1U	2	
C4045		ECA1EAXL100	.CAPACITOR V	1	
C4046-49		ECUM1E104ZFN	C.CAPACITOR CH 25V 0.1U	4	
C4050		ECA1EAXL101	.CAPACITOR V	1	
C4051,52		ECUM1E104ZFN	C.CAPACITOR CH 25V 0.1U	2	
C4054		ECUM1E104ZFN	C.CAPACITOR CH 25V 0.1U	1	
C4055,56		ECA1EAXL101	.CAPACITOR V	2	
C4057,58		ECUM1E104ZFN	C.CAPACITOR CH 25V 0.1U	2	
C4060		ECUM1E104ZFN	C.CAPACITOR CH 25V 0.1U	1	
C4061,62		ECA1EAXL101	.CAPACITOR V	2	
C4063,64		ECUM1E104ZFN	C.CAPACITOR CH 25V 0.1U	2	
C4066		ECUM1E104ZFN	C.CAPACITOR CH 25V 0.1U	1	
C4067		ECA1AAXL101	.CAPACITOR V	1	
C4068		ECA1EAXL101	.CAPACITOR V	1	
C4069,70		ECUM1E104ZFN	C.CAPACITOR CH 25V 0.1U	2	
C4072		ECUM1E104ZFN	C.CAPACITOR CH 25V 0.1U	1	
C4073		ECA1AAXL101	.CAPACITOR V	1	
C4074		ECA1AAXL221	.CAPACITOR V	1	
C4075		ECUM1E104ZFN	C.CAPACITOR CH 25V 0.1U	1	
C4077,78		ECUM1E104ZFN	C.CAPACITOR CH 25V 0.1U	2	
C4079		ECA1AAXL101	.CAPACITOR V	1	
C4081,82		ECA1HAXL330	.CAPACITOR V	2	
C4083		ECA1EAXL100	.CAPACITOR V	1	
C4084		ECUM1H330JCN	C.CAPACITOR CH 50V 33P	1	
C4085		ECHU1C472G	P.CAPACITOR 16V 4700P	1	
C4086		ECUM1H100DCN	C.CAPACITOR CH 50V 10P	1	
C4087		ECA1CAXN330	.CAPACITOR V	1	
C4088		ECUM1H561JCN	C.CAPACITOR CH 50V 560P	1	
C4089		ECUM1H151JCN	C.CAPACITOR CH 50V 150P	1	
C4090		ECUM1H122JN	C.CAPACITOR CH 50V 1200P	1	
C4091		ECA1CAXN330	.CAPACITOR V	1	
C4092,93		ECUM1H103KBN	C.CAPACITOR CH 50V 0.01U	2	
C4094		ECA1CAXN330	.CAPACITOR V	1	
C4095		ECUM1H561JCN	C.CAPACITOR CH 50V 560P	1	
C4096		ECUM1H151JCN	C.CAPACITOR CH 50V 150P	1	
C4097		ECUM1H122JN	C.CAPACITOR CH 50V 1200P	1	

Ref.No.		Part No.	Part Name & Description	Pcs	Remarks
C4098		ECA1CAXN330	.CAPACITOR V	1	
C4099,00		ECUM1H103KBN	C.CAPACITOR CH 50V 0.01U	2	
C4101-07		ECUM1H103ZFN	C.CAPACITOR CH 50V 0.01U	7	
C4108		ECA1EAXL100	.CAPACITOR V	1	
C4109		ECUM1H103ZFN	C.CAPACITOR CH 50V 0.01U	1	
C4110		ECA1EAXL100	.CAPACITOR V	1	
C4111,12		ECUM1H103ZFN	C.CAPACITOR CH 50V 0.01U	2	
C4113		ECA1EAXL100	.CAPACITOR V	1	
C4114,15		ECUM1H103ZFN	C.CAPACITOR CH 50V 0.01U	2	
C4116		ECA1EAXL100	.CAPACITOR V	1	
C4117,18		ECUM1H103ZFN	C.CAPACITOR CH 50V 0.01U	2	
C4119		ECA1EAXL100	.CAPACITOR V	1	
C4120,21		ECUM1H103ZFN	C.CAPACITOR CH 50V 0.01U	2	
C4122		ECA1EAXL100	.CAPACITOR V	1	
C4123,24		ECUM1E104ZFN	C.CAPACITOR CH 25V 0.1U	2	
C4125		ECA1EAXL100	.CAPACITOR V	1	
C4126-29		ECUM1E104ZFN	C.CAPACITOR CH 25V 0.1U	4	
C4161,62		ECA1HAXL330	.CAPACITOR V	2	
C4163		ECA1EAXL100	.CAPACITOR V	1	
C4164		ECUM1H330JCN	C.CAPACITOR CH 50V 33P	1	
C4165		ECHU1C472G	P.CAPACITOR 16V 4700P	1	
C4166		ECUM1H100DCN	C.CAPACITOR CH 50V 10P	1	
C4167		ECA1CAXN330	.CAPACITOR V	1	
C4168		ECUM1H561JCN	C.CAPACITOR CH 50V 560P	1	
C4169		ECUM1H151JCN	C.CAPACITOR CH 50V 150P	1	
C4170		ECUM1H122JN	C.CAPACITOR CH 50V 1200P	1	
C4171		ECA1CAXN330	.CAPACITOR V	1	
C4172,73		ECUM1H103KBN	C.CAPACITOR CH 50V 0.01U	2	
C4174		ECA1CAXN330	.CAPACITOR V	1	
C4175		ECUM1H561JCN	C.CAPACITOR CH 50V 560P	1	
C4176		ECUM1H151JCN	C.CAPACITOR CH 50V 150P	1	
C4177		ECUM1H122JN	C.CAPACITOR CH 50V 1200P	1	
C4178		ECA1CAXN330	.CAPACITOR V	1	
C4179,80		ECUM1H103KBN	C.CAPACITOR CH 50V 0.01U	2	
C4181-87		ECUM1H103ZFN	C.CAPACITOR CH 50V 0.01U	7	
C4188		ECA1EAXL100	.CAPACITOR V	1	
C4189		ECUM1H103ZFN	C.CAPACITOR CH 50V 0.01U	1	
C4190		ECA1EAXL100	.CAPACITOR V	1	
C4191,92		ECUM1H103ZFN	C.CAPACITOR CH 50V 0.01U	2	
C4193		ECA1EAXL100	.CAPACITOR V	1	
C4194,95		ECUM1H103ZFN	C.CAPACITOR CH 50V 0.01U	2	
C4196		ECA1EAXL100	.CAPACITOR V	1	
C4197,98		ECUM1H103ZFN	C.CAPACITOR CH 50V 0.01U	2	
C4199		ECA1EAXL100	.CAPACITOR V	1	
C4200,01		ECUM1H103ZFN	C.CAPACITOR CH 50V 0.01U	2	
C4202		ECA1EAXL100	.CAPACITOR V	1	
C4203,04		ECUM1E104ZFN	C.CAPACITOR CH 25V 0.1U	2	
C4205		ECA1EAXL100	.CAPACITOR V	1	
C4206-09		ECUM1E104ZFN	C.CAPACITOR CH 25V 0.1U	4	
C4210		ECA1EAXL101	.CAPACITOR V	1	
C4211,12		ECUM1E104ZFN	C.CAPACITOR CH 25V 0.1U	2	
C4214		ECUM1E104ZFN	C.CAPACITOR CH 25V 0.1U	1	
C4215,16		ECA1EAXL101	.CAPACITOR V	2	
C4217,18		ECUM1E104ZFN	C.CAPACITOR CH 25V 0.1U	2	
C4220		ECUM1E104ZFN	C.CAPACITOR CH 25V 0.1U	1	
C4221,22		ECA1EAXL101	.CAPACITOR V	2	
C4223,24		ECUM1E104ZFN	C.CAPACITOR CH 25V 0.1U	2	
C4226		ECUM1E104ZFN	C.CAPACITOR CH 25V 0.1U	1	
C4227		ECA1AAXL101	.CAPACITOR V	1	
C4228		ECA1EAXL101	.CAPACITOR V	1	
C4229,30		ECUM1E104ZFN	C.CAPACITOR CH 25V 0.1U	2	
C4232		ECUM1E104ZFN	C.CAPACITOR CH 25V 0.1U	1	
C4233		ECA1AAXL101	.CAPACITOR V	1	
C4234		ECA1AAXL221	.CAPACITOR V	1	
C4235		ECUM1E104ZFN	C.CAPACITOR CH 25V 0.1U	1	
C4237,38		ECUM1E104ZFN	C.CAPACITOR CH 25V 0.1U	2	
C4239		ECA1AAXL101	.CAPACITOR V	1	
C4241,42		ECA1HAXL330	.CAPACITOR V	2	
C4243		ECA1EAXL100	.CAPACITOR V	1	
C4244		ECUM1H330JCN	C.CAPACITOR CH 50V 33P	1	
C4245		ECHU1C472G	P.CAPACITOR 16V 4700P	1	
C4246		ECUM1H100DCN	C.CAPACITOR CH 50V 10P	1	
C4247		ECA1CAXN330	.CAPACITOR V	1	
C4248		ECUM1H561JCN	C.CAPACITOR CH 50V 560P	1	
C4249		ECUM1H151JCN	C.CAPACITOR CH 50V 150P	1	

Ref.No.	Part No.	Part Name & Description	Pcs	Remarks
C4250	ECUM1H122JN	C.CAPACITOR CH 50V 1200P	1	
C4251	ECA1CAXN330	.CAPACITOR V	1	
C4252,53	ECUM1H103KBN	C.CAPACITOR CH 50V 0.01U	2	
C4254	ECA1CAXN330	.CAPACITOR V	1	
C4255	ECUM1H561JCN	C.CAPACITOR CH 50V 560P	1	
C4256	ECUM1H151JCN	C.CAPACITOR CH 50V 150P	1	
C4257	ECUM1H122JN	C.CAPACITOR CH 50V 1200P	1	
C4258	ECA1CAXN330	.CAPACITOR V	1	
C4259,60	ECUM1H103KBN	C.CAPACITOR CH 50V 0.01U	2	
C4261-67	ECUM1H103ZFN	C.CAPACITOR CH 50V 0.01U	7	
C4268	ECA1EAXL100	.CAPACITOR V	1	
C4269	ECUM1H103ZFN	C.CAPACITOR CH 50V 0.01U	1	
C4270	ECA1EAXL100	.CAPACITOR V	1	
C4271,72	ECUM1H103ZFN	C.CAPACITOR CH 50V 0.01U	2	
C4273	ECA1EAXL100	.CAPACITOR V	1	
C4274,75	ECUM1H103ZFN	C.CAPACITOR CH 50V 0.01U	2	
C4276	ECA1EAXL100	.CAPACITOR V	1	
C4277,78	ECUM1H103ZFN	C.CAPACITOR CH 50V 0.01U	2	
C4279	ECA1EAXL100	.CAPACITOR V	1	
C4280,81	ECUM1H103ZFN	C.CAPACITOR CH 50V 0.01U	2	
C4282	ECA1EAXL100	.CAPACITOR V	1	
C4283,84	ECUM1E104ZFN	C.CAPACITOR CH 25V 0.1U	2	
C4285	ECA1EAXL100	.CAPACITOR V	1	
C4286-89	ECUM1E104ZFN	C.CAPACITOR CH 25V 0.1U	4	
C4321-27	ECUM1H103ZFN	C.CAPACITOR CH 50V 0.01U	7	
C4328	ECA1AAXL101	.CAPACITOR V	1	
C4329	ECUM1H103ZFN	C.CAPACITOR CH 50V 0.01U	1	
C4331	ECA1AAXL221	.CAPACITOR V	1	
C4332,33	ECA1EAXL101	.CAPACITOR V	2	
C4334,35	ECA1AAXL101	.CAPACITOR V	2	
C4336-38	ECUM1H103ZFN	C.CAPACITOR CH 50V 0.01U	3	
D4001,02	MA157	DIODE	2	
D4003	MA151K	DIODE	1	
D4004,05	MA157	DIODE	2	
D4006	MA151K	DIODE	1	
D4007,08	MA157	DIODE	2	
D4009	MA151K	DIODE	1	
D4010,11	MA157	DIODE	2	
D4012	MA151K	DIODE	1	
FL4001-04	VLF0576	FILTER	4	
FL4009	VLF0576	FILTER	1	
FL4011-14	VLF0576	FILTER	4	
FL4019	VLF0576	FILTER	1	
FL4021	VLF0576	FILTER	1	
IC4001,02	NJM4580ED	IC	2	
IC4003	AD7538JR	IC	1	
IC4004-08	NJM4580ED	IC	5	
IC4009	AK5326	IC	1	
IC4010	MN53040VPQ	IC	1	
IC4011	AN78N12	IC	1	
IC4012	AN79N12	IC	1	
IC4013	NJM78L05UA	IC	1	
IC4014	NJM79L05UA	IC	1	
IC4015,16	NJM4580ED	IC	2	
IC4017	AD7538JR	IC	1	
IC4018-22	NJM4580ED	IC	5	
IC4023	AK5326	IC	1	
IC4024	MN53040VPQ	IC	1	
IC4029	AN78N05	IC	1	
IC4031,32	NJM4580ED	IC	2	
IC4033	AD7538JR	IC	1	
IC4034-38	NJM4580ED	IC	5	
IC4039	AK5326	IC	1	
IC4040	MN53040VPQ	IC	1	
IC4041	AN78N12	IC	1	
IC4042	AN79N12	IC	1	

Ref.No.	Part No.	Part Name & Description	Pcs	Remarks
IC4043	NJM78L05UA	IC	1	
IC4044	NJM79L05UA	IC	1	
IC4045,46	NJM4580ED	IC	2	
IC4047	AD7538JR	IC	1	
IC4048-52	NJM4580ED	IC	5	
IC4053	AK5326	IC	1	
IC4054	MN53040VPQ	IC	1	
IC4059	AN78N05	IC	1	
IC4061,62	SN74HCT541N	IC	2	
IC4063	SN74LS541NS	IC	1	
IC4064-66	SN74HCT541N	IC	3	
IC4067	MC74HC86F	IC	1	
IC4068	MC74HC32AF	IC	1	
IC4069	MC74HC74AF	IC	1	
L4001-04	VLQ0576	COIL	4	
P017,18	VJP3454B096	CONNECTOR (MALE)	2	
Q4001	UN2213	TRANSISTOR-RESISTOR	1	
Q4002	2SD601-R	TRANSISTOR CHIP	1	(R)
Q4003	UN2213	TRANSISTOR-RESISTOR	1	
Q4004	2SD601-R	TRANSISTOR CHIP	1	(R)
Q4005	UN2213	TRANSISTOR-RESISTOR	1	
Q4006	2SD601-R	TRANSISTOR CHIP	1	(R)
Q4007	UN2213	TRANSISTOR-RESISTOR	1	
Q4008	2SD601-R	TRANSISTOR CHIP	1	(R)
		RESISTORS		
R4002	ERJ12YJ621	M.RESISTOR 1/2W 620	1	
R4004	VRE0034E103	M.RESISTOR CH 1/10W 10K	1	
R4005,06	VRE0034E473	M.RESISTOR CH 1/10W 47K	2	
R4007,08	VRE0034E123	M.RESISTOR CH 1/10W 12K	2	
R4009,10	VRE0034E333	M.RESISTOR CH 1/10W 33K	2	
R4011,12	VRE0034E332	M.RESISTOR CH 1/10W 3.3K	2	
R4013,14	VRE0034E32B	M.RESISTOR CH 1/10W 0.32	2	
R4015,16	ERJ6GEY0R00	M.RESISTOR CH 1/10W 0	2	
R4017-19	VRE0034E472	M.RESISTOR CH 1/10W 4.7K	3	
R4020	VRE0034E470	M.RESISTOR CH 1/10W 47	1	
R4021,22	VRE0034E472	M.RESISTOR CH 1/10W 4.7K	2	
R4023	VRE0034E392	M.RESISTOR CH 1/10W 3.9K	1	
R4024	VRE0034E473	M.RESISTOR CH 1/10W 47K	1	
R4025	VRE0034E102	M.RESISTOR CH 1/10W 1K	1	
R4026	VRE0034E101	M.RESISTOR CH 1/10W 100	1	
R4027,28	ERJ6GEYJ103	M.RESISTOR CH 1/10W 10K	2	
R4029	VRE0034E123	M.RESISTOR CH 1/10W 12K	1	
R4030	VRE0034E222	M.RESISTOR CH 1/10W 2.2K	1	
R4031	VRE0034E102	M.RESISTOR CH 1/10W 1K	1	
R4032	ERJ6GEYJ105	M.RESISTOR CH 1/10W 1M	1	
R4033	VRE0034E223	M.RESISTOR CH 1/10W 22K	1	
R4034	VRE0034E103	M.RESISTOR CH 1/10W 10K	1	
R4035	VRE0034E471	M.RESISTOR CH 1/10W 470	1	
R4036	VRE0034E123	M.RESISTOR CH 1/10W 12K	1	
R4037	VRE0034E152	M.RESISTOR CH 1/10W 1.5K	1	
R4038	VRE0034E222	M.RESISTOR CH 1/10W 2.2K	1	
R4039-41	VRE0034E472	M.RESISTOR CH 1/10W 4.7K	3	
R4042	VRE0034E332	M.RESISTOR CH 1/10W 3.3K	1	
R4043	VRE0034E512	M.RESISTOR CH 1/10W 5.1K	1	
R4044	ERJ6GEYJ105	M.RESISTOR CH 1/10W 1M	1	
R4045	ERJ6GEYJ101	M.RESISTOR CH 1/10W 100	1	
R4046,47	VRE0034E510	M.RESISTOR CH 1/10W 51	2	
R4048	VRE0034E103	M.RESISTOR CH 1/10W 10K	1	
R4049	ERJ6GEYJ105	M.RESISTOR CH 1/10W 1M	1	
R4050	ERJ6GEYJ101	M.RESISTOR CH 1/10W 100	1	
R4051	VRE0034E152	M.RESISTOR CH 1/10W 1.5K	1	
R4052	VRE0034E222	M.RESISTOR CH 1/10W 2.2K	1	
R4053-55	VRE0034E472	M.RESISTOR CH 1/10W 4.7K	3	

Ref.No.		Part No.	Part Name & Description	Pcs	Remarks
R4056		VRE0034E103	M.RESISTOR CH 1/10W 10K	1	
R4057		ERJ6GEYJ105	M.RESISTOR CH 1/10W 1M	1	
R4058		ERJ6GEYJ101	M.RESISTOR CH 1/10W 100	1	
R4059,60		VRE0034E510	M.RESISTOR CH 1/10W 51	2	
R4061		ERJ6GEY0R00	M.RESISTOR CH 1/10W 0	1	
R4062		ERJ6GEYJ100	M.RESISTOR CH 1/10W 10	1	
R4072		ERJ12YJ621	M.RESISTOR 1/2W 620	1	
R4074		VRE0034E103	M.RESISTOR CH 1/10W 10K	1	
R4075,76		VRE0034E473	M.RESISTOR CH 1/10W 47K	2	
R4077,78		VRE0034E123	M.RESISTOR CH 1/10W 12K	2	
R4079,80		VRE0034E333	M.RESISTOR CH 1/10W 33K	2	
R4081,82		VRE0034E332	M.RESISTOR CH 1/10W 3.3K	2	
R4083,84		VRE0034E32B	M.RESISTOR CH 1/10W 0.32	2	
R4085,86		ERJ6GEY0R00	M.RESISTOR CH 1/10W 0	2	
R4087-89		VRE0034E472	M.RESISTOR CH 1/10W 4.7K	3	
R4090		VRE0034E470	M.RESISTOR CH 1/10W 47	1	
R4091,92		VRE0034E472	M.RESISTOR CH 1/10W 4.7K	2	
R4093		VRE0034E392	M.RESISTOR CH 1/10W 3.9K	1	
R4094		VRE0034E473	M.RESISTOR CH 1/10W 47K	1	
R4095		VRE0034E102	M.RESISTOR CH 1/10W 1K	1	
R4096		VRE0034E101	M.RESISTOR CH 1/10W 100	1	
R4097,98		ERJ6GEYJ103	M.RESISTOR CH 1/10W 10K	2	
R4099		VRE0034E123	M.RESISTOR CH 1/10W 12K	1	
R4100		VRE0034E222	M.RESISTOR CH 1/10W 2.2K	1	
R4101		VRE0034E102	M.RESISTOR CH 1/10W 1K	1	
R4102		VRE0034E223	M.RESISTOR CH 1/10W 22K	1	
R4103		ERJ6GEYJ105	M.RESISTOR CH 1/10W 1M	1	
R4104		VRE0034E103	M.RESISTOR CH 1/10W 10K	1	
R4105		VRE0034E471	M.RESISTOR CH 1/10W 470	1	
R4106		VRE0034E123	M.RESISTOR CH 1/10W 12K	1	
R4107		VRE0034E152	M.RESISTOR CH 1/10W 1.5K	1	
R4108		VRE0034E222	M.RESISTOR CH 1/10W 2.2K	1	
R4109-11		VRE0034E472	M.RESISTOR CH 1/10W 4.7K	3	
R4112		VRE0034E332	M.RESISTOR CH 1/10W 3.3K	1	
R4113		VRE0034E512	M.RESISTOR CH 1/10W 5.1K	1	
R4114		ERJ6GEYJ105	M.RESISTOR CH 1/10W 1M	1	
R4115		ERJ6GEYJ101	M.RESISTOR CH 1/10W 100	1	
R4116,17		VRE0034E510	M.RESISTOR CH 1/10W 51	2	
R4118		VRE0034E103	M.RESISTOR CH 1/10W 10K	1	
R4119		ERJ6GEYJ105	M.RESISTOR CH 1/10W 1M	1	
R4120		ERJ6GEYJ101	M.RESISTOR CH 1/10W 100	1	
R4121		VRE0034E152	M.RESISTOR CH 1/10W 1.5K	1	
R4122		VRE0034E222	M.RESISTOR CH 1/10W 2.2K	1	
R4123-25		VRE0034E472	M.RESISTOR CH 1/10W 4.7K	3	
R4126		VRE0034E103	M.RESISTOR CH 1/10W 10K	1	
R4127		ERJ6GEYJ105	M.RESISTOR CH 1/10W 1M	1	
R4128		ERJ6GEYJ101	M.RESISTOR CH 1/10W 100	1	
R4129,30		VRE0034E510	M.RESISTOR CH 1/10W 51	2	
R4131		ERJ6GEY0R00	M.RESISTOR CH 1/10W 0	1	
R4132		ERJ6GEYJ100	M.RESISTOR CH 1/10W 10	1	
R4142		ERJ12YJ621	M.RESISTOR 1/2W 620	1	
R4144		VRE0034E103	M.RESISTOR CH 1/10W 10K	1	
R4145,46		VRE0034E473	M.RESISTOR CH 1/10W 47K	2	
R4147,48		VRE0034E123	M.RESISTOR CH 1/10W 12K	2	
R4149,50		VRE0034E333	M.RESISTOR CH 1/10W 33K	2	
R4151,52		VRE0034E332	M.RESISTOR CH 1/10W 3.3K	2	
R4153,54		VRE0034E32B	M.RESISTOR CH 1/10W 0.32	2	
R4155,56		ERJ6GEY0R00	M.RESISTOR CH 1/10W 0	2	
R4157-59		VRE0034E472	M.RESISTOR CH 1/10W 4.7K	3	
R4160		VRE0034E470	M.RESISTOR CH 1/10W 47	1	
R4161,62		VRE0034E472	M.RESISTOR CH 1/10W 4.7K	2	
R4163		VRE0034E392	M.RESISTOR CH 1/10W 3.9K	1	
R4164		VRE0034E473	M.RESISTOR CH 1/10W 47K	1	
R4165		VRE0034E102	M.RESISTOR CH 1/10W 1K	1	
R4166		VRE0034E101	M.RESISTOR CH 1/10W 100	1	
R4167,68		ERJ6GEYJ103	M.RESISTOR CH 1/10W 10K	2	
R4169		VRE0034E123	M.RESISTOR CH 1/10W 12K	1	
R4170		VRE0034E222	M.RESISTOR CH 1/10W 2.2K	1	
R4171		VRE0034E102	M.RESISTOR CH 1/10W 1K	1	
R4172		ERJ6GEYJ105	M.RESISTOR CH 1/10W 1M	1	
R4173		VRE0034E223	M.RESISTOR CH 1/10W 22K	1	
R4174		VRE0034E103	M.RESISTOR CH 1/10W 10K	1	
R4175		VRE0034E471	M.RESISTOR CH 1/10W 470	1	
R4176		VRE0034E123	M.RESISTOR CH 1/10W 12K	1	
R4177		VRE0034E152	M.RESISTOR CH 1/10W 1.5K	1	

Ref.No.		Part No.	Part Name & Description	Pcs	Remarks
R4178		VRE0034E222	M.RESISTOR CH 1/10W 2.2K	1	
R4179-81		VRE0034E472	M.RESISTOR CH 1/10W 4.7K	3	
R4182		VRE0034E332	M.RESISTOR CH 1/10W 3.3K	1	
R4183		VRE0034E512	M.RESISTOR CH 1/10W 5.1K	1	
R4184		ERJ6GEYJ105	M.RESISTOR CH 1/10W 1M	1	
R4185		ERJ6GEYJ101	M.RESISTOR CH 1/10W 100	1	
R4186,87		VRE0034E510	M.RESISTOR CH 1/10W 51	2	
R4188		VRE0034E103	M.RESISTOR CH 1/10W 10K	1	
R4189		ERJ6GEYJ105	M.RESISTOR CH 1/10W 1M	1	
R4190		ERJ6GEYJ101	M.RESISTOR CH 1/10W 100	1	
R4191		VRE0034E152	M.RESISTOR CH 1/10W 1.5K	1	
R4192		VRE0034E222	M.RESISTOR CH 1/10W 2.2K	1	
R4193-95		VRE0034E472	M.RESISTOR CH 1/10W 4.7K	3	
R4196		VRE0034E103	M.RESISTOR CH 1/10W 10K	1	
R4197		ERJ6GEYJ105	M.RESISTOR CH 1/10W 1M	1	
R4198		ERJ6GEYJ101	M.RESISTOR CH 1/10W 100	1	
R4199,00		VRE0034E510	M.RESISTOR CH 1/10W 51	2	
R4201		ERJ6GEY0R00	M.RESISTOR CH 1/10W 0	1	
R4202		ERJ6GEYJ100	M.RESISTOR CH 1/10W 10	1	
R4212		ERJ12YJ621	M.RESISTOR 1/2W 620	1	
R4214		VRE0034E103	M.RESISTOR CH 1/10W 10K	1	
R4215,16		VRE0034E473	M.RESISTOR CH 1/10W 47K	2	
R4217,18		VRE0034E123	M.RESISTOR CH 1/10W 12K	2	
R4219,20		VRE0034E333	M.RESISTOR CH 1/10W 33K	2	
R4221,22		VRE0034E332	M.RESISTOR CH 1/10W 3.3K	2	
R4223,24		VRE0034E32B	M.RESISTOR CH 1/10W 0.32	2	
R4225,26		ERJ6GEY0R00	M.RESISTOR CH 1/10W 0	2	
R4227-29		VRE0034E472	M.RESISTOR CH 1/10W 4.7K	3	
R4230		VRE0034E470	M.RESISTOR CH 1/10W 47	1	
R4231,32		VRE0034E472	M.RESISTOR CH 1/10W 4.7K	2	
R4233		VRE0034E392	M.RESISTOR CH 1/10W 3.9K	1	
R4234		VRE0034E473	M.RESISTOR CH 1/10W 47K	1	
R4235		VRE0034E102	M.RESISTOR CH 1/10W 1K	1	
R4236		VRE0034E101	M.RESISTOR CH 1/10W 100	1	
R4237,38		ERJ6GEYJ103	M.RESISTOR CH 1/10W 10K	2	
R4239		VRE0034E123	M.RESISTOR CH 1/10W 12K	1	
R4240		VRE0034E222	M.RESISTOR CH 1/10W 2.2K	1	
R4241		VRE0034E102	M.RESISTOR CH 1/10W 1K	1	
R4242		VRE0034E223	M.RESISTOR CH 1/10W 22K	1	
R4243		ERJ6GEYJ105	M.RESISTOR CH 1/10W 1M	1	
R4244		VRE0034E103	M.RESISTOR CH 1/10W 10K	1	
R4245		VRE0034E471	M.RESISTOR CH 1/10W 470	1	
R4246		VRE0034E123	M.RESISTOR CH 1/10W 12K	1	
R4247		VRE0034E152	M.RESISTOR CH 1/10W 1.5K	1	
R4248		VRE0034E222	M.RESISTOR CH 1/10W 2.2K	1	
R4249-51		VRE0034E472	M.RESISTOR CH 1/10W 4.7K	3	
R4252		VRE0034E332	M.RESISTOR CH 1/10W 3.3K	1	
R4253		VRE0034E512	M.RESISTOR CH 1/10W 5.1K	1	
R4254		ERJ6GEYJ105	M.RESISTOR CH 1/10W 1M	1	
R4255		ERJ6GEYJ101	M.RESISTOR CH 1/10W 100	1	
R4256,57		VRE0034E510	M.RESISTOR CH 1/10W 51	2	
R4258		VRE0034E103	M.RESISTOR CH 1/10W 10K	1	
R4259		ERJ6GEYJ105	M.RESISTOR CH 1/10W 1M	1	
R4260		ERJ6GEYJ101	M.RESISTOR CH 1/10W 100	1	
R4261		VRE0034E152	M.RESISTOR CH 1/10W 1.5K	1	
R4262		VRE0034E222	M.RESISTOR CH 1/10W 2.2K	1	
R4263-65		VRE0034E472	M.RESISTOR CH 1/10W 4.7K	3	
R4266		VRE0034E103	M.RESISTOR CH 1/10W 10K	1	
R4267		ERJ6GEYJ105*	M.RESISTOR CH 1/10W 1M	1	
R4268		ERJ6GEYJ101	M.RESISTOR CH 1/10W 100	1	
R4269,70		VRE0034E510	M.RESISTOR CH 1/10W 51	2	
R4271		ERJ6GEY0R00	M.RESISTOR CH 1/10W 0	1	
R4272		ERJ6GEYJ100	M.RESISTOR CH 1/10W 10	1	
RY4001-04		VSY2039	RELAY	4	
SW4002,03		VJP1990	CONNECTOR	2	
SW4004		VSS0162	SWITCH	1	
SW4008,09		VJP1990	CONNECTOR	2	
SW4010		VSS0162	SWITCH	1	
SW4014,15		VJP1990	CONNECTOR	2	

Ref.No.		Part No.	Part Name & Description	Pcs	Remarks
SW4016		VSS0162	SWITCH	1	
SW4020,21		VJP1990	CONNECTOR	2	
SW4022		VSS0162	SWITCH	1	
SWS4001-04		VJS1990	CONNECTOR	4	
TP4001-12		VJR0646	TEST POINT	12	
TPG4001-04		VJR0646	TEST POINT	4	
VR4001		VRV0109B201	V.RESISTOR 200	1	
VR4002		VRV0109B103	V.RESISTOR 10K	1	
VR4003		VRV0109B201	V.RESISTOR 200	1	
VR4004		VRV0109B103	V.RESISTOR 10K	1	
VR4005		VRV0109B201	V.RESISTOR 200	1	
VR4006		VRV0109B103	V.RESISTOR 10K	1	
VR4007		VRV0109B201	V.RESISTOR 200	1	
VR4008		VRV0109B103	V.RESISTOR 10K	1	
			MISCELLANEOUS		
		VML2143	LEVER. ARM.	1	
		VML2144	LEVER. ARM.	1	
		VXA4420	P.C.BOARD SHIELD PLATE	1	
		XTV3+6FFR	SCREW	5	

S10 VIDEO A/D,D/A VEP88093B

Ref.No.		Part No.	Part Name & Description	Pcs	Remarks
S10	■	VEP88093B	P.C.BOARD W/COMPONENT		
			VIDEO A/D,D/A		
			CAPACITORS		
C8001		ECA1AXNV101C	.CAPACITOR V	1	
C8002,03		ECEV1CV470	E.CAPACITOR 16V 47U	2	
C8004,05		ECUX1C104ZFV	C.CAPACITOR CH 16V 0.1U	2	
C8006,07		ECUX1H103ZFV	C.CAPACITOR CH 50V 0.01U	2	
C8008,09		ECEV1CV470	E.CAPACITOR 16V 47U	2	
C8010		ECEV1HV4R7	.CAPACITOR V	1	
C8011-14		ECEV1CV470	E.CAPACITOR 16V 47U	4	
C8015-23		ECUX1C104ZFV	C.CAPACITOR CH 16V 0.1U	9	
C8024		ECUM1E104KBN	C.CAPACITOR 25V 0.1U	1	
C8025-39		ECUX1C104ZFV	C.CAPACITOR CH 16V 0.1U	15	
C8040		ECUM1E104KBN	C.CAPACITOR 25V 0.1U	1	
C8042		ECUX1C104ZFV	C.CAPACITOR CH 16V 0.1U	1	
C8044,45		ECUX1C104ZFV	C.CAPACITOR CH 16V 0.1U	2	
C8047		ECUX1C104ZFV	C.CAPACITOR CH 16V 0.1U	1	
C8048,49		ECUX1H103ZFV	C.CAPACITOR CH 50V 0.01U	2	
C8050-52		ECEV1CV470	E.CAPACITOR 16V 47U	3	
C8055-57		ECEV1CV470	E.CAPACITOR 16V 47U	3	
C8058-63		ECUX1C104ZFV	C.CAPACITOR CH 16V 0.1U	6	
C8065		ECUX1C104ZFV	C.CAPACITOR CH 16V 0.1U	1	
C8067		ECUX1C104ZFV	C.CAPACITOR CH 16V 0.1U	1	
C8072-79		ECUX1C104ZFV	C.CAPACITOR CH 16V 0.1U	8	
C8081-83		ECUX1C104ZFV	C.CAPACITOR CH 16V 0.1U	3	
C8085		ECUX1H122KBV	C.CAPACITOR CH 50V 1200P	1	
C8086		ECUX1H330JCV	C.CAPACITOR 50V 33P	1	
C8088		ECUX1H470JCV	C.CAPACITOR 50V 47P	1	
C8089		ECUX1H331JCV		1	
C8090		ECUX1C104ZFV	C.CAPACITOR CH 16V 0.1U	1	
C8092		ECUM1E104KBN	C.CAPACITOR 25V 0.1U	1	
C8094,95		ECUX1C104ZFV	C.CAPACITOR CH 16V 0.1U	2	
C8096		ECEV1HN010	E.CAPACITOR 50V 1U	1	
C8097,98		ECEV1CV470	E.CAPACITOR 16V 47U	2	
C8099		ECUX1C104ZFV	C.CAPACITOR CH 16V 0.1U	1	
C8100,01		ECUX1H470JCV	C.CAPACITOR 50V 47P	2	
C8102,03		ECUX1C104ZFV	C.CAPACITOR CH 16V 0.1U	2	
C8104,05		ECUM1E104KBN	C.CAPACITOR 25V 0.1U	2	
C8106		ECUX1H820JCV	C.CAPACITOR CH 50V 82P	1	
C8107		ECUX1H680JCV	C.CAPACITOR 50V 68P	1	
C8108		ECUX1C104ZFV	C.CAPACITOR CH 16V 0.1U	1	
C8109		ECUX1H180JCV	C.CAPACITOR 50V 18P	1	
C8110		ECUX1H472KBV	C.CAPACITOR 50V 4700P	1	
C8111		ECUM1E104KBN	C.CAPACITOR 25V 0.1U	1	
C8112,13		ECUX1C104ZFV	C.CAPACITOR CH 16V 0.1U	2	
C8114		ECUX1H103ZFV	C.CAPACITOR CH 50V 0.01U	1	
C8115,16		ECEV1CV470	E.CAPACITOR 16V 47U	2	
C8117		ECUX1C104ZFV	C.CAPACITOR CH 16V 0.1U	1	
C8118		ECUX1H221JCV	C.CAPACITOR CH 50V 220P	1	
C8119-23		ECUX1C104ZFV	C.CAPACITOR CH 16V 0.1U	5	
C8124		ECUX1H102KBV	C.CAPACITOR 50V 1000P	1	
C8125		ECUX1C104ZFV	C.CAPACITOR CH 16V 0.1U	1	
C8126		ECUM1H223KBN	C.CAPACITOR CH 50V 0.022U	1	
C8127-30		ECUX1C104ZFV	C.CAPACITOR CH 16V 0.1U	4	
C8131,32		ECUX1H103ZFV	C.CAPACITOR CH 50V 0.01U	2	
C8133		ECEV1HN010	E.CAPACITOR 50V 1U	1	
C8134-37		ECEV1CV470	E.CAPACITOR 16V 47U	4	
C8138		ECEV1HV010	E.CAPACITOR 50V 1U	1	
C8139-53		ECUX1C104ZFV	C.CAPACITOR CH 16V 0.1U	15	
C8154		ECUM1E104KBN	C.CAPACITOR 25V 0.1U	1	
C8155-58		ECUX1C104ZFV	C.CAPACITOR CH 16V 0.1U	4	
C8159		ECUX1H561JCV	C.CAPACITOR 50V 560P	1	
C8160		ECUX1H101JCV	C.CAPACITOR CH 50V 100P	1	
C8161-63		ECEV1CV470	E.CAPACITOR 16V 47U	3	
C8164,65		ECUX1C104ZFV	C.CAPACITOR CH 16V 0.1U	2	
C8166		ECUX1H822KBV	C.CAPACITOR CH 50V 8200P	1	
C8167		ECUM1E104KBN	C.CAPACITOR 25V 0.1U	1	
C8168,69		ECUX1C104ZFV	C.CAPACITOR CH 16V 0.1U	2	

Ref.No.		Part No.	Part Name & Description	Pcs	Remarks
C8170		ECUX1H103ZFV	C.CAPACITOR CH 50V 0.01U	1	
C8171		ECUX1C104ZFV	C.CAPACITOR CH 16V 0.1U	1	
C8172		ECEV1CV470	E.CAPACITOR 16V 47U	1	
C8173		ECEV1CV100	E.CAPACITOR 16V 10U	1	
C8174-76		ECEV1CV470	E.CAPACITOR 16V 47U	3	
C8177		ECUX1H470JCV	C.CAPACITOR 50V 47P	1	
C8178		ECUX1C104ZFV	C.CAPACITOR CH 16V 0.1U	1	
C8179		ECUX1H470JCV	C.CAPACITOR 50V 47P	1	
C8180		ECUX1H220JCV	C.CAPACITOR CH 50V 22P	1	
C8181		ECUX1H102KBV	C.CAPACITOR 50V 1000P	1	
C8182		ECUM1E104KBN	C.CAPACITOR 25V 0.1U	1	
C8183		ECUX1C104ZFV	C.CAPACITOR CH 16V 0.1U	1	
C8184		ECUM1E104KBN	C.CAPACITOR 25V 0.1U	1	
C8185		ECUX1H331JCV		1	
C8186-88		ECUX1C104ZFV	C.CAPACITOR CH 16V 0.1U	3	
C8189		ECUX1H221JCV	C.CAPACITOR CH 50V 220P	1	
C8190		ECUX1H220JCV	C.CAPACITOR CH 50V 22P	1	
C8191-94		ECUX1C104ZFV	C.CAPACITOR CH 16V 0.1U	4	
C8204-08		ECEV1CV470	E.CAPACITOR 16V 47U	5	
C8209		ECUX1C104ZFV	C.CAPACITOR CH 16V 0.1U	1	
C8211		ECUX1C104ZFV	C.CAPACITOR CH 16V 0.1U	1	
C8212		ECUM1E104KBN	C.CAPACITOR 25V 0.1U	1	
C8213-15		ECUX1C104ZFV	C.CAPACITOR CH 16V 0.1U	3	
C8216		ECUM1E104KBN	C.CAPACITOR 25V 0.1U	1	
C8217		ECUX1H182KBV	C.CAPACITOR CH 50V 1800P	1	
C8218,19		ECUX1C104ZFV	C.CAPACITOR CH 16V 0.1U	2	
C8220,21		ECUX1H330JCV	C.CAPACITOR 50V 33P	2	
C8222-50		ECUX1C104ZFV	C.CAPACITOR CH 16V 0.1U	29	
C8251,52		ECEV1CV470	E.CAPACITOR 16V 47U	2	
C8253,54		ECUX1C104ZFV	C.CAPACITOR CH 16V 0.1U	2	
C8255,56		ECUX1H103ZFV	C.CAPACITOR CH 50V 0.01U	2	
C8257-62		ECUX1C104ZFV	C.CAPACITOR CH 16V 0.1U	6	
C8275,76		ECUX1C104ZFV	C.CAPACITOR CH 16V 0.1U	2	
C8277		ECEV1CV470	E.CAPACITOR 16V 47U	1	
C8278-80		ECUX1C104ZFV	C.CAPACITOR CH 16V 0.1U	3	
C8281		ECA1AXNV101C	.CAPACITOR V	1	
C8282		ECEV1HN4R7	.CAPACITOR V	1	
C8283		ECA1HXKN2R2F	E.CAPACITOR 50V 2.2U	1	
C8285,86		ECEV1CV470	E.CAPACITOR 16V 47U	2	
C8287-89		ECUX1C104ZFV	C.CAPACITOR CH 16V 0.1U	3	
C8290		ECUX1H470JCV	C.CAPACITOR 50V 47P	1	
C8291		ECUX1C104ZFV	C.CAPACITOR CH 16V 0.1U	1	
C8292		ECUX1H331JCV		1	
C8293		ECUX1C104ZFV	C.CAPACITOR CH 16V 0.1U	1	
C8294		ECUX1H560JCV	C.CAPACITOR 50V 56P	1	
C8295		ECUX1H020CCV	C.CAPACITOR 50V 2P	1	
C8299		ECUX1C104ZFV	C.CAPACITOR CH 16V 0.1U	1	
C8300		ECUX1H180JCV	C.CAPACITOR 50V 18P	1	
C8301		VCK0037474KR	C.CAPACITOR 50V 0.27U	1	
C8302,03		ECUX1C104ZFV	C.CAPACITOR CH 16V 0.1U	2	
C8304		ECUX1H470JCV	C.CAPACITOR 50V 47P	1	
C8305,06		ECUX1C104ZFV	C.CAPACITOR CH 16V 0.1U	2	
C8307		ECUX1H470JCV	C.CAPACITOR 50V 47P	1	
C8308,09		ECUX1H103ZFV	C.CAPACITOR CH 50V 0.01U	2	
C8310,11		ECEV1CV470	E.CAPACITOR 16V 47U	2	
C8312,13		ECUX1C104ZFV	C.CAPACITOR CH 16V 0.1U	2	
C8316,17		ECUX1C104ZFV	C.CAPACITOR CH 16V 0.1U	2	
C8318,19		ECEV1CV470	E.CAPACITOR 16V 47U	2	
C8320		ECUX1H180JCV	C.CAPACITOR 50V 18P	1	
C8321-26		ECUX1C104ZFV	C.CAPACITOR CH 16V 0.1U	6	
C8327,28		ECEV1CV470	E.CAPACITOR 16V 47U	2	
C8329		ECUX1H180JCV	C.CAPACITOR 50V 18P	1	
C8330,31		ECUX1C104ZFV	C.CAPACITOR CH 16V 0.1U	2	
C8332,33		ECEV1CV470	E.CAPACITOR 16V 47U	2	
C8334		ECUX1H180JCV	C.CAPACITOR 50V 18P	1	
C8335		ECUX1C104ZFV	C.CAPACITOR CH 16V 0.1U	1	
C8336		ECUX1H270JCV	C.CAPACITOR 50V 27P	1	
C8337		ECUX1C104ZFV	C.CAPACITOR CH 16V 0.1U	1	
C8338		ECUX1H151JCV	C.CAPACITOR CH 50V 150P	1	
C8339-42		ECUX1C104ZFV	C.CAPACITOR CH 16V 0.1U	4	
C8343-46		ECEV1CV470	E.CAPACITOR 16V 47U	4	
C8347		ECUX1C104ZFV	C.CAPACITOR CH 16V 0.1U	1	
C8348		ECUX1H180JCV	C.CAPACITOR 50V 18P	1	
C8349-55		ECUX1C104ZFV	C.CAPACITOR CH 16V 0.1U	7	
C8356,57		ECUX1H102KBV	C.CAPACITOR 50V 1000P	2	

Ref.No.		Part No.	Part Name & Description	Pcs	Remarks
C8358-61		ECUX1C1042FV	C.CAPACITOR CH 16V 0.1U	4	
C8362,63		ECEV1CV470	E.CAPACITOR 16V 47U	2	
C8364,65		ECEV1EV330	E.CAPACITOR 25V 33U	2	
C8366,67		ECUX1C1042FV	C.CAPACITOR CH 16V 0.1U	2	
C8368,69		ECUX1H1032FV	C.CAPACITOR CH 50V 0.01U	2	
C8370		ECEV1CV470	E.CAPACITOR 16V 47U	1	
C8371		ECUX1C1042FV	C.CAPACITOR CH 16V 0.1U	1	
C8372		ECEV1CV470	E.CAPACITOR 16V 47U	1	
C8373-75		ECUX1C1042FV	C.CAPACITOR CH 16V 0.1U	3	
C8376,77		ECUX1H1032FV	C.CAPACITOR CH 50V 0.01U	2	
C8378-87		ECUX1C1042FV	C.CAPACITOR CH 16V 0.1U	10	
C8400-26		ECUX1C1042FV	C.CAPACITOR CH 16V 0.1U	27	
D8001		MA3160-M	DIODE	1	
D8002		MA3051-M	DIODE	1	
D8003-08		MA335-R	DIODE	6	
D8009-12		MA141K	DIODE	4	
D8014		1SZ53	DIODE	1	
D8016		MA141WK	DIODE	1	
D8017		MA141K	DIODE	1	
D8018		MA335-R	DIODE	1	
D8019,20		MA141K	DIODE	2	
D8022		1SZ53	DIODE	1	
D8023		MA3160-M	DIODE	1	
D8024		MA157	DIODE	1	
D8025-28		MA3160-M	DIODE	4	
D8029		MA141K	DIODE	1	
FL8001		VLF0903	FILTER	1	
FL8002		ELB4Y013	FILTER	1	
FL8003-07		VLF0576	FILTER	5	
FL8008		VLF0931	COIL	1	
IC8001		AN79N12	IC	1	
IC8002		AN78N12	IC	1	
IC8003		NJM78L05UA	IC	1	
IC8004		NJM79L05UA	IC	1	
IC8005		DAC10-GS	IC	1	
IC8007		EL2082CS	IC	1	
IC8008		NJM79L12UA	IC	1	
IC8009		NJM78L12UA	IC	1	
IC8010		NJM084M	IC	1	
IC8014		NJM082BM	IC	1	
IC8015		NJM78L05UA	IC	1	
IC8018,19		CXD1175AM		2	
IC8020		EL2044CS	IC	1	
IC8021		NJM4560MD	IC	1	
IC8023		NJM2060M	IC	1	
IC8027		NJM084M	IC	1	
IC8031		AN91A12S	IC	1	
IC8032		AN78N09	IC	1	
IC8033		MM74HC221AMX	IC	1	
IC8035		MC74HC00AF	IC	1	
IC8036		UPC624C	IC	1	
IC8037		NJM79L09UA	IC	1	
IC8038		NJM78L09UA	IC	1	
IC8039		NJM319M	IC	1	
IC8041		NJM082BM	IC	1	
IC8043		NJM78L05UA	IC	1	
IC8044		CXD1175AM		1	
IC8045		NJM79L05UA	IC	1	
IC8046		MC74HC74AF	IC	1	
IC8047		MC74HC574AF	IC	1	
IC8048		MC74HC4053F	IC	1	
IC8050		NJM319M	IC	1	
IC8052		NJM084M	IC	1	
IC8056		NJM082BM	IC	1	
IC8058		UPD42102G-3	IC	1	
IC8059		L7A0756	IC	1	

Ref.No.		Part No.	Part Name & Description	Pcs	Remarks
IC8062		SN74LS221NS	IC	1	
IC8064		NJM78L05UA	IC	1	
IC8065		NJM79L05UA	IC	1	
IC8066		NJM78L09UA	IC	1	
IC8068		74F00SJ	IC	1	
IC8069		NJM082BM	IC	1	
IC8071		NJM78L05UA	IC	1	
IC8072		MM74HC221AMX	IC	1	
IC8074		74AC00SJ	IC	1	
IC8078		NJM084M	IC	1	
IC8083,84		NJM78L05UA	IC	2	
IC8085		MB40778PF		1	
IC8086,87		MC74HC163AF	IC	2	
IC8088		MC74HC00AF	IC	1	
IC8091		74F86SJ	IC	1	
IC8094		NJM360M	IC	1	
IC8095		NJM082BM	IC	1	
IC8097		MC74HC32AF	IC	1	
IC8106,07		SN74AS253NS	IC	2	
IC8108		SN74AS244NS	IC	1	
IC8109		MC10H125M	IC	1	
IC8111		MC10H125M	IC	1	
IC8113		MC10H125M	IC	1	
IC8116		SN74LS541NS	IC	1	
IC8117		SN74LS244NS	IC	1	
IC8119-21		MC10H124M	IC	3	
IC8125,26		UPD71055GB	IC	2	
IC8127		TC7SU04F	IC	1	
IC8128,29		SN74S1051NS	IC	2	
IC8134		MC74HC27F	IC	1	
IC8137		MC74HC138AF	IC	1	
IC8138		MC74HC00AF	IC	1	
IC8142-44		SN74ALS541NS	IC	3	
IC8145		SN74ALS245AS	IC	1	
IC8146		AN79N12	IC	1	
IC8147		AN78N12	IC	1	
IC8148,49		MC10H125M	IC	2	
IC8151		MC10H125M	IC	1	
IC8154		AN79N05	IC	1	
IC8155		TDC1112R3C1	IC	1	
IC8156		TMC2242R2C1	IC	1	
IC8157		74F821SCX	IC	1	
IC8158		AN79N12	IC	1	
IC8159		AN78N12	IC	1	
IC8160		MM74HC221AMX	IC	1	
IC8162		EL2044CS	IC	1	
IC8163		NJM084M	IC	1	
IC8167		EL2044CS	IC	1	
IC8168,69		AD9300KP	IC	2	
IC8171		NJM78L05UA	IC	1	
IC8172		NJM79L05UA	IC	1	
IC8173		MC74HC4052F	IC	1	
IC8174		NJM082BM	IC	1	
IC8175-77		MC10H124M	IC	3	
IC8178		EL2044CS	IC	1	
L8001-04		VLQ0163J220	COIL 22UH	4	
L8005		VLQ0133K821	COIL 820UH	1	
L8006,07		VLQ0163J220	COIL 22UH	2	
L8008		VLQ0133K221	COIL H	1	
L8009		VLQ0163J220	COIL 22UH	1	
L8010		VLP0017	COIL	1	
L8011,12		VLQ0163J220	COIL 22UH	2	
L8014		VLQ0319K470	COIL 47UH	1	
L8015		VLQ0163J220	COIL 22UH	1	
L8017		VLQ0133K821	COIL 820UH	1	
L8018-23		VLQ0163J220	COIL 22UH	6	
L8024		VLQ0319K680	COIL 68UH	1	
L8025-28		VLQ0163J220	COIL 22UH	4	
L8029,30		VLP0017	COIL	2	

Ref.No.		Part No.	Part Name & Description	Pcs	Remarks
P8001		VJP1230T	CONNECTOR (MALE) 3P	1	
P8019,20		VJP3454B096	CONNECTOR (MALE)	2	
Q8001,02		2SB709-R	TRANSISTOR CHIP	2	(R)
Q8003,04		2SD1991A	TRANSISTOR	2	
Q8005		2SB709-R	TRANSISTOR CHIP	1	(R)
Q8006		2SD601-R	TRANSISTOR CHIP	1	(R)
Q8007		2SB642	TRANSISTOR	1	
Q8008		2SB1322A-QR	TRANSISTOR	1	
Q8009		2SK198	TRANSISTOR CHIP	1	(Q,R,S)
Q8010-12		2SB709-R	TRANSISTOR CHIP	3	(R)
Q8013		2SB1218A	TRANSISTOR	1	
Q8014,15		2SC3930		2	
Q8016		2SD1819A	TRANSISTOR	1	
Q8017		2SK662	TRANSISTOR	1	
Q8022		2SB1322A-QR	TRANSISTOR	1	
Q8026		2SD601-R	TRANSISTOR CHIP	1	(R)
Q8027		2SK198	TRANSISTOR CHIP	1	(Q,R,S)
Q8028		2SD601-R	TRANSISTOR CHIP	1	(R)
Q8029		2SB709-R	TRANSISTOR CHIP	1	(R)
Q8030,31		2SC2188	TRANSISTOR	2	
Q8032		2SB709-R	TRANSISTOR CHIP	1	(R)
Q8033,34		2SC2188	TRANSISTOR	2	
Q8035		2SB709-R	TRANSISTOR CHIP	1	(R)
Q8036,37		2SC2188	TRANSISTOR	2	
Q8038		2SB709-R	TRANSISTOR CHIP	1	(R)
Q8039		2SD1991A	TRANSISTOR	1	
Q8040,41		2SC2188	TRANSISTOR	2	
			RESISTORS		
R8001,02		VRE0034E221	M.RESISTOR CH 1/10W 220	2	
R8003		VRE0034E392	M.RESISTOR CH 1/10W 3.9K	1	
R8004-07		VRE0034E362	M.RESISTOR CH 1/10W 3.6K	4	
R8008		VRE0034E103	M.RESISTOR CH 1/10W 10K	1	
R8009		VRE0034E101	M.RESISTOR CH 1/10W 100	1	
R8010		VRE0034E182	M.RESISTOR CH 1/10W 1.8K	1	
R8011		ERJ6GEYJ821	M.RESISTOR CH 1/10W 820	1	
R8012		ERJ6GEYJ681	M.RESISTOR CH 1/10W 680	1	
R8013		VRE0034E163	M.RESISTOR CH 1/10W 16K	1	
R8014		VRE0034E302	M.RESISTOR CH 1/10W 3K	1	
R8015		VRE0034E561	M.RESISTOR CH 1/10W 560	1	
R8016,17		ERJ6GEYJ822	M.RESISTOR CH 1/10W 8.2K	2	
R8018		VRE0034E911	M.RESISTOR CH 1/10W 910	1	
R8019		VRE0034E103	M.RESISTOR CH 1/10W 10K	1	
R8020		VRE0034E101	M.RESISTOR CH 1/10W 100	1	
R8021-23		VRE0034E103	M.RESISTOR CH 1/10W 10K	3	
R8024		ERJ6GEYJ183	M.RESISTOR CH 1/10W 18K	1	
R8025		ERJ6GEYJ821	M.RESISTOR CH 1/10W 820	1	
R8026		ERJ6GEYJ681	M.RESISTOR CH 1/10W 680	1	
R8027		VRE0034E362	M.RESISTOR CH 1/10W 3.6K	1	
R8028		ERJ6GEY0R00	M.RESISTOR CH 1/10W 0	1	
R8029		VRE0034E822	M.RESISTOR CH 1/10W 8.2K	1	
R8032		VRE0034E471	M.RESISTOR CH 1/10W 470	1	
R8033		VRE0034E332	M.RESISTOR CH 1/10W 3.3K	1	
R8034		ERJ6GEY0R00	M.RESISTOR CH 1/10W 0	1	
R8035		VRE0034E750	M.RESISTOR CH 1/10W 75	1	
R8037		VRE0034E750	M.RESISTOR CH 1/10W 75	1	
R8038,39		ERJ6GEYJ471	M.RESISTOR CH 1/10W 470	2	
R8040,41		VRE0034E361	M.RESISTOR CH 1/10W 360	2	
R8044		ERJ6GEY0R00	M.RESISTOR CH 1/10W 0	1	
R8045		VRE0034E332	M.RESISTOR CH 1/10W 3.3K	1	
R8046,47		VRE0034E911	M.RESISTOR CH 1/10W 910	2	
R8048		VRE0034E561	M.RESISTOR CH 1/10W 560	1	
R8051		VRE0034E820	M.RESISTOR CH 1/10W 82	1	
R8053		VRE0034E113	M.RESISTOR CH 1/10W 11K	1	
R8054		VRE0034E752	M.RESISTOR CH 1/10W 7.5K	1	
R8055		VRE0034E100	M.RESISTOR CH 1/10W 10	1	
R8056		VRE0034E561	M.RESISTOR CH 1/10W 560	1	
R8058		VRE0034E103	M.RESISTOR CH 1/10W 10K	1	
R8059		VRE0034E162	M.RESISTOR CH 1/10W 1.6K	1	
R8061		VRE0034E104	M.RESISTOR CH 1/10W 100K	1	

Ref.No.		Part No.	Part Name & Description	Pcs	Remarks
R8062		VRE0034E152	M.RESISTOR CH 1/10W 1.5K	1	
R8063,64		VRE0034E100	M.RESISTOR CH 1/10W 10	2	
R8065		VRE0034E393	M.RESISTOR CH 1/10W 39K	1	
R8067		VRE0034E561	M.RESISTOR CH 1/10W 560	1	
R8070		VRE0034E102	M.RESISTOR CH 1/10W 1K	1	
R8071		VRE0034E222	M.RESISTOR CH 1/10W 2.2K	1	
R8074		VRE0034E103	M.RESISTOR CH 1/10W 10K	1	
R8075		ERJ6GEYJ105	M.RESISTOR CH 1/10W 1M	1	
R8076		VRE0034E101	M.RESISTOR CH 1/10W 100	1	
R8077		ERJ6GEYJ105	M.RESISTOR CH 1/10W 1M	1	
R8078		VRE0034E153	M.RESISTOR CH 1/10W 15K	1	
R8079		ERJ6GEYJ123	M.RESISTOR CH 1/10W 12K	1	
R8080		VRE0034E101	M.RESISTOR CH 1/10W 100	1	
R8081		VRE0034E202	M.RESISTOR CH 1/10W 2K	1	
R8082		VRE0034E153	M.RESISTOR CH 1/10W 15K	1	
R8083		ERJ6GEYJ333	M.RESISTOR CH 1/10W 33K	1	
R8084		VRE0034E222	M.RESISTOR CH 1/10W 2.2K	1	
R8085		VRE0034E332	M.RESISTOR CH 1/10W 3.3K	1	
R8086		ERJ6GEYJ822	M.RESISTOR CH 1/10W 8.2K	1	
R8087		VRE0034E101	M.RESISTOR CH 1/10W 100	1	
R8088		VRE0034E222	M.RESISTOR CH 1/10W 2.2K	1	
R8089		ERJ6GEYJ822	M.RESISTOR CH 1/10W 8.2K	1	
R8090		VRE0034E103	M.RESISTOR CH 1/10W 10K	1	
R8091		ERJ6GEYJ684	M.RESISTOR CH 1/10W 680K	1	
R8092		VRE0034E222	M.RESISTOR CH 1/10W 2.2K	1	
R8093		VRE0034E221	M.RESISTOR CH 1/10W 220	1	
R8095		VRE0034E221	M.RESISTOR CH 1/10W 220	1	
R8096		ERJ6GEYJ681	M.RESISTOR CH 1/10W 680	1	
R8097,98		VRE0034E101	M.RESISTOR CH 1/10W 100	2	
R8099		ERJ6GEYJ123	M.RESISTOR CH 1/10W 12K	1	
R8100		VRE0034E472	M.RESISTOR CH 1/10W 4.7K	1	
R8101		VRE0034E101	M.RESISTOR CH 1/10W 100	1	
R8102		VRE0034E222	M.RESISTOR CH 1/10W 2.2K	1	
R8103		VRE0034E562	M.RESISTOR CH 1/10W 5.6K	1	
R8104		VRE0034E272	M.RESISTOR CH 1/10W 2.7K	1	
R8105		ERJ6GEYJ562	M.RESISTOR CH 1/10W 5.6K	1	
R8106		VRE0034E103	M.RESISTOR CH 1/10W 10K	1	
R8107		ERJ6GEYJ333	M.RESISTOR CH 1/10W 33K	1	
R8108		VRE0034E103	M.RESISTOR CH 1/10W 10K	1	
R8109		VRE0034E222	M.RESISTOR CH 1/10W 2.2K	1	
R8110		ERJ6GEYJ183	M.RESISTOR CH 1/10W 18K	1	
R8111,12		ERJ6GEYJ471	M.RESISTOR CH 1/10W 470	2	
R8113		ERJ6GEYJ620	.RESISTOR W	1	
R8114		VRE0034E153	M.RESISTOR CH 1/10W 15K	1	
R8115		VRE0034E103	M.RESISTOR CH 1/10W 10K	1	
R8116		VRE0034E101	M.RESISTOR CH 1/10W 100	1	
R8117		VRE0034E222	M.RESISTOR CH 1/10W 2.2K	1	
R8118		VRE0034E122	M.RESISTOR CH 1/10W 1.2K	1	
R8119		VRE0034E563	M.RESISTOR CH 1/10W 56K	1	
R8120		ERJ6GEYJ105	M.RESISTOR CH 1/10W 1M	1	
R8121		VRE0034E472	M.RESISTOR CH 1/10W 4.7K	1	
R8122		ERJ6GEYJ105	M.RESISTOR CH 1/10W 1M	1	
R8123,24		VRE0034E103	M.RESISTOR CH 1/10W 10K	2	
R8125		VRE0034E104	M.RESISTOR CH 1/10W 100K	1	
R8126,27		VRE0034E332	M.RESISTOR CH 1/10W 3.3K	2	
R8128		ERJ6GEYJ471	M.RESISTOR CH 1/10W 470	1	
R8129-36		ERJ6GEY0R00	M.RESISTOR CH 1/10W 0	8	
R8137,38		ERJ6GEYJ471	M.RESISTOR CH 1/10W 470	2	
R8139		VRE0034E103	M.RESISTOR CH 1/10W 10K	1	
R8140		VRE0034E332	M.RESISTOR CH 1/10W 3.3K	1	
R8141		ERJ6GEYJ471	M.RESISTOR CH 1/10W 470	1	
R8142		VRE0034E102	M.RESISTOR CH 1/10W 1K	1	
R8143		ERJ6GEY0R00	M.RESISTOR CH 1/10W 0	1	
R8144		VRE0034E332	M.RESISTOR CH 1/10W 3.3K	1	
R8145		VRE0034E103	M.RESISTOR CH 1/10W 10K	1	
R8146		ERJ6GEYJ105	M.RESISTOR CH 1/10W 1M	1	
R8147		ERJ6GEYJ682	M.RESISTOR CH 1/10W 6.8K	1	
R8148		VRE0034E113	M.RESISTOR CH 1/10W 11K	1	
R8149,50		VRE0034E103	M.RESISTOR CH 1/10W 10K	2	
R8151,52		VRE0034E222	M.RESISTOR CH 1/10W 2.2K	2	
R8153		VRE0034E101	M.RESISTOR CH 1/10W 100	1	
R8154,55		ERJ6GEYJ473	M.RESISTOR CH 1/10W 47K	2	
R8156		ERJ6GEY0R00	M.RESISTOR CH 1/10W 0	1	
R8157		VRE0034E103	M.RESISTOR CH 1/10W 10K	1	
R8158,59		VRE0034E104	M.RESISTOR CH 1/10W 100K	2	

Ref.No.	Part No.	Part Name & Description	Pcs	Remarks
R8160	ERJ6GEYJ105	M.RESISTOR CH 1/10W 1M	1	
R8161,62	VRE0034E104	M.RESISTOR CH 1/10W 100K	2	
R8163	VRE0034E332	M.RESISTOR CH 1/10W 3.3K	1	
R8164	VRE0034E683	M.RESISTOR CH 1/10W 68K	1	
R8165	VRE0034E102	M.RESISTOR CH 1/10W 1K	1	
R8166	VRE0034E332	M.RESISTOR CH 1/10W 3.3K	1	
R8167	VRE0034E102	M.RESISTOR CH 1/10W 1K	1	
R8168,69	VRE0034E472	M.RESISTOR CH 1/10W 4.7K	2	
R8170,71	VRE0034E103	M.RESISTOR CH 1/10W 10K	2	
R8172	VRE0034E472	M.RESISTOR CH 1/10W 4.7K	1	
R8173	VRE0034E561	M.RESISTOR CH 1/10W 560	1	
R8174	VRE0034E472	M.RESISTOR CH 1/10W 4.7K	1	
R8184	ERJ6GEYJ105	M.RESISTOR CH 1/10W 1M	1	
R8185	VRE0034E223	M.RESISTOR CH 1/10W 22K	1	
R8186	VRE0034E102	M.RESISTOR CH 1/10W 1K	1	
R8187	VRE0034E104	M.RESISTOR CH 1/10W 100K	1	
R8188	ERJ6GEYJ105	M.RESISTOR CH 1/10W 1M	1	
R8189	VRE0034E223	M.RESISTOR CH 1/10W 22K	1	
R8190	ERJ6GEYJ273	M.RESISTOR CH 1/10W 27K	1	
R8191	ERJ6GEYJ123	M.RESISTOR CH 1/10W 12K	1	
R8192	VRE0034E122	M.RESISTOR CH 1/10W 1.2K	1	
R8193	VRE0034E102	M.RESISTOR CH 1/10W 1K	1	
R8195,96	VRE0034E102	M.RESISTOR CH 1/10W 1K	2	
R8197	VRE0034E392	M.RESISTOR CH 1/10W 3.9K	1	
R8204-09	ERJ6GEY0R00	M.RESISTOR CH 1/10W 0	6	
R8210	ERJ6GEYJ471	M.RESISTOR CH 1/10W 470	1	
R8212-33	VRE0034E510	M.RESISTOR CH 1/10W 51	22	
R8245-64	ERJ6GEYJ471	M.RESISTOR CH 1/10W 470	20	
R8265-68	VRE0034E101	M.RESISTOR CH 1/10W 100	4	
R8269-71	ERJ6GEYJ471	M.RESISTOR CH 1/10W 470	3	
R8296	VRE0034E471	M.RESISTOR CH 1/10W 470	1	
R8297,98	ERJ6GEYJ471	M.RESISTOR CH 1/10W 470	2	
R8300	VRE0034E822	M.RESISTOR CH 1/10W 8.2K	1	
R8301	VRE0034E122	M.RESISTOR CH 1/10W 1.2K	1	
R8305	VRE0034E222	M.RESISTOR CH 1/10W 2.2K	1	
R8306	VRE0034E561	M.RESISTOR CH 1/10W 560	1	
R8307	VRE0034E124	.RESISTOR W	1	
R8308,09	VRE0034E100	M.RESISTOR CH 1/10W 10	2	
R8310	VRE0034E361	M.RESISTOR CH 1/10W 360	1	
R8311	VRE0034E271	M.RESISTOR CH 1/10W 270	1	
R8313	VRE0034E563	M.RESISTOR CH 1/10W 56K	1	
R8314	ERJ6GEYJ105	M.RESISTOR CH 1/10W 1M	1	
R8315,16	VRE0034E103	M.RESISTOR CH 1/10W 10K	2	
R8317	VRE0034E153	M.RESISTOR CH 1/10W 15K	1	
R8318	ERJ6GEYJ105	M.RESISTOR CH 1/10W 1M	1	
R8319	VRE0034E181	M.RESISTOR CH 1/10W 180	1	
R8320	VRE0034E222	M.RESISTOR CH 1/10W 2.2K	1	
R8321-23	VRE0034E101	M.RESISTOR CH 1/10W 100	3	
R8324	VRE0034E471	M.RESISTOR CH 1/10W 470	1	
R8326	VRE0034E471	M.RESISTOR CH 1/10W 470	1	
R8327	VRE0034E221	M.RESISTOR CH 1/10W 220	1	
R8328	VRE0034E102	M.RESISTOR CH 1/10W 1K	1	
R8329	VRE0034E221	M.RESISTOR CH 1/10W 220	1	
R8330	VRE0034E102	M.RESISTOR CH 1/10W 1K	1	
R8331	VRE0034E223	M.RESISTOR CH 1/10W 22K	1	
R8332	VRE0034E222	M.RESISTOR CH 1/10W 2.2K	1	
R8333	VRE0034E103	M.RESISTOR CH 1/10W 10K	1	
R8334,35	VRE0034E472	M.RESISTOR CH 1/10W 4.7K	2	
R8336	VRE0034E333	M.RESISTOR CH 1/10W 33K	1	
R8337	VRE0034E102	M.RESISTOR CH 1/10W 1K	1	
R8341	ERJ6GEYJ471	M.RESISTOR CH 1/10W 470	1	
R8342	VRE0034E561	M.RESISTOR CH 1/10W 560	1	
R8343	VRE0034E222	M.RESISTOR CH 1/10W 2.2K	1	
R8346	VRE0034E750	M.RESISTOR CH 1/10W 75	1	
R8347	VRE0034E272	M.RESISTOR CH 1/10W 2.7K	1	
R8348,49	VRE0034E221	M.RESISTOR CH 1/10W 220	2	
R8350	VRE0034E392	M.RESISTOR CH 1/10W 3.9K	1	
R8352	VRE0034E222	M.RESISTOR CH 1/10W 2.2K	1	
R8353	VRE0034E223	M.RESISTOR CH 1/10W 22K	1	
R8354	VRE0034E221	M.RESISTOR CH 1/10W 220	1	
R8355	VRE0034E100	M.RESISTOR CH 1/10W 10	1	
R8356	VRE0034E750	M.RESISTOR CH 1/10W 75	1	
R8357	VRE0034E272	M.RESISTOR CH 1/10W 2.7K	1	
R8358,59	VRE0034E221	M.RESISTOR CH 1/10W 220	2	
R8360	VRE0034E392	M.RESISTOR CH 1/10W 3.9K	1	

Ref.No.	Part No.	Part Name & Description	Pcs	Remarks
R8362	VRE0034E222	M.RESISTOR CH 1/10W 2.2K	1	
R8363	VRE0034E223	M.RESISTOR CH 1/10W 22K	1	
R8364	VRE0034E221	M.RESISTOR CH 1/10W 220	1	
R8365	VRE0034E750	M.RESISTOR CH 1/10W 75	1	
R8366	VRE0034E272	M.RESISTOR CH 1/10W 2.7K	1	
R8367,68	VRE0034E221	M.RESISTOR CH 1/10W 220	2	
R8369	VRE0034E392	M.RESISTOR CH 1/10W 3.9K	1	
R8371	VRE0034E222	M.RESISTOR CH 1/10W 2.2K	1	
R8372	VRE0034E223	M.RESISTOR CH 1/10W 22K	1	
R8373	VRE0034E221	M.RESISTOR CH 1/10W 220	1	
R8374	VRE0034E102	M.RESISTOR CH 1/10W 1K	1	
R8375	VRE0034E100	M.RESISTOR CH 1/10W 10	1	
R8376	VRE0034E750	M.RESISTOR CH 1/10W 75	1	
R8377	VRE0034E153	M.RESISTOR CH 1/10W 15K	1	
R8378	VRE0034E750	M.RESISTOR CH 1/10W 75	1	
R8379	VRE0034E272	M.RESISTOR CH 1/10W 2.7K	1	
R8380,81	VRE0034E221	M.RESISTOR CH 1/10W 220	2	
R8382	VRE0034E392	M.RESISTOR CH 1/10W 3.9K	1	
R8384	VRE0034E222	M.RESISTOR CH 1/10W 2.2K	1	
R8385	VRE0034E223	M.RESISTOR CH 1/10W 22K	1	
R8386	VRE0034E221	M.RESISTOR CH 1/10W 220	1	
R8387,88	VRE0034E392	M.RESISTOR CH 1/10W 3.9K	2	
R8389,90	VRE0034E102	M.RESISTOR CH 1/10W 1K	2	
R8391	ERJ6GEY0R00	M.RESISTOR CH 1/10W 0	1	
R8399,00	ERJ6GEY0R00	M.RESISTOR CH 1/10W 0	2	
R8403	VRE0034E332	M.RESISTOR CH 1/10W 3.3K	1	
R8404-19	ERJ6GEY0R00	M.RESISTOR CH 1/10W 0	16	
R8421	ERJ6GEY0R00	M.RESISTOR CH 1/10W 0	1	
R8423,24	ERJ6GEY0R00	M.RESISTOR CH 1/10W 0	2	
R8426-45	ERJ6GEYJ330	M.RESISTOR CH 1/10W 33	20	
R8446-48	VRE0034E332	M.RESISTOR CH 1/10W 3.3K	3	
R8450-60	VRE0034E470	M.RESISTOR CH 1/10W 47	11	
R8461,62	VRE0034E152	M.RESISTOR CH 1/10W 1.5K	2	
R8463,64	VRE0034E240	.RESISTOR W	2	
R8465-84	ERJ6GEY0R00	M.RESISTOR CH 1/10W 0	20	
R8485-97	VRE0034E471	M.RESISTOR CH 1/10W 470	13	
R8994	VRE0034E104	M.RESISTOR CH 1/10W 100K	1	
RY8001	VSY2039	RELAY	1	
TH8002	ERTD2FFL102S	THERMISTOR 1K	1	
TP8001,02	VJR0646	TEST POINT	2	
TP8006,07	VJR0646	TEST POINT	2	
TP8009	VJR0646	TEST POINT	1	
TP8016-18	VJR0646	TEST POINT	3	
TP8033	VJR0646	TEST POINT	1	
TPG8001-03	VJR0646	TEST POINT	3	
VL8001	VLQ0303	COIL	1	
VR8001	VRV0064B102	V.RESISTOR 1K	1	
VR8002	VRV0064B203	V.RESISTOR 20K	1	
VR8003	VRV0112B101	V.RESISTOR W	1	
VR8004	VRV0064B102	V.RESISTOR 1K	1	
VR8005	VRV0113B103	T.RESISTOR 10K	1	
VR8006	VRV0064B201	V.RESISTOR 200	1	
VR8007	VRV0113B202	T.RESISTOR 2K	1	
VR8008	VRV0113B502	T.RESISTOR 5K	1	
VR8011	VRV0113B103	T.RESISTOR 10K	1	
VR8012	VRV0064B102	V.RESISTOR 1K	1	
VR8013	VRV0113B102	V.RESISTOR 1K	1	
VR8014	VRV0113B502	T.RESISTOR 5K	1	
VR8015	VRV0113B202	T.RESISTOR 2K	1	
VR8016	VRV0113B102	V.RESISTOR 1K	1	

Ref.No.		Part No.	Part Name & Description	Pcs	Remarks
X8001		VSX0555	CRYSTAL OSCILLATOR	1	
X8002		VSX0546	CRYSTAL OSCILLATOR	1	
			MISCELLANEOUS		
		VML2143	LEVER. ARM.	1	
		VML2144	LEVER. ARM.	1	
		VXA4420	P.C.BOARD SHIELD PLATE	1	
		XTV3+6FFR	SCREW	5	

MAIN MOTHER VEP80786A
SUB MOTHER VEP80787A

REC AMP VEP85037A

Ref.No.		Part No.	Part Name & Description	Pcs	Remarks
	■	VEP80786A	P.C.BOARD W/COMPONENT		
			MAIN MOTHER		
	■	VEP80787A	P.C.BOARD W/COMPONENT		FOR VEP80786A
			SUB MOTHER		
P001,02		VJS2899A096	CONNECTOR (FEMALE)	2	
P005-10		VJS2899A096	CONNECTOR (FEMALE)	6	
P015-20		VJS2899A096	CONNECTOR (FEMALE)	6	
P021,22		VJS3454B096	CONNECTOR	2	
P023		VJP3375A080	CONNECTOR	1	
P024		VJP1246T	CONNECTOR (MALE) 6P	1	
P025,26		VJP1243T	CONNECTOR (MALE) 3P	2	
P027,28		VJP1246T	CONNECTOR (MALE) 6P	2	
P029		VJP1232T	CONNECTOR (MALE) 5P	1	
P030		VJP1248T	CONNECTOR (MALE) 8P	1	
P031		VJP1243T	CONNECTOR (MALE) 3P	1	
P033		VJP3094	CONNECTOR	1	
P034		VJP3093	CONNECTOR	1	
P036,37		VJS3423B025	CONNECTOR	2	
P041		VJP1246T	CONNECTOR (MALE) 6P	1	
P042		VJP1243T	CONNECTOR (MALE) 3P	1	
P043		VJP3418A040	CONNECTOR	1	
P044		VJP2741A014	CONNECTOR	1	
P045		VJP3440A006	CONNECTOR	1	
P046		VJP3440A022	CONNECTOR	1	
P047		VJP3440A016	CONNECTOR	1	
P049		VJP2824A006	CONNECTOR	1	
P050		VJP2824A009	CONNECTOR	1	
P051,52		VJP1230T	CONNECTOR (MALE) 3P	2	
			MISCELLANEOUS		
		VMX2233	SPACER	1	
		VMP3973	P.C.BOARD HOLDER ANGLE	1	
		VMP3974	P.C.BOARD HOLDER ANGLE	1	
		VMP3975	P.C.BOARD HOLDER ANGLE	1	
		SHR8006	POST	3	
		XTV26+6FFZ	SCREW	34	
		XNG26BFZ	NUT	4	
		XYN26+C8FZ	SCREW	4	
	■	VEP85037A	P.C.BOARD W/COMPONENT		
			REC AMP		
			CAPACITORS		
C1-C9		ECA1HXS100	E.CAPACITOR 50V 10U	9	
C10-12		ECA1HXS100	E.CAPACITOR 50V 10U	3	
C15		ECA1EXS330	E.CAPACITOR 25V 33U	1	
C16		ECA1HXLV101G	.CAPACITOR V	1	
C20-27		ECUX1C104ZFV	C.CAPACITOR CH 16V 0.1U	8	
C28-31		ECUX1H221JCV	C.CAPACITOR CH 50V 220P	4	
C32		ECUX1C104ZFV	C.CAPACITOR CH 16V 0.1U	1	
C36		ECUX1C104ZFV	C.CAPACITOR CH 16V 0.1U	1	
C38		ECUX1C104ZFV	C.CAPACITOR CH 16V 0.1U	1	
C40-58		ECUX1C104ZFV	C.CAPACITOR CH 16V 0.1U	19	
C60,61		ECUX1C104ZFV	C.CAPACITOR CH 16V 0.1U	2	
C64,65		ECUX1C104ZFV	C.CAPACITOR CH 16V 0.1U	2	
C68,69		ECUX1C104ZFV	C.CAPACITOR CH 16V 0.1U	2	

Ref.No.		Part No.	Part Name & Description	Pcs	Remarks
C72		ECUX1C104ZFV	C.CAPACITOR CH 16V 0.1U	1	
C74,75		ECUX1C104ZFV	C.CAPACITOR CH 16V 0.1U	2	
C90,91		ECA1HXS100	E.CAPACITOR 50V 10U	2	
C100-04		ECUX1C104ZFV	C.CAPACITOR CH 16V 0.1U	5	
C105-08		ECUX1H103KBV	C.CAPACITOR CH 50V 0.01U	4	
C109-14		ECUX1C104ZFV	C.CAPACITOR CH 16V 0.1U	6	
C115,16		ECUX1H101JCV	C.CAPACITOR CH 50V 100P	2	
C117-21		ECUX1C104ZFV	C.CAPACITOR CH 16V 0.1U	5	
C122,23		ECUX1H101JCV	C.CAPACITOR CH 50V 100P	2	
C124-27		ECUX1C104ZFV	C.CAPACITOR CH 16V 0.1U	4	
C128-31		ECUX1H102KBV	C.CAPACITOR 50V 1000P	4	
C132,33		ECUX1H100DCV	C.CAPACITOR 50V 10P	2	
C134,35		ECUX1H050CCV	C.CAPACITOR CH 50V 5P	2	
C200		ECUX1H050CCV	C.CAPACITOR CH 50V 5P	1	
C201-05		ECUX1C104ZFV	C.CAPACITOR CH 16V 0.1U	5	
C208		ECUX1H050CCV	C.CAPACITOR CH 50V 5P	1	
C209		ECUX1C104ZFV	C.CAPACITOR CH 16V 0.1U	1	
C220-23		ECUX1C104ZFV	C.CAPACITOR CH 16V 0.1U	4	
C232		ECUX1C104ZFV	C.CAPACITOR CH 16V 0.1U	1	
C250		ECUX1H562KBV	C.CAPACITOR 50V 5600P	1	
C251		ECUX1H102KBV	C.CAPACITOR 50V 1000P	1	
C252-58		ECUX1C104ZFV	C.CAPACITOR CH 16V 0.1U	7	
C300,01		ECUX1H050CCV	C.CAPACITOR CH 50V 5P	2	
C304,05		ECUX1C104ZFV	C.CAPACITOR CH 16V 0.1U	2	
C308,09		ECUX1C104ZFV	C.CAPACITOR CH 16V 0.1U	2	
C312,13		ECUX1H221JCV	C.CAPACITOR CH 50V 220P	2	
C316,17		ECUX1H101JCV	C.CAPACITOR CH 50V 100P	2	
C320,21		ECUX1H103KBV	C.CAPACITOR CH 50V 0.01U	2	
C324,25		ECUX1C104ZFV	C.CAPACITOR CH 16V 0.1U	2	
C328		ECUX1C104ZFV	C.CAPACITOR CH 16V 0.1U	1	
C329		ECUX1H102KBV	C.CAPACITOR 50V 1000P	1	
C330		ECUX1H101JCV	C.CAPACITOR CH 50V 100P	1	
C331-33		ECUX1C104ZFV	C.CAPACITOR CH 16V 0.1U	3	
C334		ECUX1H102KBV	C.CAPACITOR 50V 1000P	1	
C335,36		ECUX1C104ZFV	C.CAPACITOR CH 16V 0.1U	2	
C337		ECUX1H103KBV	C.CAPACITOR CH 50V 0.01U	1	
C338-40		ECUX1C104ZFV	C.CAPACITOR CH 16V 0.1U	3	
C343		ECUX1C104ZFV	C.CAPACITOR CH 16V 0.1U	1	
C350,51		ECUX1H101JCV	C.CAPACITOR CH 50V 100P	2	
C354,55		ECUX1H101JCV	C.CAPACITOR CH 50V 100P	2	
D1		MA153	DIODE	1	
D12,13		MA151K	DIODE	2	
D20		MA151K	DIODE	1	
HS1-S6		VSC3875		6	
IC1,C2		MC74HC86F	IC	2	
IC4,C5		MB88346BPFTF	IC	2	
IC6,C7		MC14053BF	IC	2	(R)
IC9		NJM082BM	IC	1	
IC11		NJM082BM	IC	1	
IC13		TC4S66F	IC	1	
IC17		AN79N12	IC	1	
IC18		AN78N12	IC	1	
IC20		MC14538BF	IC	1	
IC21,22		MC14015BF	IC	2	
IC23		MC74HC157AF	IC	1	
IC24,25		MC74HC86F	IC	2	
IC26		TC4S81F	IC	1	
IC40,41		MB1OHL116PFF	IC	2	
IC42		MC74HC86F	IC	1	
IC43,44		AN79N12	IC	2	
IC60,61		UPC1663G	IC	2	
IC64,65		UPC1676G	IC	2	
IC68		MC14052BF	IC	1	
IC69		NJM1496M	IC	1	
IC70		NJM082BM	IC	1	
IC71,72		TC4S30F	IC	2	

REC AMP

Ref.No.		Part No.	Part Name & Description	Pcs	Remarks
IC200		MB10HL116PFF	IC	1	
IC201		MC10H102L	IC	1	
IC202		MC10H176L	IC	1	
IC203,04		MB10HL116PFF	IC	2	
L1,L2		ELEA100JA	COIL H	2	
L3		VLQEL06F100J	COIL 10UH	1	
L4		ELEA100JA	COIL H	1	
L5		VLQ0163JR47	COIL H	1	
L6		VLQ0163JR56	COIL H	1	
L7		VLQ0163JR47	COIL H	1	
L8		VLQ0163JR56	COIL H	1	
L15		ELEA100JA	COIL H	1	
P501		VJP1232T	CONNECTOR (MALE) 5P	1	
P502		VJP1236T	CONNECTOR (MALE) 9P	1	
P503		VJP1233G	CONNECTOR (MALE) 6P	1	
P506		VJP1233T	CONNECTOR (MALE) 6P	1	
P507,08		VJP1235T	CONNECTOR (MALE) 8P	2	
P509		VJP1233T	CONNECTOR (MALE) 6P	1	
P510		VJP1231T	CONNECTOR (MALE) 4P	1	
Q1-Q4		2SA1022-B	TRANSISTOR	4	(B)
Q5		2SB709-R	TRANSISTOR CHIP	1	(R)
Q6		2SD601-R	TRANSISTOR CHIP	1	(R)
Q20,21		2SC3356		2	
Q22-24		2SC1253	TRANSISTOR	3	
Q25,26		2SA1022-B	TRANSISTOR	2	(B)
Q29,30		2SK508	TRANSISTOR	2	
Q31		2SD601-R	TRANSISTOR CHIP	1	(R)
Q40,41		2SC3356		2	
Q42-44		2SC1253	TRANSISTOR	3	
Q45,46		2SA1022-B	TRANSISTOR	2	(B)
Q49,50		2SK508	TRANSISTOR	2	
Q51		2SD601-R	TRANSISTOR CHIP	1	(R)
Q60		2SC3356		1	
Q100-03		2SD1979	TRANSISTOR	4	
			RESISTORS		
R1,R2		ERJ3GEYJ103	M.RESISTOR CH 1/16W 10K	2	
R3		ERJ3GEYJ392	M.RESISTOR CH 1/16W 3.9K	1	
R4,R5		ERJ3GEYJ103	M.RESISTOR CH 1/16W 10K	2	
R6		ERJ3GEYJ332	M.RESISTOR CH 1/16W 3.3K	1	
R7		ERJ3GEYJ562	M.RESISTOR CH 1/16W 5.6K	1	
R8,R9		ERJ3GEYJ103	M.RESISTOR CH 1/16W 10K	2	
R10		ERJ3GEYJ392	M.RESISTOR CH 1/16W 3.9K	1	
R11,12		ERJ3GEYJ103	M.RESISTOR CH 1/16W 10K	2	
R13		ERJ3GEYJ562	M.RESISTOR CH 1/16W 5.6K	1	
R14		ERJ3GEYJ332	M.RESISTOR CH 1/16W 3.3K	1	
R15-19		ERJ3GEYJ103	M.RESISTOR CH 1/16W 10K	5	
R20		ERJ3GEYJ392	M.RESISTOR CH 1/16W 3.9K	1	
R21		ERJ3GEYJ103	M.RESISTOR CH 1/16W 10K	1	
R22,23		ERJ3GEYJ101	M.RESISTOR CH 1/16W 100	2	
R25		ERJ3GEYJ103	M.RESISTOR CH 1/16W 10K	1	
R26		ERJ3GEYJ392	M.RESISTOR CH 1/16W 3.9K	1	
R27,28		ERJ3GEYJ103	M.RESISTOR CH 1/16W 10K	2	
R29		ERJ3GEYJ332	M.RESISTOR CH 1/16W 3.3K	1	
R30		ERJ3GEYJ562	M.RESISTOR CH 1/16W 5.6K	1	
R31-33		ERJ3GEYJ103	M.RESISTOR CH 1/16W 10K	3	
R34-36		ERJ3GEYJ101	M.RESISTOR CH 1/16W 100	3	
R39-42		ERJ3GEYJ101	M.RESISTOR CH 1/16W 100	4	
R50,51		ERJ3GEYJ472	M.RESISTOR CH 1/16W 4.7K	2	
R54		ERJ3GEYJ103	M.RESISTOR CH 1/16W 10K	1	
R55		ERJ3GEYJ273	M.RESISTOR CH 1/16W 27K	1	
R56		ERJ3GEYJ103	M.RESISTOR CH 1/16W 10K	1	
R57		ERJ3GEYJ273	M.RESISTOR CH 1/16W 27K	1	
R62,63		ERJ3GEYJ223	M.RESISTOR CH 1/16W 22K	2	

Ref.No.		Part No.	Part Name & Description	Pcs	Remarks
R66,67		ERJ3GEYJ103	M.RESISTOR CH 1/16W 10K	2	
R68		ERJ3GEYJ153	M.RESISTOR CH 1/16W 15K	1	
R69		ERJ3GEYJ683	M.RESISTOR CH 1/16W 68K	1	
R71,72		ERJ3GEYJ103	M.RESISTOR CH 1/16W 10K	2	
R73		ERJ3GEYJ153	M.RESISTOR CH 1/16W 15K	1	
R74		ERJ3GEYJ683	M.RESISTOR CH 1/16W 68K	1	
R86		ERJ6GEYJ103	M.RESISTOR CH 1/10W 10K	1	
R87		ERJ6GEYJ563	M.RESISTOR CH 1/10W 56K	1	
R88		ERJ6GEYJ104	M.RESISTOR CH 1/10W 100K	1	
R89,90		ERJ6GEYJ103	M.RESISTOR CH 1/10W 10K	2	
R91		ERJ3GEYJ103	M.RESISTOR CH 1/16W 10K	1	
R124		ERJ3GEYJ103	M.RESISTOR CH 1/16W 10K	1	
R150		ERJ3GEYJ183	M.RESISTOR CH 1/16W 18K	1	
R151		ERJ3GEYJ562	M.RESISTOR CH 1/16W 5.6K	1	
R152-54		ERJ3GEYJ103	M.RESISTOR CH 1/16W 10K	3	
R155		ERJ3GEY0R00	M.RESISTOR CH 1/16W 0	1	
R156-59		ERJ3GEYJ103	M.RESISTOR CH 1/16W 10K	4	
R161		ERJ3GEYJ562	M.RESISTOR CH 1/16W 5.6K	1	
R162		ERJ3GEYJ103	M.RESISTOR CH 1/16W 10K	1	
R177-79		ERJ3GEYJ470	M.RESISTOR CH 1/16W 47	3	
R190,91		ERJ3GEYJ472	M.RESISTOR CH 1/16W 4.7K	2	
R200-02		ERJ6GEYJ101	M.RESISTOR CH 1/10W 100	3	
R203		ERJ6GEYJ471	M.RESISTOR CH 1/10W 470	1	
R205-11		ERJ6GEYJ471	M.RESISTOR CH 1/10W 470	7	
R212		ERJ6GEYJ121	M.RESISTOR CH 1/10W 120	1	
R213		ERJ6GEYJ471	M.RESISTOR CH 1/10W 470	1	
R214		ERJ6GEYJ121	M.RESISTOR CH 1/10W 120	1	
R215-20		ERJ6GEYJ471	M.RESISTOR CH 1/10W 470	6	
R221-24		ERJ6GEYJ101	M.RESISTOR CH 1/10W 100	4	
R225-28		ERJ6GEYJ332	M.RESISTOR CH 1/10W 3.3K	4	
R229-32		ERJ6GEYJ121	M.RESISTOR CH 1/10W 120	4	
R233,34		ERJ6GEYJ470	M.RESISTOR CH 1/10W 47	2	
R237-40		ERJ6GEYJ820	M.RESISTOR CH 1/10W 82	4	
R241-44		ERJ6GEYJ471	M.RESISTOR CH 1/10W 470	4	
R297		ERJ6GEYJ470	M.RESISTOR CH 1/10W 47	1	
R300		ERJ6GEYJ101	M.RESISTOR CH 1/10W 100	1	
R301		ERJ6GEYJ102	M.RESISTOR CH 1/10W 1K	1	
R304-07		ERJ6GEYJ471	M.RESISTOR CH 1/10W 470	4	
R308		ERJ6GEYJ123	M.RESISTOR CH 1/10W 12K	1	
R309		ERJ6GEYJ821	M.RESISTOR CH 1/10W 820	1	
R310		ERJ6GEYJ330	M.RESISTOR CH 1/10W 33	1	
R311		ERJ6GEYJ470	M.RESISTOR CH 1/10W 47	1	
R312		ERJ6GEYJ330	M.RESISTOR CH 1/10W 33	1	
R313		ERJ6GEYJ470	M.RESISTOR CH 1/10W 47	1	
R314,15		ERJ6GEYJ331	M.RESISTOR CH 1/10W 330	2	
R316		ERJ6GEYJ104	M.RESISTOR CH 1/10W 100K	1	
R317		ERG2SG390	M.RESISTOR 2W 39	1	
R319		ERJ6GEYJ103	M.RESISTOR CH 1/10W 10K	1	
R320		ERJ6GEYJ472	M.RESISTOR CH 1/10W 4.7K	1	
R321,22		ERJ6GEYJ182	M.RESISTOR CH 1/10W 1.8K	2	
R330		ERJ6GEYJ101	M.RESISTOR CH 1/10W 100	1	
R331		ERJ6GEYJ102	M.RESISTOR CH 1/10W 1K	1	
R334-37		ERJ6GEYJ471	M.RESISTOR CH 1/10W 470	4	
R338		ERJ6GEYJ123	M.RESISTOR CH 1/10W 12K	1	
R339		ERJ6GEYJ821	M.RESISTOR CH 1/10W 820	1	
R340		ERJ6GEYJ330	M.RESISTOR CH 1/10W 33	1	
R341		ERJ6GEYJ470	M.RESISTOR CH 1/10W 47	1	
R342		ERJ6GEYJ330	M.RESISTOR CH 1/10W 33	1	
R343		ERJ6GEYJ470	M.RESISTOR CH 1/10W 47	1	
R344,45		ERJ6GEYJ331	M.RESISTOR CH 1/10W 330	2	
R346		ERJ6GEYJ104	M.RESISTOR CH 1/10W 100K	1	
R347		ERG2SG390	M.RESISTOR 2W 39	1	
R349		ERJ6GEYJ103	M.RESISTOR CH 1/10W 10K	1	
R350		ERJ6GEYJ472	M.RESISTOR CH 1/10W 4.7K	1	
R351,52		ERJ6GEYJ182	M.RESISTOR CH 1/10W 1.8K	2	
R360,61		ERJ6GEYJ123	M.RESISTOR CH 1/10W 12K	2	
R364		ERJ8GCYJ100	M.RESISTOR CH 1/8W 10	1	
R365,66		ERJ8GCYG151	C.RESISTOR CH 1/8W 150	2	
R370,71		ERJ6GEYJ123	M.RESISTOR CH 1/10W 12K	2	
R374		ERJ8GCYJ100	M.RESISTOR CH 1/8W 10	1	
R375,76		ERJ8GCYG151	C.RESISTOR CH 1/8W 150	2	
R380,81		ERJ3GEYJ183	M.RESISTOR CH 1/16W 18K	2	
R382,83		ERJ3GEYJ103	M.RESISTOR CH 1/16W 10K	2	
R384,85		ERJ3GEYJ470	M.RESISTOR CH 1/16W 47	2	
R482,83		ERJ3GEYJ103	M.RESISTOR CH 1/16W 10K	2	

CYL POWER VEP85040A

Ref.No.		Part No.	Part Name & Description	Pcs	Remarks
R500,01		ERJ3GEYJ102	M.RESISTOR CH 1/16W 1K	2	
R502,03		ERJ3GEYJ101	M.RESISTOR CH 1/16W 100	2	
R504		ERJ3GEYJ150	M.RESISTOR CH 1/16W 15	1	
R505,06		ERJ3GEYJ102	M.RESISTOR CH 1/16W 1K	2	
R508		ERJ3GEYJ470	M.RESISTOR CH 1/16W 47	1	
R509		ERJ3GEYJ151	M.RESISTOR CH 1/16W 150	1	
R510,11		ERJ3GEYJ102	M.RESISTOR CH 1/16W 1K	2	
R512,13		ERJ3GEYJ101	M.RESISTOR CH 1/16W 100	2	
R514		ERJ3GEYJ150	M.RESISTOR CH 1/16W 15	1	
R515,16		ERJ3GEYJ102	M.RESISTOR CH 1/16W 1K	2	
R518		ERJ3GEYJ470	M.RESISTOR CH 1/16W 47	1	
R519		ERJ3GEYJ151	M.RESISTOR CH 1/16W 150	1	
R529		ERJ3GEYJ151	M.RESISTOR CH 1/16W 150	1	
R539		ERJ3GEYJ151	M.RESISTOR CH 1/16W 150	1	
R540		ERJ3GEYJ102	M.RESISTOR CH 1/16W 1K	1	
R541		ERJ3GEYJ331	M.RESISTOR CH 1/16W 330	1	
R542		ERJ3GEYJ681	M.RESISTOR CH 1/16W 680	1	
R543		ERJ3GEYJ102	M.RESISTOR CH 1/16W 1K	1	
R544		ERJ3GEYJ103	M.RESISTOR CH 1/16W 10K	1	
R545		ERJ3GEYJ102	M.RESISTOR CH 1/16W 1K	1	
R546		ERJ3GEYJ101	M.RESISTOR CH 1/16W 100	1	
R547		ERJ3GEYJ331	M.RESISTOR CH 1/16W 330	1	
R548		ERJ3GEYJ821	M.RESISTOR CH 1/16W 820	1	
R549		ERJ3GEYJ182	M.RESISTOR CH 1/16W 1.8K	1	
R550		ERJ3GEYJ102	M.RESISTOR CH 1/16W 1K	1	
R551		ERJ3GEYJ332	M.RESISTOR CH 1/16W 3.3K	1	
R552		ERJ3GEYJ392	M.RESISTOR CH 1/16W 3.9K	1	
R553		ERJ3GEYJ391	M.RESISTOR CH 1/16W 390	1	
R554		ERJ3GEYJ153	M.RESISTOR CH 1/16W 15K	1	
R555-57		ERJ3GEYJ103	M.RESISTOR CH 1/16W 10K	3	
R558		ERJ3GEYJ470	M.RESISTOR CH 1/16W 47	1	
R560,61		ERJ3GEYJ470	M.RESISTOR CH 1/16W 47	2	
R600-15		ERJ3GEYJ101	M.RESISTOR CH 1/16W 100	16	
R620,21		ERJ6GEYJ103	M.RESISTOR CH 1/10W 10K	2	
R622		ERJ6GEYJ102	M.RESISTOR CH 1/10W 1K	1	
R623,24		ERJ6GEYJ103	M.RESISTOR CH 1/10W 10K	2	
R625		ERJ6GEYJ102	M.RESISTOR CH 1/10W 1K	1	
R650		ERJ6GEYJ123	M.RESISTOR CH 1/10W 12K	1	
R651		ERJ6GEYJ152	M.RESISTOR CH 1/10W 1.5K	1	
R652,53		ERJ6GEYJ123	M.RESISTOR CH 1/10W 12K	2	
R654		ERJ6GEYJ152	M.RESISTOR CH 1/10W 1.5K	1	
R655		ERJ6GEYJ123	M.RESISTOR CH 1/10W 12K	1	
RY1,Y2		VSY2069	RELAY	2	
T1,T2		VET0141	TRANSFORMER	2	
TP200-02		VJR0646	TEST POINT	3	
TP206-08		VJR0646	TEST POINT	3	
TP213,14		VJR0646	TEST POINT	2	
TP217,18		VJR0646	TEST POINT	2	
TP221		VJR0646	TEST POINT	1	
TPG2-G5		VJR0646	TEST POINT	4	
VC1,C2		ECV1ZW20X53T	V.CAPACITOR 20P	2	
VR3		VRV0109B501	V.RESISTOR 500	1	
VR4		VRV0109B502	V.RESISTOR 5K	1	
			MISCELLANEOUS		
		VMP3037	P.C.BOARD HOLDER ANGLE	1	
		VMP3038	P.C.BOARD HOLDER ANGLE	1	
		VMZ2138	BARRIER	1	

OTHER

Ref.No.		Part No.	Part Name & Description	Pcs	Remarks
		VSC2340	HEAT SINK	2	
		XTV3+6F	SCREW	6	
		XTV3+6FFR	SCREW	3	
	■	VEP85040A	P.C.BOARD W/COMPONENT		
			CYL POWER		
			CAPACITORS		
C5001		ECA1HXK220	.CAPACITOR V	1	
C5002		ECQB1H473JF	P.CAPACITOR 50V 0.047U	1	
C5003		ECQB1H392JF	.CAPACITOR V	1	
C5004		ECQB1H473JF	P.CAPACITOR 50V 0.047U	1	
C5005,06		ECA1HXK220	.CAPACITOR V	2	
C5007		ECA1HX1V101X	E.CAPACITOR 50V 100P	1	
C5008,09		ECQB1H104JF	P.CAPACITOR 50V 0.1U	2	
C5010,11		ECCD2H331J	C.CAPACITOR 500V 330	2	
C5020,21		ECQB1H104JF	P.CAPACITOR 50V 0.1U	2	
C5022		ECA1HXK220	.CAPACITOR V	1	
D5001-04		MA165VT	DIODE	4	
D5005,06		MA701A	DIODE	2	
HS5001		VSC3090		1	
IC5001		UPC494C	IC	1	
IC5002		AN7805F	IC	1	
IC5003		MC74HC04AN	IC	1	
IC5004		AN78N05	IC	1	
L5001		VLQ0242	COIL 30UH	1	
P5521		VJP1230T	CONNECTOR (MALE) 3P	1	
P5522		VJP1230R	CONNECTOR (MALE) 3P	1	
P5523		VJP3079		1	
P5525		VJP1232T	CONNECTOR (MALE) 5P	1	
P5526		VJP1231T	CONNECTOR (MALE) 4P	1	
P5527		VJP1230G	CONNECTOR (MALE) 3P	1	
P5708		VJP1143	CONNECTOR (MALE) 3P	1	
Q5001-04		2SB1321A	TRANSISTOR	4	
Q5005,06		2SK1059	TRANSISTOR	2	
			RESISTORS		
R5001		ERDS2TJ151	C.RESISTOR 1/4W 150	1	
R5002		ERDS2TJ512	C.RESISTOR 1/4W 5.1K	1	
R5003		ERDS2TJ332	C.RESISTOR 1/4W 3.3K	1	
R5004,05		ERDS2TJ222	C.RESISTOR 1/4W 2.2K	2	
R5006		ERDS2TJ472	C.RESISTOR 1/4W 4.7K	1	
R5007		ERDS2TJ562	C.RESISTOR 1/4W 5.6K	1	
R5008		ERDS2TJ272	C.RESISTOR 1/4W 2.7K	1	
R5009		ERDS2TJ223	C.RESISTOR 1/4W 22K	1	

MECA IF VEP80788A
SERVO CNTL VEP82097A

Ref.No.		Part No.	Part Name & Description	Pcs	Remarks
R5010,11		ERDS2TJ102	C.RESISTOR 1/4W 1K	2	
R5012		ERDS2TJ821	C.RESISTOR 1/4W 820	1	
R5013		ERDS2TJ562	C.RESISTOR 1/4W 5.6K	1	
R5014		ERDS2TJ272	C.RESISTOR 1/4W 2.7K	1	
R5015		ERDS2TJ221	C.RESISTOR 1/4W 220	1	
R5016		ERDS2TJ562	C.RESISTOR 1/4W 5.6K	1	
R5017		ERDS2TJ821	C.RESISTOR 1/4W 820	1	
R5018		ERDS2TJ272	C.RESISTOR 1/4W 2.7K	1	
R5019		ERDS2TJ221	C.RESISTOR 1/4W 220	1	
R5020		ERDS2TJ271	C.RESISTOR 1/4W 270	1	
R5021		ERDS2TJ103	C.RESISTOR 1/4W 10K	1	
R5022-24		ERDS2TJ560	C.RESISTOR 1/4W 56	3	
R5025		ERDS2TJ220	C.RESISTOR 1/4W 22	1	
TP5001-07		VJR0646	TEST POINT	7	
TPG5001,02		VJR0646	TEST POINT	2	
VR5001		VRV0064B502	V.RESISTOR 5K	1	
VR5002		VRV0064B501	V.RESISTOR 500	1	
			MISCELLANEOUS		
		VMP3270	P.C.BOARD HOLDER ANGLE	1	
		XNG26B	NUT	1	
		XTV3+6F	SCREW	2	
		XYNV26+K10	SCREW	1	
	■	VEP80788A	P.C.BOARD W/COMPONENT		
			MECA IF		
D1-D9		10E1	DIODE	9	
D10		10E1	DIODE	1	
D11,12		MA165	DIODE	2	
D13		10E1	DIODE	1	
P561		VJP1242T	CONNECTOR (MALE) 2P	1	
P562		VJP1243G	CONNECTOR (MALE) 3P	1	
P563		VJP3080		1	
P564		VJP1235T	CONNECTOR (MALE) 8P	1	
P565		VJP1247T	CONNECTOR (MALE) 7P	1	
P568		VJP1243T	CONNECTOR (MALE) 3P	1	
P569		VJP1230T	CONNECTOR (MALE) 3P	1	
P571		VJP1230R	CONNECTOR (MALE) 3P	1	
P572		VJP1232T	CONNECTOR (MALE) 5P	1	
P574		VJP1244G	CONNECTOR (MALE) 4P	1	
P575		VJP1244T	CONNECTOR (MALE) 4P	1	
P576		VJP1231R	CONNECTOR (MALE) 4P	1	
P577		VJP1231T	CONNECTOR (MALE) 4P	1	
P578		VJP1230R	CONNECTOR (MALE) 3P	1	
P579		VJP1230T	CONNECTOR (MALE) 3P	1	
P580		VJP1243G	CONNECTOR (MALE) 3P	1	
P581		VJP1230T	CONNECTOR (MALE) 3P	1	
P582		VJP1243T	CONNECTOR (MALE) 3P	1	
P583		VJP1230G	CONNECTOR (MALE) 3P	1	
P584		VJP1243T	CONNECTOR (MALE) 3P	1	
P585		VJP1243R	CONNECTOR (MALE) 3P	1	
P587,88		VJP3091		2	
P589		VJP3079		1	

Ref.No.		Part No.	Part Name & Description	Pcs	Remarks
P590,91		VJP1230T	CONNECTOR (MALE) 3P	2	
P595		VJP1230G	CONNECTOR (MALE) 3P	1	
P596		VJP1243T	CONNECTOR (MALE) 3P	1	
P597		VJP1230R	CONNECTOR (MALE) 3P	1	
P598		VJP1243R	CONNECTOR (MALE) 3P	1	
P599		VJP1244R	CONNECTOR (MALE) 4P	1	
P600		VJP3082	CONNECTOR	1	
P701		VJP3440A030	CONNECTOR	1	
P702		VJP3418A080	CONNECTOR	1	
P61021		VJP3091		1	
P61022		VJP1244T	CONNECTOR (MALE) 4P	1	
Q1		UN1212	TRANSISTOR	1	
Q2		2SB835	TRANSISTOR	1	
			RESISTORS		
R1-R8		ERDS2TJ181	C.RESISTOR 1/4W 180	8	
R10-15		ERDS2TJ181	C.RESISTOR 1/4W 180	6	
R16,17		ERDS2TJ151	C.RESISTOR 1/4W 150	2	
R19		ERDS2TJ332	C.RESISTOR 1/4W 3.3K	1	
R20		ERDS2TJ103	C.RESISTOR 1/4W 10K	1	
			MISCELLANEOUS		
		VHN0011	NYLON NUT	4	
		VMX1185	SPACER	5	
		VMZ2143	BARRIER	1	
		VMZ2144	BARRIER	2	
	■	VEP82097A	P.C.BOARD W/COMPONENT		
			SERVO CNTL		
			CAPACITORS		
C1		ECEV1HV010	E.CAPACITOR 50V 1U	1	
C2,C3		ECEV1EV330	E.CAPACITOR 25V 33U	2	
C4,C5		ECEV1CV470	E.CAPACITOR 16V 47U	2	
C6-C9		ECUM1H103ZFN	C.CAPACITOR CH 50V 0.01U	4	
C10,11		ECUM1H561JCN	C.CAPACITOR CH 50V 560P	2	
C12-14		ECUM1H330JCN	C.CAPACITOR CH 50V 33P	3	
C15		ECUM1H102JCN	C.CAPACITOR CH 50V 1000P	1	
C16-24		ECUM1H103ZFN	C.CAPACITOR CH 50V 0.01U	9	
C25		ECUM1H391JCN	C.CAPACITOR CH 50V 390P	1	
C26-28		ECUM1H330JCN	C.CAPACITOR CH 50V 33P	3	
C29-31		ECUM1H103ZFN	C.CAPACITOR CH 50V 0.01U	3	
C32		ECUM1H102JCN	C.CAPACITOR CH 50V 1000P	1	
C33		ECUM1H103ZFN	C.CAPACITOR CH 50V 0.01U	1	
C34,35		ECUM1H101JCN	C.CAPACITOR CH 50V 100P	2	
C36		ECUM1H103KBN	C.CAPACITOR CH 50V 0.01U	1	
C37-44		ECUM1H103ZFN	C.CAPACITOR CH 50V 0.01U	8	
D1		MA157	DIODE	1	
IC1-C3		VLF0931	COIL	3	
IC4		NJM79L12UA	IC	1	
IC5		NJM78L12UA	IC	1	
IC6,C7		NJM78L05UA	IC	2	

HEAD CONECTION VEP80785A
EM EJECT VEP82098A　　SERIAL IF VEP88098A

Ref.No.		Part No.	Part Name & Description	Pcs	Remarks
IC8		UPC4558G2	IC	1	
IC9		NJM4580ED	IC	1	
IC10,11		NJM4580ED	IC	2	
IC12		NJM2903M	IC	1	
IC13,14		AD707KR	IC	2	
IC15		NJM4580ED	IC	1	
P1		VJP1231T	CONNECTOR (MALE) 4P	1	
P2		VJP1231G	CONNECTOR (MALE) 4P	1	
P3		VJP1231R	CONNECTOR (MALE) 4P	1	
P4		VJP1231B	CONNECTOR (MALE) 4P	1	
P6		VJP1230T	CONNECTOR (MALE) 3P	1	
P7		VJP1230R	CONNECTOR (MALE) 3P	1	
P8		VJP3082	CONNECTOR	1	
P9		VJP3081	CONNECTOR	1	
Q1		2SD601-R	TRANSISTOR CHIP	1	(Q,R)
			RESISTORS		
R1,R2		VRE0034E683	M.RESISTOR CH 1/10W 68K	2	
R3		ERJ6GEYJ562	M.RESISTOR CH 1/10W 5.6K	1	
R4		VRE0034E562	M.RESISTOR CH 1/10W 5.6K	1	
R5		ERJ6GEYJ562	M.RESISTOR CH 1/10W 5.6K	1	
R6		VRE0034E562	M.RESISTOR CH 1/10W 5.6K	1	
R7,R8		VRE0034E683	M.RESISTOR CH 1/10W 68K	2	
R9		ERJ6GEYJ562	M.RESISTOR CH 1/10W 5.6K	1	
R10		VRE0034E562	M.RESISTOR CH 1/10W 5.6K	1	
R11		ERJ6GEYJ562	M.RESISTOR CH 1/10W 5.6K	1	
R12		VRE0034E562	M.RESISTOR CH 1/10W 5.6K	1	
R13,14		ERJ6GEYJ562	M.RESISTOR CH 1/10W 5.6K	2	
R15		VRE0034E821	M.RESISTOR CH 1/10W 820	1	
R16		VRE0034E100	M.RESISTOR CH 1/10W 10	1	
R17		ERJ6GEYJ272	M.RESISTOR CH 1/10W 2.7K	1	
R18		ERJ6GEYJ474	M.RESISTOR CH 1/10W 470K	1	
R19,20		ERJ6GEYJ394	M.RESISTOR CH 1/10W 390K	2	
R21		ERJ6GEYJ274	M.RESISTOR CH 1/10W 270K	1	
R22-24		ERJ6GEYJ223	M.RESISTOR CH 1/10W 22K	3	
R25-27		ERJ6GEYJ393	M.RESISTOR CH 1/10W 39K	3	
R28		ERJ6GEYJ153	M.RESISTOR CH 1/10W 15K	1	
R29-31		ERJ6GEYJ103	M.RESISTOR CH 1/10W 10K	3	
R32-34		ERJ6GEYJ563	M.RESISTOR CH 1/10W 56K	3	
R35		ERJ6GEYJ272	M.RESISTOR CH 1/10W 2.7K	1	
R36		ERJ6GEYJ103	M.RESISTOR CH 1/10W 10K	1	
R37		ERJ6GEYJ223	M.RESISTOR CH 1/10W 22K	1	
R38		ERJ6GEYJ155	.RESISTOR W	1	
R39		ERJ6GEYJ104	M.RESISTOR CH 1/10W 100K	1	
R40,41		ERJ6GEYJ332	M.RESISTOR CH 1/10W 3.3K	2	
R42		ERJ6GEYJ474	M.RESISTOR CH 1/10W 470K	1	
R43,44		ERJ6GEYJ394	M.RESISTOR CH 1/10W 390K	2	
R45		VRE0034E102	M.RESISTOR CH 1/10W 1K	1	
R46-48		ERJ6GEYJ223	M.RESISTOR CH 1/10W 22K	3	
R49		ERJ6GEYJ394	M.RESISTOR CH 1/10W 390K	1	
R50		ERJ6GEYJ103	M.RESISTOR CH 1/10W 10K	1	
R51		VRE0034E102	M.RESISTOR CH 1/10W 1K	1	
R52		ERJ6GEYJ393	M.RESISTOR CH 1/10W 39K	1	
R53-57		ERJ6GEYJ103	M.RESISTOR CH 1/10W 10K	5	
R58,59		ERJ6GEYJ393	M.RESISTOR CH 1/10W 39K	2	
R60-62		ERJ6GEYJ563	M.RESISTOR CH 1/10W 56K	3	
R63		ERJ6GEYJ561	M.RESISTOR CH 1/10W 560	1	
R64		ERJ6GEYJ221	M.RESISTOR CH 1/10W 220	1	
R65,66		ERJ6GEYJ820	M.RESISTOR CH 1/10W 82	2	
R67		ERJ6GEYJ221	M.RESISTOR CH 1/10W 220	1	
R68,69		ERJ6GEYJ820	M.RESISTOR CH 1/10W 82	2	
TP1,P2		VJR0646	TEST POINT	2	
TPG		VJR0646	TEST POINT	1	

Ref.No.		Part No.	Part Name & Description	Pcs	Remarks
VR1		VRV0064B104	V.RESISTOR 100K	1	
VR2		VRV0064B202	V.RESISTOR 2K	1	
			MISCELLANEOUS		
		VMA8463	ANGLE	1	
		XTV26+6F	SCREW	4	
	■	VEP80785A	P.C.BOARD W/COMPONENT		
			HEAD CONECTION		
P2		VJP1230T	CONNECTOR (MALE) 3P	1	
P3		VJP3080		1	
P4		VJP1230G	CONNECTOR (MALE) 3P	1	
P6		VJP3083		1	
P9		VJP1230B	CONNECTOR (MALE) 3P	1	
P13		VJP1233T	CONNECTOR (MALE) 6P	1	
			MISCELLANEOUS		
		VMX1305	SPACER	2	
		VMX1411	SPACER	2	
	■	VEP82098A	P.C.BOARD W/COMPONENT		
			EM EJECT		
P1,P2		VJP3082	CONNECTOR	2	
	■	VEP88098A	P.C.BOARD W/COMPONENT		
			SERIAL IF		
			CAPACITORS		
C8011		ECEV1EV100	E.CAPACITOR 25V 10U	1	
C8012		ECUX1H301JCV	.CAPACITOR V	1	
C8013,14		ECEV1HN4R7	.CAPACITOR V	2	
C8015-22		ECUM1E104KBN	C.CAPACITOR 25V 0.1U	8	
C8023,24		ECEV1EV100	E.CAPACITOR 25V 10U	2	
C8026,27		ECUX1H470JCV	C.CAPACITOR 50V 47P	2	
C8028-39		ECUX1H103KBV	C.CAPACITOR CH 50V 0.01U	12	
C8041-44		ECEV1CV470	E.CAPACITOR 16V 47U	4	
C8045-48		ECUX1H103KBV	C.CAPACITOR CH 50V 0.01U	4	
C8912-70		ECUM1H103ZFN	C.CAPACITOR CH 50V 0.01U	59	

AUDIO JACK VEP84157A

Ref.No.		Part No.	Part Name & Description	Pcs	Remarks
D8001,02		MA151K	DIODE	2	
D8003-06		MA157	DIODE	4	
D8007		MA151K	DIODE	1	
FL8001,02		VLF0931	COIL	2	
IC8002		CG21503-132	IC	1	
IC8003-05		MC10H124M	IC	3	
IC8006		STV1601A	IC	1	
IC8007,08		74F574SJ	IC	2	
IC8009-11		MC10H124M	IC	3	
IC8012		SN75158P	IC	1	
IC8018		SN74AS74NS	IC	1	
IC8019		DS9637ACN	IC	1	
IC8020		SN74LS244NS	IC	1	
IC8022		SN74LS157NS	IC	1	
IC8033		STV1602A	IC	1	
IC8034		MC74HC04AF	IC	1	
IC8035-37		MC10H125M	IC	3	
IC8038		CG21503-131	IC	1	
IC8040-42		SN74S1051NS	IC	3	
IC8043		MC74HC08AF	IC	1	
IC8045		SN74AS244NS	IC	1	
IC8046-48		MC10H125M	IC	3	
IC8049		MC74HC573AF	IC	1	
IC8050		MC74HC138AF	IC	1	
IC8051		MC74HC02AF	IC	1	
L8001		VLQ0188KR39N	COIL 0.39UH	1	
P8001		VJS3375B080	CONNECTOR	1	
P8002		VJP3461	CONNECTOR	1	
P8003		VJP1232T	CONNECTOR (MALE) 5P	1	
P8004		VJP1230T	CONNECTOR (MALE) 3P	1	
P8007		VJP3440B012	CONNECTOR	1	
			RESISTORS		
R8015-36		ERJ3GEYJ471	M.RESISTOR CH 1/16W 470	22	
R8079		ERJ3GEYJ102	M.RESISTOR CH 1/16W 1K	1	
R8080		ERJ3GEYJ103	M.RESISTOR CH 1/16W 10K	1	
R8081		ERJ3GEYJ102	M.RESISTOR CH 1/16W 1K	1	
R8082-03		ERJ3GEYJ471	M.RESISTOR CH 1/16W 470	22	
R8104,05		ERJ3GEYJ102	M.RESISTOR CH 1/16W 1K	2	
R8106,07		ERJ3GEYJ101	M.RESISTOR CH 1/16W 100	2	
R8113		ERJ3GEYJ102	M.RESISTOR CH 1/16W 1K	1	
R8115,16		ERJ3GEYJ101	M.RESISTOR CH 1/16W 100	2	
R8121-24		ERJ3GEYJ471	M.RESISTOR CH 1/16W 470	4	
R8126-32		ERJ3GEYJ471	M.RESISTOR CH 1/16W 470	7	
R8135		ERJ3GEYJ471	M.RESISTOR CH 1/16W 470	1	
R8139		ERJ3GEYJ223	M.RESISTOR CH 1/16W 22K	1	
R8140		VRE0034E750	M.RESISTOR CH 1/10W 75	1	
R8141		ERJ3GEYJ101	M.RESISTOR CH 1/16W 100	1	
R8142		ERJ3GEYJ104	M.RESISTOR CH 1/16W 100K	1	
R8180		ERJ3GEYJ103	M.RESISTOR CH 1/16W 10K	1	
R8185-08		ERJ3GEYJ560	M.RESISTOR CH 1/16W 56	24	
R8209		ERJ3GEYJ103	M.RESISTOR CH 1/16W 10K	1	
R8211		ERJ3GEYJ102	M.RESISTOR CH 1/16W 1K	1	
R8300		ERJ3GEYJ102	M.RESISTOR CH 1/16W 1K	1	
R8302-27		ERJ3GEYJ102	M.RESISTOR CH 1/16W 1K	26	
R8329-36		ERJ3GEYJ102	M.RESISTOR CH 1/16W 1K	8	
R8338-56		ERJ3GEYJ102	M.RESISTOR CH 1/16W 1K	19	
R8400-05		ERJ3GEYJ102	M.RESISTOR CH 1/16W 1K	6	
R8408,09		ERJ3GEYJ102	M.RESISTOR CH 1/16W 1K	2	

Ref.No.		Part No.	Part Name & Description	Pcs	Remarks
R8411-33		ERJ3GEYJ102	M.RESISTOR CH 1/16W 1K	23	
SW8002,03		VSS0342	SWITCH	2	
T8001-04		VLT0654		4	
TP8013,14		VJR0646	TEST POINT	2	
TP8019,20		VJR0646	TEST POINT	2	
TP8023		VJR0646	TEST POINT	1	
TP8300-19		VJR0548	PIN	20	
TP8400-30		VJR0548	PIN	31	
TPG8021,22		VJR0646	TEST POINT	2	
VR8001,02		VRV0109B103	V.RESISTOR 10K	2	
			MISCELLANEOUS		
		VJF0818	HOLDER	2	
		VJF0961	HOLDER	3	
		VSC1381	HEAT SINK	2	
		VSC1382	HEAT SINK	2	
	■	VEP84157A	P.C.BOARD W/COMPONENT		
			AUDIO JACK		
			CAPACITORS		
C4001-18		ECUM1H103ZFN	C.CAPACITOR CH 50V 0.01U	18	
J4001,02		VJS3417		2	
J4003,04		VJP3417		2	
J4005		VJS3417		1	
J4006		VJP3417		1	
J4007-11		VJS3417		5	
J4012-18		VJP3417		7	
P401		VJP3440B012	CONNECTOR	1	
P402		VJP3440B016	CONNECTOR	1	
P403		VJP3440B006	CONNECTOR	1	
P404		VJP3440B022	CONNECTOR	1	
			RESISTORS		
R4001		ERJ6GEY0R00	M.RESISTOR CH 1/10W 0	1	
R4003		ERJ6GEY0R00	M.RESISTOR CH 1/10W 0	1	
R4005		ERJ6GEY0R00	M.RESISTOR CH 1/10W 0	1	
R4007		ERJ6GEY0R00	M.RESISTOR CH 1/10W 0	1	
R4009		ERJ6GEY0R00	M.RESISTOR CH 1/10W 0	1	
R4011		ERJ6GEY0R00	M.RESISTOR CH 1/10W 0	1	
R4013		ERJ6GEY0R00	M.RESISTOR CH 1/10W 0	1	
R4015		ERJ6GEY0R00	M.RESISTOR CH 1/10W 0	1	
R4017		ERJ6GEY0R00	M.RESISTOR CH 1/10W 0	1	

VIDEO JACK VEP88099A
SERIAL I/O VEP88106A

Ref.No.		Part No.	Part Name & Description	Pcs	Remarks
R4019		ERJ6GEY0R00	M.RESISTOR CH 1/10W 0	1	
R4021		ERJ6GEY0R00	M.RESISTOR CH 1/10W 0	1	
R4023		ERJ6GEY0R00	M.RESISTOR CH 1/10W 0	1	
R4025		ERJ6GEY0R00	M.RESISTOR CH 1/10W 0	1	
R4027		ERJ6GEY0R00	M.RESISTOR CH 1/10W 0	1	
R4029		ERJ6GEY0R00	M.RESISTOR CH 1/10W 0	1	
R4031		ERJ6GEY0R00	M.RESISTOR CH 1/10W 0	1	
R4033		ERJ6GEY0R00	M.RESISTOR CH 1/10W 0	1	
R4035		ERJ6GEY0R00	M.RESISTOR CH 1/10W 0	1	
R4037		ERJ6GEY0R00	M.RESISTOR CH 1/10W 0	1	
R4039		ERJ6GEY0R00	M.RESISTOR CH 1/10W 0	1	
R4041		ERJ6GEY0R00	M.RESISTOR CH 1/10W 0	1	
R4043		ERJ6GEY0R00	M.RESISTOR CH 1/10W 0	1	
R4045		ERJ6GEY0R00	M.RESISTOR CH 1/10W 0	1	
R4047		ERJ6GEY0R00	M.RESISTOR CH 1/10W 0	1	
R4049		ERJ6GEY0R00	M.RESISTOR CH 1/10W 0	1	
R4051		ERJ6GEY0R00	M.RESISTOR CH 1/10W 0	1	
R4053		ERJ6GEY0R00	M.RESISTOR CH 1/10W 0	1	
R4055		ERJ6GEY0R00	M.RESISTOR CH 1/10W 0	1	
	■	VEP88099A	P.C.BOARD W/COMPONENT		
			VIDEO JACK		
			CAPACITORS		
C1		ECEV1CV470	E.CAPACITOR 16V 47U	1	
C2,C3		ECUM1H104ZFN	C.CAPACITOR CH 50V 0.1U	2	
C4		ECEV1CV470	E.CAPACITOR 16V 47U	1	
C5,C6		ECUM1H104ZFN	C.CAPACITOR CH 50V 0.1U	2	
C7-C9		ECUM1H104ZFN	C.CAPACITOR CH 50V 0.1U	3	
C10		ECUM1H104ZFN	C.CAPACITOR CH 50V 0.1U	1	
C11		ECEV1CV470	E.CAPACITOR 16V 47U	1	
C12		ECUM1H104ZFN	C.CAPACITOR CH 50V 0.1U	1	
C13		ECUM1E104KBN	C.CAPACITOR 25V 0.1U	1	
C14		ECUM1H150JCN	C.CAPACITOR CH 50V 15P	1	
C15		ECUM1H390JCN	C.CAPACITOR CH 50V 39P	1	
C16		ECUM1H104ZFN	C.CAPACITOR CH 50V 0.1U	1	
C17		ECEV1CV470	E.CAPACITOR 16V 47U	1	
C18		ECUM1H104ZFN	C.CAPACITOR CH 50V 0.1U	1	
C20		ECEV1CV470L	E.CAPACITOR 16V 47U	1	
C21,22		ECUM1H104ZFN	C.CAPACITOR CH 50V 0.1U	2	
C23-28		ECUM1H104ZFN	C.CAPACITOR CH 50V 0.1U	6	
D1,D2		MA151K	DIODE	2	
IC1		NJM78L09UA	IC	1	
IC2		NJM79L09UA	IC	1	
IC3		NJM78L12UA	IC	1	
IC4		NJM79L12UA	IC	1	
IC5		EL2044CS	IC	1	
IC6		UPD71055GB	IC	1	
IC12		MC74HC04AF	IC	1	
J1-J9		VJS3459		9	
J11,12		VJP3414A009		2	
J13		VJP3414A015		1	
J14,15		VJP3414A025		2	
L1		VLQ0319K390	COIL 39UH	1	

Ref.No.		Part No.	Part Name & Description	Pcs	Remarks
P410		VJP3418B040	CONNECTOR	1	
P411		VJP3416	CONNECTOR	1	
P412		VJP1874T	CONNECTOR	1	
P413		VJP3415	CONNECTOR	1	
Q1		2SA1254	TRANSISTOR	1	
Q2		2SC2188	TRANSISTOR	1	
Q3		2SA1254	TRANSISTOR	1	
Q4		2SC2188	TRANSISTOR	1	
Q10-20		UN2213	TRANSISTOR-RESISTOR	11	
			RESISTORS		
R1,R2		VRE0034E750	M.RESISTOR CH 1/10W 75	2	
R3		ERJ6GEYJ334	M.RESISTOR CH 1/10W 330K	1	
R4		ERJ6GEYJ332	M.RESISTOR CH 1/10W 3.3K	1	
R5,R6		ERJ6GEYJ470	M.RESISTOR CH 1/10W 47	2	
R7		ERJ6GEYJ102	M.RESISTOR CH 1/10W 1K	1	
R8		ERJ6GEYJ330	M.RESISTOR CH 1/10W 33	1	
R9		ERJ6GEYJ334	M.RESISTOR CH 1/10W 330K	1	
R10		ERJ6GEYJ332	M.RESISTOR CH 1/10W 3.3K	1	
R11,12		ERJ6GEYJ470	M.RESISTOR CH 1/10W 47	2	
R13		ERJ6GEYJ102	M.RESISTOR CH 1/10W 1K	1	
R14		ERJ6GEYJ330	M.RESISTOR CH 1/10W 33	1	
R15,16		ERJ6GEYJ100	M.RESISTOR CH 1/10W 10	2	
R17,18		ERJ6GEYJ470	M.RESISTOR CH 1/10W 47	2	
R19		ERJ6GEYJ102	M.RESISTOR CH 1/10W 1K	1	
R20		ERJ6GEYJ103	M.RESISTOR CH 1/10W 10K	1	
R21		ERJ6GEYJ152	M.RESISTOR CH 1/10W 1.5K	1	
R26		VRE0034E750	M.RESISTOR CH 1/10W 75	1	
R30-51		ERJ6GEYJ103	M.RESISTOR CH 1/10W 10K	22	
R52-54		ERJ6GEY0R00	M.RESISTOR CH 1/10W 0	3	
SW1,W2		VSS0307	SWITCH	2	
			MISCELLANEOUS		
		VMP3968	P.C.BOARD HOLDER ANGLE	1	
	■	VEP88106A	P.C.BOARD W/COMPONENT		
			SERIAL I/O		
			CAPACITORS		
C100		ECUM1E104KBN	C.CAPACITOR 25V 0.1U	1	
C101		ECEV1CV470	E.CAPACITOR 16V 47U	1	
C102		ECUM1H104ZFN	C.CAPACITOR CH 50V 0.1U	1	
C103-11		ECUM1E104KBN	C.CAPACITOR 25V 0.1U	9	
C112		ECEV1CV100	E.CAPACITOR 16V 10U	1	
IC101		STV1389AQ	IC	1	
J16-19		VJS3463		4	

POWER 1 VEP81067A
POWER 1 SUB VEP81070A

Ref.No.		Part No.	Part Name & Description	Pcs	Remarks
P420		VJP3416	CONNECTOR	1	
Q1,Q2		2SC2671	TRANSISTOR	2	
			RESISTORS		
R101,02		ERJ6GEYJ221	M.RESISTOR CH 1/10W 220	2	
R103		ERJ6GEYJ121	M.RESISTOR CH 1/10W 120	1	
R104,05		ERJ6GEYJ330	M.RESISTOR CH 1/10W 33	2	
R106		ERJ6GEYJ820	M.RESISTOR CH 1/10W 82	1	
R107,08		VRE0034E750	M.RESISTOR CH 1/10W 75	2	
R109		ERJ6GEYJ103	M.RESISTOR CH 1/10W 10K	1	
R110,11		ERJ6GEYJ221	M.RESISTOR CH 1/10W 220	2	
R112,13		ERJ6GEYJ100	M.RESISTOR CH 1/10W 10	2	
R114-16		ERJ6GEYJ151	M.RESISTOR CH 1/10W 150	3	
R117		VRE0034E750	M.RESISTOR CH 1/10W 75	1	
R118		ERJ6GEYJ103	M.RESISTOR CH 1/10W 10K	1	
R119,20		ERJ6GEYJ151	M.RESISTOR CH 1/10W 150	2	
R121		VRE0034E750	M.RESISTOR CH 1/10W 75	1	
R122		ERJ6GEYJ103	M.RESISTOR CH 1/10W 10K	1	
R123		VRE0034E750	M.RESISTOR CH 1/10W 75	1	
R124		ERJ6GEYJ103	M.RESISTOR CH 1/10W 10K	1	
	■	VEP81067A	P.C.BOARD W/COMPONENT		
			POWER 1		
	■	VEP81070A	P.C.BOARD W/COMPONENT		FOR VEP81067A
			POWER 1 SUB		
	■	VEP81072A	P.C.BOARD W/COMPONENT		FOR VEP81067A
			POWER 2 SUB		
			CAPACITORS		
C1008		ECQU2A224MN	P.CAPACITOR 250V 0.22U	1	
C1009		ECQE2A104KF	.CAPACITOR V	1	
C1010		ECEA2GGE100	.CAPACITOR V	1	
C1011		ECA1CXS100	.CAPACITOR V	1	
C1012		ECQV1H105J	.CAPACITOR V	1	
C1013		ECQE2A223KF	.CAPACITOR V	1	
C1014-17		ECOS2EB102E	.CAPACITOR V	4	
C1020		ECKD3A331KB	C.CAPACITOR 1KV 330P	1	
C1021		ECQB1H472JF		1	
C1022		ECA1CXK101F	.CAPACITOR V	1	
C1023		ECA1HXS010	.CAPACITOR V	1	
C1024,25		ECA1HXLV470G	.CAPACITOR V	2	
C1080		ECA1VXK470F	.CAPACITOR V	1	
C1081		ECA1HXKN010F	.CAPACITOR V	1	
C1086		ECA1HXKN010F	.CAPACITOR V	1	
C1090		ECA1VXK470F	.CAPACITOR V	1	
C1091		ECA1HXKN010F	.CAPACITOR V	1	
C1096		ECA1HXKN010F	.CAPACITOR V	1	
C1102		ECUM1H103ZFN	C.CAPACITOR CH 50V 0.01U	1	
C1103		ECEV1CV470	E.CAPACITOR 16V 47U	1	
C1104		ECUM1H104ZFN	C.CAPACITOR CH 50V 0.1U	1	
C1105		ECUM1H472KBN	C.CAPACITOR CH 50V 4700P	1	
C1106		ECEV1CV100	E.CAPACITOR 16V 10U	1	
C1107		ECUM1H103ZFN	C.CAPACITOR CH 50V 0.01U	1	
C1108		ECEV1CV100	E.CAPACITOR 16V 10U	1	
C1112		ECUM1E224ZFM	C.CAPACITOR CH 25V 0.22U	1	
C1113		ECUM1H102JCN	C.CAPACITOR CH 50V 1000P	1	
C1114		ECEV1EV100	E.CAPACITOR 25V 10U	1	
C1115		ECUM1H472KBN	C.CAPACITOR CH 50V 4700P	1	
C1116		ECUM1H473ZFN	C.CAPACITOR CH 50V 0.047U	1	
C1117		ECEV1CV470	E.CAPACITOR 16V 47U	1	

POWER 2 SUB VEP81072A

Ref.No.		Part No.	Part Name & Description	Pcs	Remarks
CN1001		VJP3117		1	
CN1101		VJR0164	PACK PIN	1	
			CAPACITORS		
C1008S		VMZ1798	.CAPACITOR V	1	
D1001-04		ERC25-04	DIODE	4	
D1005		D10XB60H	DIODE	1	
D1010		D1N60		1	
D1020,21		ERB35-02	DIODE	2	
D1022		11DQ04	DIODE	1	
D1023		11DQ06	DIODE	1	
D1080,81		11DQ04	DIODE	2	
D1085,86		11DQ04	DIODE	2	
D1090,91		11DQ04	DIODE	2	
D1095,96		11DQ04	DIODE	2	
D1100		10E1	DIODE	1	
D1101		MA3047-M	DIODE	1	
D1102		MA151K	DIODE	1	
D1103		MA151WA	DIODE	1	
D1104		MA151K	DIODE	1	
D1106		MA3075M	DIODE	1	
D1107		MA153	DIODE	1	
D1108		MA3047-M	DIODE	1	
DZ1020		RD5.1ESB3		1	
IC1001		MK1110	IC	1	
IC1101,02		TL495CN	IC	2	
IC1103		UPC339G2	IC	1	
IC1104		MN4013BS	IC	1	
IC1105		UPC4556G2		1	
IC1106		TLA31CLP	IC	1	
JP4		VJP1145		1	
Q1001-04		2SC3528	TRANSISTOR	4	
Q1020		2SC3979	TRANSISTOR	1	
Q1021		2SD637	TRANSISTOR	1	
Q1022		2SB644	TRANSISTOR	1	
Q1080		2SA1096	TRANSISTOR	1	
Q1085		2SA1096	TRANSISTOR	1	
Q1090		2SA1096	TRANSISTOR	1	
Q1095		2SA1096	TRANSISTOR	1	
Q1101		UN2113	TRANSISTOR-RESISTOR	1	
Q1103		UN2113	TRANSISTOR-RESISTOR	1	
Q1104		2SB710-R	TRANSISTOR CHIP	1	(R)
Q1105		2SD602-R	TRANSISTOR	1	
Q1106		UN2213	TRANSISTOR-RESISTOR	1	
Q1107		2SD602-R	TRANSISTOR	1	
Q1110,11		UN2213	TRANSISTOR-RESISTOR	2	
Q1112,13		2SB710-R	TRANSISTOR CHIP	2	(R)
Q1114		UN2213	TRANSISTOR-RESISTOR	1	
			RESISTORS		

POWER 2 VEP81068A

Ref.No.		Part No.	Part Name & Description	Pcs	Remarks
R1002-04		VRE0086	.RESISTOR W	3	
R1005		ERDS1TJ101	C.RESISTOR 1/2W 100	1	
R1006		ERG3SJ101	.RESISTOR W	1	
R1018,19		ERG2SJ333	M.RESISTOR 2W 33K	2	
R1020,21		ERDS1TJ104	C.RESISTOR 1/2W 100K	2	
R1022		ERG2SJ101	M.RESISTOR 2W 100	1	
R1023		ERDS2TJ2R2	C.RESISTOR 1/4W 2.2	1	
R1024,25		ERDS2TJ101	C.RESISTOR 1/4W 100	2	
R1026,27		ERDS2TJ102	C.RESISTOR 1/4W 1K	2	
R1028		ERDS2TJ101	C.RESISTOR 1/4W 100	1	
R1080		ERDS2TJ101	C.RESISTOR 1/4W 100	1	
R1081		ERX1SJ5R1	M.RESISTOR 1W 5.1	1	
R1082		ERDS1TJ100	C.RESISTOR 1/2W 10	1	
R1085		ERDS2TJ101	C.RESISTOR 1/4W 100	1	
R1086		ERX1SJ5R1	M.RESISTOR 1W 5.1	1	
R1087		ERDS1TJ100	C.RESISTOR 1/2W 10	1	
R1090		ERDS2TJ101	C.RESISTOR 1/4W 100	1	
R1091		ERX1SJ5R1	M.RESISTOR 1W 5.1	1	
R1093		ERDS1TJ100	C.RESISTOR 1/2W 10	1	
R1095		ERDS2TJ101	C.RESISTOR 1/4W 100	1	
R1096		ERX1SJ5R1	M.RESISTOR 1W 5.1	1	
R1097		ERDS1TJ100	C.RESISTOR 1/2W 10	1	
R1100		ERDS2TJ680	C.RESISTOR 1/4W 68	1	
R1101		ERJ6GEYJ472	M.RESISTOR CH 1/10W 4.7K	1	
R1102		ERJ6GEYJ331	M.RESISTOR CH 1/10W 330	1	
R1103		ERJ6GEYJ103	M.RESISTOR CH 1/10W 10K	1	
R1104		ERJ6GEYJ181	M.RESISTOR CH 1/10W 180	1	
R1105,06		ERJ6GEYJ222	M.RESISTOR CH 1/10W 2.2K	2	
R1107		ERJ6GEYJ223	M.RESISTOR CH 1/10W 22K	1	
R1108		ERJ6GEYJ101	M.RESISTOR CH 1/10W 100	1	
R1109		ERJ6GEYJ561	M.RESISTOR CH 1/10W 560	1	
R1110		ERJ6GEYJ101	M.RESISTOR CH 1/10W 100	1	
R1115		ERJ6GEYJ103	M.RESISTOR CH 1/10W 10K	1	
R1118		ERJ6GEYJ153	M.RESISTOR CH 1/10W 15K	1	
R1119		ERJ6GEYJ222	M.RESISTOR CH 1/10W 2.2K	1	
R1120		ERJ6GEYJ223	M.RESISTOR CH 1/10W 22K	1	
R1121		ERJ6GEYJ123	M.RESISTOR CH 1/10W 12K	1	
R1122		ERJ6GEYJ124	M.RESISTOR CH 1/10W 120K	1	
R1123		ERJ6GEYJ102	M.RESISTOR CH 1/10W 1K	1	
R1125		ERJ6GEYJ102	M.RESISTOR CH 1/10W 1K	1	
R1126		ERJ6GEYJ223	M.RESISTOR CH 1/10W 22K	1	
R1127-29		ERJ6GEYJ473	M.RESISTOR CH 1/10W 47K	3	
R1130		ERJ6GEYJ221	M.RESISTOR CH 1/10W 220	1	
R1131		VRE0034E562	M.RESISTOR CH 1/10W 5.6K	1	
R1132		VRE0034E432	M.RESISTOR CH 1/10W 4.3K	1	
R1133		ERJ6GEYJ303	.RESISTOR W	1	
R1134		ERJ6GEYJ133	M.RESISOTR CH 1/10W 13K	1	
R1135		ERJ6GEYJ331	M.RESISTOR CH 1/10W 330	1	
R1136,37		ERJ6GEYJ103	M.RESISTOR CH 1/10W 10K	2	
R1138		VRE0034E512	M.RESISTOR CH 1/10W 5.1K	1	
R1142		ERJ6GEYJ103	M.RESISTOR CH 1/10W 10K	1	
R1143		ERJ6GEYJ331	M.RESISTOR CH 1/10W 330	1	
R1144,45		ERJ6GEYJ222	M.RESISTOR CH 1/10W 2.2K	2	
R1147		ERJ6GEYJ103	M.RESISTOR CH 1/10W 10K	1	
R1148		ERJ6GEYJ223	M.RESISTOR CH 1/10W 22K	1	
R1149		ERJ6GEYJ101	M.RESISTOR CH 1/10W 100	1	
R1150		ERJ6GEYJ392	M.RESISTOR CH 1/10W 3.9K	1	
R1154		ERJ6GEYJ103	M.RESISTOR CH 1/10W 10K	1	
R1155		ERJ6GEYJ101	M.RESISTOR CH 1/10W 100	1	
R1157		ERJ6GEYJ102	M.RESISTOR CH 1/10W 1K	1	
R1158		ERJ6GEYJ103	M.RESISTOR CH 1/10W 10K	1	
R1159		ERJ6GEYJ821	M.RESISTOR CH 1/10W 820	1	
R1160		ERJ6GEYJ152	M.RESISTOR CH 1/10W 1.5K	1	
R1161		ERJ6GEYJ123	M.RESISTOR CH 1/10W 12K	1	
R1162		ERJ6GEYJ103	M.RESISTOR CH 1/10W 10K	1	
R1163		ERJ6GEYJ102	M.RESISTOR CH 1/10W 1K	1	
RY1100		VSY1033	RELAY	1	
RY1101		VSQ0796		1	
T1020		VLT0709		1	

Ref.No.		Part No.	Part Name & Description	Pcs	Remarks
T1080		VLT0638	TRANSFORMER	1	
T1085		VLT0638	TRANSFORMER	1	
T1090		VLT0638	TRANSFORMER	1	
T1095		VLT0638	TRANSFORMER	1	
TP1001,02		VJR0646	TEST POINT	2	
			MISCELLANEOUS		
		VHN0011	NYLON NUT	2	
		VMC0357	SPRING	1	
		VMP3084	P.C.BOARD HOLDER ANGLE	1	
		VMX2276	SPACER	1	
		VMZ2095	BARRIER	1	
		VMZ2100	BARRIER	1	
		VMZ2175	BARRIER	1	
		VSC1068	HEAT SINK	1	
		VSC3820	HEAT SINK	1	
		VSC3821	HEAT SINK	1	
		XYN3+F10S	SCREW	5	
		XYN3+F6S	SCREW	1	
	■	VEP81068A	P.C.BOARD W/COMPONENT		
			POWER 2		
			CAPACITORS		
C1030		ECEA1HNX471	.CAPACITOR V	1	
C1031,32		ECQF6222KZ	P.CAPACITOR 630V 2200P	2	
C1040		ECEA1VNX102	.CAPACITOR V	1	
C1042		ECEA1VNX102	.CAPACITOR V	1	
C1043		ECQE1103KF	.CAPACITOR V	1	
C1050-53		ECEA1ENX102	.CAPACITOR V	4	
C1054		ECQP1471JZ	P.CAPACITOR 100V 470P	1	
C1060-63		ECA1CFZ222L	E.CAPACITOR 16V 2200U	4	
C1070		ECEA1AGE103	E.CAPACITOR 10V 10000U	1	
C1071		ECA1AFZ222	E.CAPACITOR 10V 2200U	1	
C1072		ECA1AFZ472	E.CAPACITOR 10V 4700U	1	
C1073		ECA1AFZ222	E.CAPACITOR 10V 2200U	1	
C1076		ECQP1102JZ	P.CAPACITOR 100V 1000P	1	
C1101,02		ECQE2155KF	.CAPACITOR V	2	
C1101S		VMZ2155	.CAPACITOR V	1	
C1102S		VMZ2155	.CAPACITOR V	1	
D1030		D8LC40	DIODE	1	
D1040		D8LCA20	DIODE	1	
D1050		D8LCA20	DIODE	1	
D1051		D8LCA20R	DIODE	1	
D1052		MA154WK	DIODE	1	
D1060		D10SC6M	DIODE	1	
D1061		D10SC6MR	DIODE	1	
D1070		D30SC4M	DIODE	1	
D1071		D10SC6MR	DIODE	1	
DZ1050		RD2.4ESB2		1	
DZ1060		RD2.4ESB2		1	

POWER 3 VEP81069A
AUTO OFF LED VEP80792A

Ref.No.		Part No.	Part Name & Description	Pcs	Remarks
JP5		VJP1145		1	
JP6		VJP2824A005		1	
L1030		VLQ0501	COIL	1	
L1040		VLT0310	TRANSFORMER	1	
L1042		ELC10B024	COIL H	1	
L1050		VLT0708	COIL H	1	
L1051,52		ELC10B025	COIL H	2	
L1062,63		ELC10B025	COIL H	2	
L1070		VLQ0488	COIL	1	
L1071		VLQ0298	COIL	1	
L1072		VLQ0486	COIL	1	
L1073		ELC10B025	COIL H	1	
Q1034		2SB642	TRANSISTOR	1	
Q1037		2SB642	TRANSISTOR	1	
Q1044		2SB642	TRANSISTOR	1	
Q1050		2SD1277A	TRANSISTOR	1	
Q1054		2SB642	TRANSISTOR	1	
Q1057		2SD637	TRANSISTOR	1	
Q1060		2SD1277A	TRANSISTOR	1	
Q1064		2SB642	TRANSISTOR	1	
Q1067		2SD637	TRANSISTOR	1	
Q1077		2SD637	TRANSISTOR	1	
			RESISTORS		
R1031,32		ERG2SJ220	M.RESISTOR 2W 22	2	
R1034		ERX2SZJR12	.RESISTOR W	1	
R1035,36		ERDS2TJ101	C.RESISTOR 1/4W 100	2	
R1037		ERX2SZJR12	.RESISTOR W	1	
R1038		ERDS2TJ101	C.RESISTOR 1/4W 100	1	
R1041		ERDS2TJ223	C.RESISTOR 1/4W 22K	1	
R1042		ERDS2TJ222	C.RESISTOR 1/4W 2.2K	1	
R1043		ERG3SJ221	M.RESISTOR 3W 220	1	
R1044		ERX3SZJR10	M.RESISTOR 3W 0.10	1	
R1045,46		ERDS2TJ101	C.RESISTOR 1/4W 100	2	
R1050		ERDS2TJ562	C.RESISTOR 1/4W 5.6K	1	
R1051		ERX2SJ4R7	M.RESISTOR 2W 4.7	1	
R1052		ERQ12HJ100	.RESISTOR W	1	
R1054		ERX3SZJR10	M.RESISTOR 3W 0.10	1	
R1055,56		ERDS2TJ101	C.RESISTOR 1/4W 100	2	
R1057		ERX3SZJR15	.RESISTOR W	1	
R1058,59		ERDS2TJ101	C.RESISTOR 1/4W 100	2	
R1060		ERDS2TJ272	C.RESISTOR 1/4W 2.7K	1	
R1061		ERX2SJ2R4	.RESISTOR W	1	
R1062		ERX2SJR47	.RESISTOR W	1	
R1064		ERX3SZJR10	M.RESISTOR 3W 0.10	1	
R1065,66		ERDS2TJ101	C.RESISTOR 1/4W 100	2	
R1067		ERX3SZJR15	.RESISTOR W	1	
R1068,69		ERDS2TJ101	C.RESISTOR 1/4W 100	2	
R1071		ERG1SJ470	M.RESISTOR 1W 47	1	
R1073		ERDS2TJ512	C.RESISTOR 1/4W 5.1K	1	
R1074		ERDS2TJ562	C.RESISTOR 1/4W 5.6K	1	
R1075		ERF5TLK39M	.RESISTOR W	1	
R1076		ERQ12HJ100	.RESISTOR W	1	
R1077		ERF5TLK68M	.RESISTOR W	1	
R1078,79		ERDS2TJ101	C.RESISTOR 1/4W 100	2	
T1002		VLT0710		1	
T1003		VLT0712		1	
T1004		VLT0711		1	
VR1040		VRV0064B501	V.RESISTOR 500	1	
VR1070		VRV0064B202	V.RESISTOR 2K	1	

Ref.No.		Part No.	Part Name & Description	Pcs	Remarks
			MISCELLANEOUS		
		VMP3083	P.C.BOARD HOLDER ANGLE	10	
		VMZ2104	BARRIER	1	
		VSC3822	HEAT SINK	1	
		XYN3+F6S	SCREW	13	
	■	VEP81069A	P.C.BOARD W/COMPONENT		
			POWER 3		
			CAPACITORS		
C1001,02		ECQU2A224MN	P.CAPACITOR 250V 0.22U	2	
C1003,04		ECKDNS222ME	.CAPACITOR V	2	
C1006,07		ECKDNS471MB	.CAPACITOR V	2	
CS1001,02		VMZ1798		2	
CS1003,04		VMZ0965		2	
CS1006,07		VMZ0965		2	
L1001		VLQ0499	COIL	1	
1002	V	LQ0500		1	
S1001	V	MZ1799		1	
S1002	V	MZ1810		1	
			RESISTORS		
R1001		ERC12AGM334	S.RESISTOR 1/2W 330K	1	
	■	VEP80792A	P.C.BOARD W/COMPONENT		
			AUTO OFF LED		
D1		LN38GP	DIODE	1	
D2		VLL0029	LED	1	
P1		VJP1602T	CONNECTOR (MALE) 9P	1	
P2		VJP1596T	CONNECTOR (MALE) 3P	1	
P3		VJP1598T	CONNECTOR (MALE) 5P	1	
			RESISTORS		

EJECT VEP80790A　　HP JACK VEP86131A　　FR VR VEP86132A
ERR LED VEP80804A　　HP VR VEP86130A　　FR CPU VEP86126B　　CPU SUB VEP86129A

Ref.No.		Part No.	Part Name & Description	Pcs	Remarks
R1,R2		ERDS2TJ221	C.RESISTOR 1/4W 220	2	
	■	VEP80790A	P.C.BOARD W/COMPONENT		
			EJECT		
P1		VJP1596T	CONNECTOR (MALE) 3P	1	
SW1		VSP0543		1	
	■	VEP80804A	P.C.BOARD W/COMPONENT		
			ERR LED		
D1		LN38GP	DIODE	1	
D2		LN48YP	DIODE	1	
D3,D4		LN28RP	DIODE	2	
P1		VJP1598T	CONNECTOR (MALE) 5P	1	
			RESISTORS		
R1-R4		ERDS2TJ221	C.RESISTOR 1/4W 220	4	
	■	VEP86131A	P.C.BOARD W/COMPONENT		
			HP JACK		
	■	VEP86130A	P.C.BOARD W/COMPONENT		FOR VEP86131A
			HP VR		
J1		VJJ0150	HEADPHONE JACK	1	
P1		VJP1232T	CONNECTOR (MALE) 5P	1	
	■	VEP86132A	P.C.BOARD W/COMPONENT		
			FR VR		

Ref.No.		Part No.	Part Name & Description	Pcs	Remarks
			CAPACITORS		
C1		ECKF1H103ZF	C.CAPACITOR 50V 0.01U	1	
C2		ECA1CXK101F	.CAPACITOR V	1	
C3		ECKF1H103ZF	C.CAPACITOR 50V 0.01U	1	
C4		ECA1CXK101F	.CAPACITOR V	1	
IC1-C3		NJM2904D	IC	3	
L1,L2		VLQEL05F101J	COIL 100UH	2	
P1		VJP3440A016	CONNECTOR	1	
VR1-R6		EVU023003B14	V.RESISTOR W	6	
	■	VEP86126B	P.C.BOARD W/COMPONENT		
			FR CPU		
	■	VEP86129A	P.C.BOARD W/COMPONENT		FOR VEP86126B
			CPU SUB		
B1		VSQ0558	BUZZER	1	
			CAPACITORS		
C1		ECA1HXS2R2	.CAPACITOR V	1	
C2		ECUM1H103ZFN	C.CAPACITOR CH 50V 0.01U	1	
C3,C4		ECUM1H220JCN	C.CAPACITOR CH 50V 22P	2	
C5		ECUM1H103ZFN	C.CAPACITOR CH 50V 0.01U	1	
C6		ECA1VXK470F	.CAPACITOR V	1	
C7		ECA1CXK101F	.CAPACITOR V	1	
C8		ECA1AXS680	E.CAPACITOR 10V 68U	1	
C9		ECA1CXK101F	.CAPACITOR V	1	
C10		ECA1CXS100	.CAPACITOR V	1	
C11		ECUM1E104KBN	C.CAPACITOR 25V 0.1U	1	
C12		ECUM1H103ZFN	C.CAPACITOR CH 50V 0.01U	1	
C13		ECA1CXS100	.CAPACITOR V	1	
C14-22		ECA1CXK101F	.CAPACITOR V	9	
C23,24		ECUM1E104KBN	C.CAPACITOR 25V 0.1U	2	
C25-30		ECUM1H103ZFN	C.CAPACITOR CH 50V 0.01U	6	
C31		ECUM1H102KBN	C.CAPACITOR CH 50V 1000P	1	
C32-36		ECUM1H103ZFN	C.CAPACITOR CH 50V 0.01U	5	
C37,38		ECA1CXK101F	.CAPACITOR V	2	
C39,40		ECUM1H103ZFN	C.CAPACITOR CH 50V 0.01U	2	
C41,42		ECUM1H121JCN	C.CAPACITOR CH 50V 120P	2	
C43		ECUM1H103ZFN	C.CAPACITOR CH 50V 0.01U	1	
C44		ECUM1E104KBN	C.CAPACITOR 25V 0.1U	1	
C45		ECUM1H121JCN	C.CAPACITOR CH 50V 120P	1	
D1-D3		MA151K	DIODE	3	

Ref.No.		Part No.	Part Name & Description	Pcs	Remarks
FL1-L4		VLF0576	FILTER	4	
IC1		HD64180ZP8	IC	1	
IC2		VSI1321	IC	1	
IC3		MN4464S08L	IC	1	
IC4		MB8421-90LPF	IC	1	
IC5		MB89363BPF	IC	1	
IC6		TL7705CPSB	IC	1	
IC7		MC74HC138AF	IC	1	
IC8		MC74HC139AF	IC	1	
IC9		MC74HC138AF	IC	1	
IC10		MC74HC32AF	IC	1	
IC11		MC74HC4050F	IC	1	
IC12		MC74HC32AF	IC	1	
IC13		MC74HC08AF	IC	1	
IC14		MC74HC04AF	IC	1	
IC15		UPD71054GB	IC	1	
IC16		AM26LS32M	IC	1	
IC17		AM26LS31M	IC	1	
IC18-20		MC74HC74AF	IC	3	
IC21,22		MC74HC4040F	IC	2	
IC23-25		MC74HC244AF	IC	3	
IC26		MC74HC165F	IC	1	
IC27		MC14094BF	IC	1	
IC28		MC74HC164F	IC	1	
IC29		MC74HC04AF	IC	1	
IC30		MC74HC02AF	IC	1	
IC31		MC74HC04AF	IC	1	
IC32		MC74HC11F	IC	1	
IC34,35		MC14516BF		2	
IC36		MC14015BF	IC	1	
IC37,38		MC74HC74AF	IC	2	
IC39-41		DG508ACWE	IC	3	
IC43,44		MC74HC161F	IC	2	
IC45		AK5326	IC	1	
IC46,47		MC74HC595AF	IC	2	
IC48		NJM78L05UA	IC	1	
IC49		NJM79L05UA	IC	1	
IC50		MC74HC04AF	IC	1	
IC51-54		NJM2904M	IC	4	
IC55		MC74HC27F	IC	1	
IC56,57		NJM78L05UA	IC	2	
IC58		MB89363BPF	IC	1	
IC59		MC14013BF	IC	1	
ICS1		VJS3111	CONNECTOR (FEMALE)	1	
ICS2		VJS2336A028	CONNECTOR (FEMALE)	1	
L1-L3		VLQEL05S101J	COIL 100UH	3	
L4-L9		VLQ0576	COIL	6	
L10-15		VLQ0576	COIL	6	
P1		VJP3418A032	CONNECTOR	1	
P2		VJS2698A028	CONNECTOR	1	
P3		VJP1232T	CONNECTOR (MALE) 5P	1	
P4		VJP1230T	CONNECTOR (MALE) 3P	1	
P5		VJS2698A028	CONNECTOR	1	
P6,P7		VJP3440A016	CONNECTOR	2	
P8		VJP1145		1	
PC1-C9		ECUM1H103ZFN	C.CAPACITOR CH 50V 0.01U	9	
PC10-39		ECUM1H103ZFN	C.CAPACITOR CH 50V 0.01U	30	
Q1		2SD601-R	TRANSISTOR CHIP	1	(R)
Q2		UN2212	TRANSISTOR-RESISTOR	1	

Ref.No.		Part No.	Part Name & Description	Pcs	Remarks
Q3-Q5		UN2214	TRANSISTOR-RESISTOR	3	
Q6		2SD946A	TRANSISTOR	1	
Q7-Q9		2SD601-R	TRANSISTOR CHIP	3	(R)
Q10		2SD601-R	TRANSISTOR CHIP	1	(R)
			RESISTORS		
R1-R9		ERJ6GEYJ104	M.RESISTOR CH 1/10W 100K	9	
R10-29		ERJ6GEYJ104	M.RESISTOR CH 1/10W 100K	20	
R30		ERJ6GEYJ562	M.RESISTOR CH 1/10W 5.6K	1	
R31		ERJ6GEYJ103	M.RESISTOR CH 1/10W 10K	1	
R32		ERJ6GEYJ562	M.RESISTOR CH 1/10W 5.6K	1	
R33		ERJ6GEYJ222	M.RESISTOR CH 1/10W 2.2K	1	
R34		ERJ6GEYJ474	M.RESISTOR CH 1/10W 470K	1	
R35-40		ERJ6GEYJ472	M.RESISTOR CH 1/10W 4.7K	6	
R41		ERJ6GEYJ331	M.RESISTOR CH 1/10W 330	1	
R42		ERJ6GEYJ681	M.RESISTOR CH 1/10W 680	1	
R43		ERJ6GEYJ331	M.RESISTOR CH 1/10W 330	1	
R44		ERJ6GEYJ681	M.RESISTOR CH 1/10W 680	1	
R45		ERJ6GEYJ331	M.RESISTOR CH 1/10W 330	1	
R46		ERJ6GEYJ681	M.RESISTOR CH 1/10W 680	1	
R47		ERJ6GEYJ331	M.RESISTOR CH 1/10W 330	1	
R48		ERJ6GEYJ681	M.RESISTOR CH 1/10W 680	1	
R49		ERJ6GEYJ331	M.RESISTOR CH 1/10W 330	1	
R50		ERJ6GEYJ681	M.RESISTOR CH 1/10W 680	1	
R51		ERJ6GEYJ331	M.RESISTOR CH 1/10W 330	1	
R52		ERJ6GEYJ681	M.RESISTOR CH 1/10W 680	1	
R53		ERJ6GEYJ331	M.RESISTOR CH 1/10W 330	1	
R54		ERJ6GEYJ681	M.RESISTOR CH 1/10W 680	1	
R55		ERJ6GEYJ331	M.RESISTOR CH 1/10W 330	1	
R56		ERJ6GEYJ681	M.RESISTOR CH 1/10W 680	1	
R57		ERJ6GEYJ122	M.RESISTOR CH 1/10W 1.2K	1	
R58		ERJ6GEYJ222	M.RESISTOR CH 1/10W 2.2K	1	
R59		ERJ6GEYJ223	M.RESISTOR CH 1/10W 22K	1	
R60		ERJ6GEYJ303	.RESISTOR W	1	
R61		ERJ6GEYJ105	M.RESISTOR CH 1/10W 1M	1	
R62		ERJ6GEYJ123	M.RESISTOR CH 1/10W 12K	1	
R63		ERJ6GEYJ473	M.RESISTOR CH 1/10W 47K	1	
R64-66		ERJ6GEYJ333	M.RESISTOR CH 1/10W 33K	3	
R67		ERJ6GEYJ104	M.RESISTOR CH 1/10W 100K	1	
R68		ERJ6GEYJ153	M.RESISTOR CH 1/10W 15K	1	
R69		ERJ6GEYJ103	M.RESISTOR CH 1/10W 10K	1	
R70		ERJ6GEYJ100	M.RESISTOR CH 1/10W 10	1	
R71		ERJ6GEYJ510	.RESISTOR W	1	
R72		ERJ6GEYJ471	M.RESISTOR CH 1/10W 470	1	
R73		ERJ6GEYJ331	M.RESISTOR CH 1/10W 330	1	
R75		ERJ6GEYJ331	M.RESISTOR CH 1/10W 330	1	
R77		ERJ6GEYJ331	M.RESISTOR CH 1/10W 330	1	
R79		ERJ6GEYJ331	M.RESISTOR CH 1/10W 330	1	
R89-99		ERJ6GEYJ103	M.RESISTOR CH 1/10W 10K	11	
R100-09		ERJ6GEYJ103	M.RESISTOR CH 1/10W 10K	10	
R110-12		ERJ6GEYJ562	M.RESISTOR CH 1/10W 5.6K	3	
R113,14		ERJ6GEYJ103	M.RESISTOR CH 1/10W 10K	2	
R115-20		ERJ6GEY0R00	M.RESISTOR CH 1/10W 0	6	
SW1		VSS0186	SWITCH	1	
SW2		VSS0187	SWITCH	1	
SW3,W4		VSS0186	SWITCH	2	
SW5-W7		VSP0482	SWITCH	3	
VR1		EVUE3AS01B53	V.RESISTOR W	1	
VR2		VRV0109B502	V.RESISTOR 5K	1	
VR3		EVUE3AS01B53	V.RESISTOR W	1	
VR4-R8		EVUESAEA6B53	V.RESISTOR W	5	
X1		VSX0150	CRYSTAL OSCILLATOR	1	

FR SW VEP86127A
FR LED VEP86128A

Ref.No.		Part No.	Part Name & Description	Pcs	Remarks
	■	VEP86127A	P.C.BOARD W/COMPONENT		
			FR SW		
	■	VEP86128A	P.C.BOARD W/COMPONENT		
			FR LED		
			CAPACITORS		
C2		ECQB1H332JF	.CAPACITOR V	1	
C3		ECUM1H1042FN	C.CAPACITOR CH 50V 0.1U	1	
C5		ECA1HXS100	.CAPACITOR V	1	
C6,C7		ECA1CXK101F	.CAPACITOR V	2	
C8		ECUM1H472KBN	C.CAPACITOR CH 50V 4700P	1	
C9		ECUM1H1042FN	C.CAPACITOR CH 50V 0.1U	1	
C10-20		ECUM1H1042FN	C.CAPACITOR CH 50V 0.1U	11	
D1,2		MA151WK	DIODE	2	
D6-D9		MA151WK	DIODE	4	
D10-16		MA151WK	DIODE	7	
D17,18		LN38GP	DIODE	2	
D19-22		LN48YP	DIODE	4	
D23		LN240CP	DIODE	1	
D24		LN340GCPGLS	DIODE	1	
D25		LN240CP	DIODE	1	
D26		LN340GCPGLS	DIODE	1	
D27		LN240CP	DIODE	1	
D28		LN340GCPGLS	DIODE	1	
D29		MA151K	DIODE	1	
D30		MA4091M	DIODE	1	
D31		MA4330M	DIODE	1	
D32		MA166	DIODE	1	
D40,41		LN38GP	DIODE	2	
D42		LN28RP	DIODE	1	
D50-D61		MA151K	DIODE	12	
IC1-C3		MC74HC574AF	IC	3	
IC4		TMP82C79F2	IC	1	
IC5,C6		MC74HC574AF	IC	2	
IC7,C8		MC74HC138AF	IC	2	
IC9		MC74HC04AF	IC	1	
IC10		TMP82C55AF2	IC	1	
IC11,12		AN6873N	IC	2	
IC13		VSL0081	DISPLAY TUBE	1	
L2		VLQ0197	COIL	1	
LH17-22		VMX1858		6	
LH40-42		VMX1858		3	
P1		VJS2582B028	CONNECTOR	1	
Q1-Q9		2SD601-R	TRANSISTOR CHIP	9	(R)
Q10-31		2SD601-R	TRANSISTOR CHIP	22	(R)
Q32		2SD973-S	TRANSISTOR	1	
Q33-35		2SD601-R	TRANSISTOR CHIP	3	(R)
Q40-42		2SD601-R	TRANSISTOR CHIP	3	(R)

Ref.No.		Part No.	Part Name & Description	Pcs	Remarks
			RESISTORS		
R1-R9		ERJ6GEYJ331	M.RESISTOR CH 1/10W 330	9	
R10-16		ERJ6GEYJ331	M.RESISTOR CH 1/10W 330	7	
R17-24		ERJ6GEYJ682	M.RESISTOR CH 1/10W 6.8K	8	
R25-32		ERJ6GEYJ222	M.RESISTOR CH 1/10W 2.2K	8	
R33-38		ERJ6GEYJ331	M.RESISTOR CH 1/10W 330	6	
R39-41		ERJ6GEYJ682	M.RESISTOR CH 1/10W 6.8K	3	
R42-44		ERJ6GEYJ222	M.RESISTOR CH 1/10W 2.2K	3	
R45-60		ERJ6GEYJ331	M.RESISTOR CH 1/10W 330	16	
R61-68		ERJ6GEYJ682	M.RESISTOR CH 1/10W 6.8K	8	
R69-76		ERJ6GEYJ222	M.RESISTOR CH 1/10W 2.2K	8	
R77-84		ERJ6GEYJ331	M.RESISTOR CH 1/10W 330	8	
R85-88		ERJ6GEYJ682	M.RESISTOR CH 1/10W 6.8K	4	
R89-92		ERJ6GEYJ222	M.RESISTOR CH 1/10W 2.2K	4	
R93-96		ERJ6GEYJ331	M.RESISTOR CH 1/10W 330	4	
R97-99		ERJ6GEYJ271	M.RESISTOR CH 1/10W 270	3	
R100-08		ERJ6GEYJ271	M.RESISTOR CH 1/10W 270	9	
R109-16		ERJ6GEYJ682	M.RESISTOR CH 1/10W 6.8K	8	
R117-24		ERJ6GEYJ222	M.RESISTOR CH 1/10W 2.2K	8	
R125		ERJ6GEYJ472	M.RESISTOR CH 1/10W 4.7K	1	
R126		ERJ6GEYJ104	M.RESISTOR CH 1/10W 100K	1	
R127		ERJ6GEYJ223	M.RESISTOR CH 1/10W 22K	1	
R128		ERJ6GEYJ470	M.RESISTOR CH 1/10W 47	1	
R129		ERJ6GEYJ102	M.RESISTOR CH 1/10W 1K	1	
R128		ERJ6GEYJ470	M.RESISTOR CH 1/10W 47	1	
R129		ERJ6GEYJ102	M.RESISTOR CH 1/10W 1K	1	
R130-35		ERJ6GEYJ331	M.RESISTOR CH 1/10W 330	6	
R136		ERJ6GEYJ222	M.RESISTOR CH 1/10W 2.2K	1	
R137		ERJ6GEYJ682	M.RESISTOR CH 1/10W 6.8K	1	
R138		ERJ6GEYJ222	M.RESISTOR CH 1/10W 2.2K	1	
R139		ERJ6GEYJ682	M.RESISTOR CH 1/10W 6.8K	1	
R140		ERJ6GEYJ222	M.RESISTOR CH 1/10W 2.2K	1	
R141		ERJ6GEYJ682	M.RESISTOR CH 1/10W 6.8K	1	
R150		ERJ6GEYJ222	M.RESISTOR CH 1/10W 2.2K	1	
R151		ERJ6GEYJ682	M.RESISTOR CH 1/10W 6.8K	1	
R152,53		ERJ6GEYJ331	M.RESISTOR CH 1/10W 330	2	
R154		ERJ6GEYJ222	M.RESISTOR CH 1/10W 2.2K	1	
R155		ERJ6GEYJ682	M.RESISTOR CH 1/10W 6.8K	1	
R156,57		ERJ6GEYJ331	M.RESISTOR CH 1/10W 330	2	
R158		ERJ6GEYJ222	M.RESISTOR CH 1/10W 2.2K	1	
R159		ERJ6GEYJ682	M.RESISTOR CH 1/10W 6.8K	1	
R160,61		ERJ6GEYJ331	M.RESISTOR CH 1/10W 330	2	
SW1		VSP0753605	SWITCH	1	
SW2		VSP0753607	SWITCH	1	
SW3		VSP0753609	SWITCH	1	
SW4		VSP0753611	SWITCH	1	
SW5		VSP0753606	SWITCH	1	
SW6		VSP0753608	SWITCH	1	
SW7		VSP0753610	SWITCH	1	
SW8		VSP0753612	SWITCH	1	
SW9		VSP0544	SWITCH	1	
SW10		VSP0753603	SWITCH	1	
SW11		VSP0753604	SWITCH	1	
SW12		VSP0599	SWITCH	1	
SW13		VSP0752601	SWITCH	1	
SW14		VSP0752602	SWITCH	1	
SW15		VSP0551	SWITCH	1	
SW16		VSP0549	SWITCH	1	
SW17		VSP0552	SWITCH	1	
SW18		VSP0545	SWITCH	1	
SW19		VSP0542	SWITCH	1	
SW20		VSP0546	SWITCH	1	
SW21		VSP0548	SWITCH	1	
SW22		VSP0547	SWITCH	1	
SW23		VSS0324	SWITCH	1	
SW24,25		VSS0321	SWITCH	2	
SW26		VSS0324	SWITCH	1	
SW27		VSS0321	SWITCH	1	
SW28-31		EVQQJ104K	SWITCH	4	

S EXTENSION VFK0882
M EXTENSION VFK0883

Ref.No.		Part No.	Part Name & Description	Pcs	Remarks
T1		VLTO275	TRANSFORMER	1	
			MISCELLANEOUS		
		VHNO059	NYLON NUT	5	
		VJFO516	HOLDER	2	
			CAPACITORS		
C2-C5		ECUM1H1042FN	C.CAPACITOR CH 50V 0.1U	4	
C7		ECUM1H1042FN	C.CAPACITOR CH 50V 0.1U	1	
D1-D9		HDSP4850S02	DIODE	9	
D10-12		HDSP4850S02	DIODE	3	
D13-22		LN48YP	DIODE	10	
D23-26		HLMP-2300	DIODE	4	
IC1		BA6256	IC	1	
IC2-C4		BA618	IC	3	
IC5		SN74HC238NS	IC	1	
P1		VJS2582B028	CONNECTOR	1	
Q1		UN2216	TRANSISTOR-RESISTOR	1	
			RESISTORS		
R1-R21		ERJ6GEYJ101	M.RESISTOR CH 1/10W 100	21	
			MISCELLANEOUS		
		VMX1223	SPACER	1	
		VFKO882	P.C.BOARD W/COMPONENT		
			S EXTENSION		
			MISCELLANEOUS		
		VJP3151	CONNECTOR (MALE)	2	
		VJRO646	PIN	165	
		VJS3151	CONNECTOR (FEMALE)	2	
		XNG26BFZ	NUT	8	
		XYN26+C12FZ	SCREW	8	

Ref.No.		Part No.	Part Name & Description	Pcs	Remarks
		VFKO883	P.C.BOARD W/COMPONENT		
			M EXTENSION		
			MISCELLANEOUS		
		VJP3151	CONNECTOR (MALE)	2	
		VJRO646	PIN	165	
		VJS3151	CONNECTOR (FEMALE)	2	
		VMP2602	P.C.BOARD HOLDER ANGLE	1	
		VMP2603	P.C.BOARD HOLDER ANGLE	1	
		XNG26BFZ	NUT	8	
		XYN26+C12FZ	SCREW	8	
		XYN3+F6FZS	SCREW	4	

MECHANICAL REPLACEMENT PARTS LIST
MECHANICAL COMPONENT ASSEMBLY (1)

Ref.No.	Part No.	Part Name & Description	Pcs	Remarks
1	VXA2271	UPPER FRANCE	2	
2	VXP0819	POST ROLLER	4	
3	VMS2800	LOWER FRANCE	2	
4	VMB1379	POST SPRING	2	
5	VED0201	A/C HEAD U	1	
5-1	VMX1441	ADJ. COLLAR	2	
5-2	VMB1843	ADJ. SPRING	2	
5-3	VXA5026	A/C HEAD MOUNT PLATE	1	
5-4	VMD1579	A/C HEAD BASE	1	
5-5	VBR0188	A/C HEAD	1	
5-6	VBR0189	MONITOR HEAD	1	
5-7	VHD0797	SCREW	1	
10	VMB2147	A/C HEAD SPRING	1	
11	VMA8463	TENSION P.C.B. BARCKET	1	
12	VMS3712	UPPER FRANCE	2	
13	VXA2272	LOWER FRANCE	2	
14	VXP1422	LOADING RING UNIT	1	
14-1	VMS3638	P7 UPPER FRANCE	3	
14-2	VXP0821	POST ROLLER	3	
14-3	VMS2803	P7 LOWER FRANCE	3	
14-4	VMB1377	P8 POST SPRING	4	
14-5	VXL2106	PINCH ROLLER ARM U	1	
14-6	VMB2301	PINCH ARM REST SPRING	1	
14-7	VMS4617	P8 UPPER FRANCE	1	
14-8	VXP1294	P8 ROLLER	1	
14-9	VMS4620	P8 LOWER FRANCE	1	
14-10	VXL2105	M LOADING ARM UNIT	1	
14-11	VMB2299	LOADING ARM RESET SPRING	1	
14-12	VXP1421	LOADING RING	1	
14-13	VXL2317	T. BUFFER ARM U	1	
14-14	VMB2607	T. BUFFER SPRING	1	
14-15	VHD0789	SCREW	4	
15	VMB2341	POST SPRING	2	
16	VDP1010	RING ROLLER	4	
17	VMX1297	RING ROLLER COLLAR	2	
18	VXR0215	RING ROLLER UNIT	1	
18-1	VDP1010	RING ROLLER	2	
18-2	VMX1995	RING ROLLER COLLAR B	1	
18-3	VXA4483	RING ROLLER (1) U	1	
19	VMD1730	CABLE HOLDER	2	
20	VXA4406	WORM BASE (1) U	1	
20-1	VMA8377	WORM BASE	1	
20-2	VEM0397	WORM MOTOR U	1	
20-3	VDV0231	TIMING BELT	1	
23	VXP0940	CAPSTAN MOTOR UNIT	1	
24	VSC2066	CAPSTAN MOTOR COVER	1	
25	VXD0110	CAPSTAN HOUSING UNIT	1	
26	VEK3699	CAPSTAN STATOR P.C.B. U	1	
27	VEG1056	DRUM UNIT	1	
27-1	VXS0016	BRUSH UNIT	1	
27-2	VEH0615	CENTER DRUM U	1	
27-3	VXS0017	EARTH RING U	1	
27-5	VMD1760	MOTOR COVER	1	
27-6	VMD1755	INTERLOCKING BLOCK	1	
27-7	VMD1758	INTERLOCKING ARM	1	
27-8	VMA8452	STEPPING PLATE (1)	2	
27-9	VEK2372	DEW SENSOR U	1	
27-10	VAG0273	TAPE GUIDE	1	
27-11	VJR3	CLAMPER	2	
28	VXA4417	CLEANER UNIT	1	
28-1	VSJ0096	CLEANER SOLENOID	1	
28-2	VXP1326	CLEANER ROLLER UNIT	1	
29	VHD0798	SCREW	4	
51	XNG4ES	NUT	1	
52	XYN26+C8	SCREW	2	
53	XTV26+6F	SCREW	4	
54	XTV3+6F	SCREW	20	
55	XTV3+6FFZ	SCREW	1	
56	XTV3+8F	SCREW	6	
57	XYN2+C10S	SCREW	3	
58	XYN2+C6V	SCREW	3	

Ref.No.	Part No.	Part Name & Description	Pcs	Remarks
59	XYN26+C7V	SCREW	3	
60	XVE26B6FP	SCREW	2	
61	XYN3+F18	SCREW	2	
62	XYN3+F6	SCREW	4	
63	XYNV26+K4S	SCREW	2	
64	XYNV3+K10S	SCREW	3	
65	XYN4+C10S	SCREW	3	
66	XWA26B	SPRING WASHER	2	
67	XUC25FP	E-RING	4	
68	XUC3FP	E-RING	3	
69	XWE4	WASHER	3	
70	XWG26	WASHER	4	
71	XWE4	WASHER	1	
72	XWGV3D6G	WASHER	4	
73	XWGV3Y6G	WASHER	2	
74	XWGV4D7G	WASHER	4	
75	XWGV4F9G	WASHER	1	
76	XWGV4Y7G	WASHER	4	
77	XYN2+C3	SCREW	1	
78	XYN2+J10	SCREW	2	
79	XYN26+C4	SCREW	4	
80	XYN26+C6	SCREW	1	
81	XYN3+A10BWS	SCREW	2	
82	XYN3+F14	SCREW	2	
83	XYN3+J5	SCREW	2	
84	XYN3+J8	SCREW	2	
85	XVE3A14FP	SCREW	2	
86	XVE3A6FP	SCREW	1	
87	XWE3	WASHER	4	
88	XVE26B12FP	HEX SCREW	2	
89	XXE3A8FP	SCREW	1	
90	XVE26B6FP	HEX SCREW	2	
91	XXE3A8FP	HEX SCREW	3	

MECHANICAL COMPONENT ASSEMBLY (1)

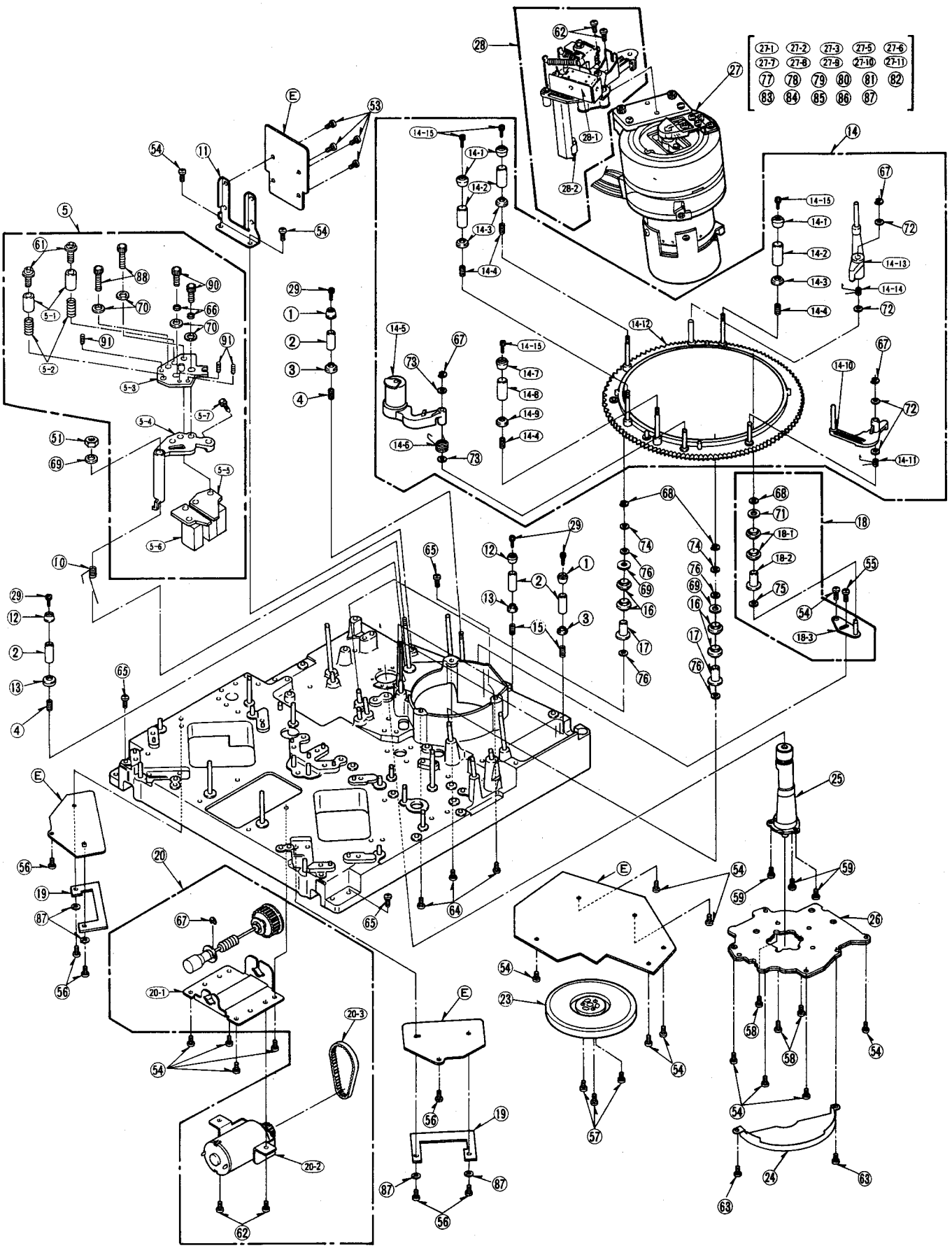

MECHANICAL COMPONENT ASSEMBLY (2)

Ref.No.		Part No.	Part Name & Description	Pcs	Remarks
1		VEK5416	S.BRAKE SOLENOID U.	1	
1-1		VSJ0100	BRAKE SOLENOID	1	<R23>
1-2		VMA8410	S SOLENOID BRACKET	1	
3		VMX2006	WASHER	2	
4		VXR0216	REEL TABLE	2	<R10,R11>
5		VXL2116	SUPPLY BRAKE U.	1	
5-1		VMB2308	BRAKE SPRING (2)	2	
5-2		VXL2119	BRAKE SHOE U.	2	<R21,R22>
5-3		VXL2118	S BRAKE ARM (2) U.	1	
5-4		VMB2300	BRAKE SPRING (1)	2	
5-5		VXL2117	S BRAKE ARM (1) UNIT	1	
10		VMA8416	S BRAKE INTERLOCKING ANGLE	1	
11		VMX0803	CASSETTE SUPPORTER	2	
12		VMB1377	P8 POST SPRING	2	
13		VBK0058	MR SENSOR	2	
14		VMA8415	MR SPACER	2	
15		VXA4409	S REEL BASE (1) U.	1	
16		VMD1707	DET BIT CAP (T)	2	
17		VXJ0096	DET BIT PIN U.	5	
18		VMB2280	DET BIT SPRING	5	
19		VMD1705	DET BIT HOLDER (T)	2	
20		VJF0620	CLAMPER	2	
21		VMA8375	PHOTO DET BASE	1	
22		VXL2120	TAKE UP BRAKE U.	1	
22-1		VMB2308	BRAKE SPRING	2	
22-2		VXL2119	BRAKE SHOE U.	1	
22-3		VXL2098	T BRAKE ARM (2) U.	1	
22-4		VMB2300	BRAKE SPRING	1	
22-5		VXL2121	T BRAKE ARM (1) U.	1	
24		VMA8417	T BRAKE INTERLOCKING ANGLE	1	
25		VEK5417	T.BRAKE SOLENOID U.	1	
25-1		VSJ0100	BRAKE SOLENOID	1	<R24>
25-2		VMA8409	T SOLENOID BRACKET	1	
26		VXA4412	T REEL BASE (1) U.	1	
27		VMS4633	RAIL B	2	
28		VMS4632	RAIL A	2	
29		VMA8449	RAIL HOLDER A	4	
30		VMA8450	RAIL HOLDER B	4	
31		VMZ1770	INSULATION SHEET	2	
32		VMD1786	CABLE HOLDER	2	
33		VMB2311	LC STOPPER SPRING (R)	1	
34		VXA4414	LC STOPPER (R) UNIT	1	
35		VMS3983	SELECT GUIDE SHAFT	2	
36		VMA8420	LC STOPPER HOLDER	2	
37		VXA4416	LC STOPPER (L) U.	1	
38		VMB2312	LC STOPPER SPRING (L)	1	
39		VXL2099	LC STOPPER DRIVE LEVER	1	
40		VXA4390	LC STOPPER BASE	1	
41		VMA8419	SOLENOID HOLDER	1	
42		VSJ0102	LC STOPPER SOLENOID	1	<R36>
43		VDG0757	REEL BASE DRIVE GEAR	2	
44		VMB2310	CHARGE SPRING	2	
45		VDG0756	REEL BASE DRIVE WHEEL GEAR	2	
46		VMD1707	DET BIT CAP (R)	1	
47		VMD1705	DET BIT HOLDER	1	
48		VMD1703	DETECTION BIT BASE	1	
49		VMD1704	LIGHT HOUSE CAP		
71		XQN2+AJ5	SCREW	6	
72		XTV26+5F	SCREW	8	
73		XTV26+8G	SCREW	4	
74		XTV3+6F	SCREW	15	
75		XTV3+8F	SCREW	5	
76		XYN2+C4	SCREW	4	
77		XYN26+F4FZ	SCREW	2	
78		XYN3+C4	SCREW	2	
79		XYNV26+K10	SCREW	4	
80		XYNV26+K5	SCREW	10	
81		XXEV3W4FPS	HEX SCREW	2	
82		XUC25FP	E-RING	8	
83		XUC2FP	E-RING	4	
84		XWG4	WASHER	2	

Ref.No.		Part No.	Part Name & Description	Pcs	Remarks
85		XWGV3D6G	WASHER	6	
86		XWGV3Y6G	WASHER	2	
87		XWGV3Y8G	WASHER	4	
88		XWGV4D9G	WASHER	4	
89		XYN3+C6S	SCREW	4	
90		XYN26+C5	SCREW	8	

MECHANICAL COMPONENT ASSEMBLY (2)

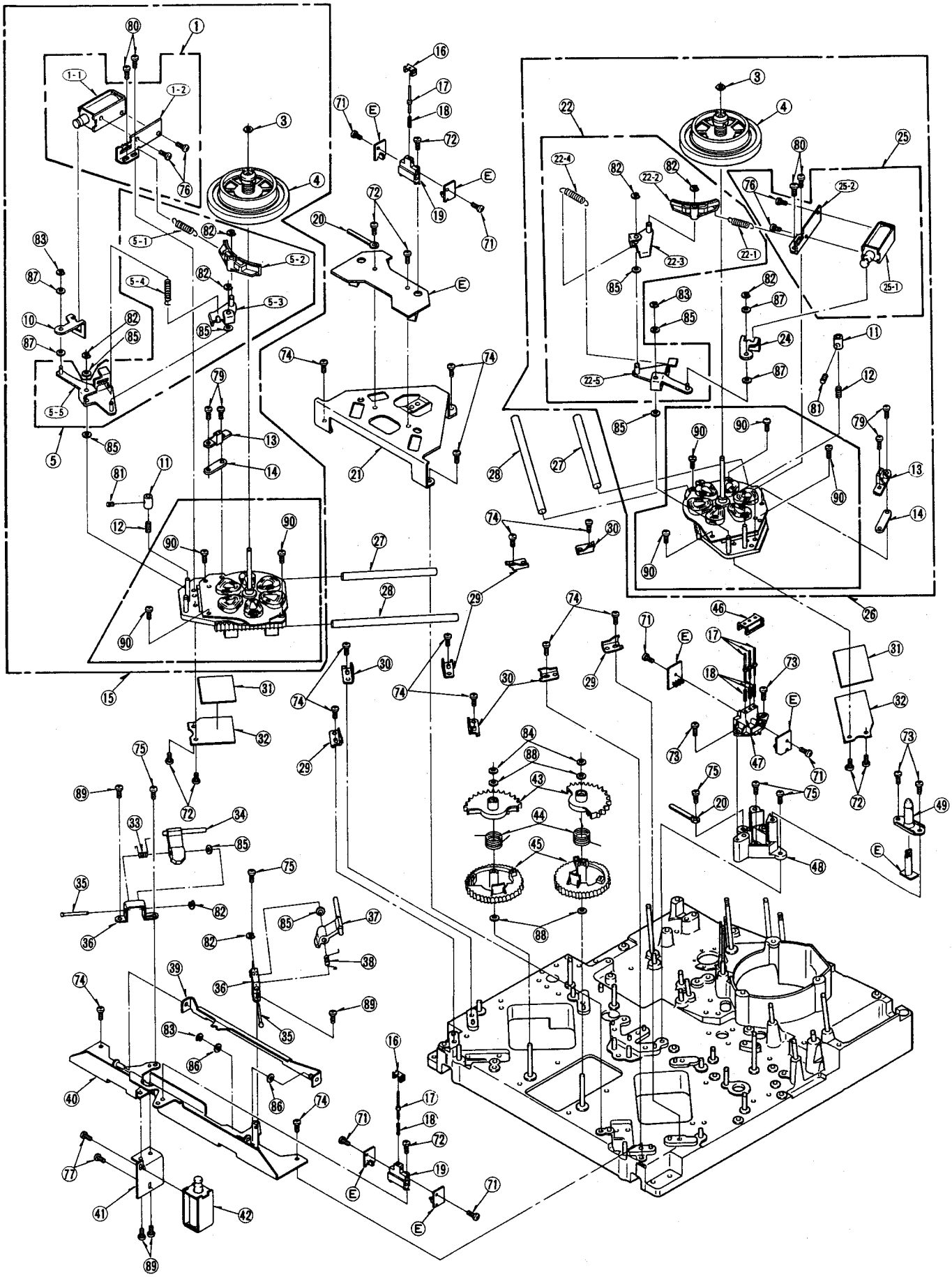

MECHANICAL COMPONENT ASSEMBLY (3)

Ref.No.		Part No.	Part Name & Description	Pcs	Remarks
1		VSJ0101	PINCH SOLENOID	1	
2		VMA8378	PINCH SOLENOID BASE	1	
3		VMA8464	PINCH LEVER ADJ. PLATE	1	
4		VXL2100	PINCH PRESS LEVER U	1	
4-1		VML1674	PINCH DRIVE ARM	1	
4-2		VMB2295	PINCH LEVEL RESET SPRING	1	
4-3		VMB1760	PINCH SPRING	1	
4-4		VMX0800	PINCH COLLAR (3)	1	
4-5		VML1675	PINCH LEVER	1	
4-6		VMX0799	PINCH COLLAR (2)	1	
5		VXA4401	MAIN LEVER U	1	
6		VMA8446	SUB LOADING BRACKET	1	
7		VMA8447	SUB UNLOADING SENSOR ANGLE	1	
8		VMX1994	PINCH SPACER	1	
9		VML2534	LOADING DETECT LEVER	1	
10		VMB2303	LOADING RESET SPRING	1	
11		VMA8448	LOADING DETECT BRACKET	1	
12		VXL2320	S TENSION ARM U	1	
12-1		VMB1378	P1 POST SPRING	1	
12-2		VXA4484	P3 UPPER FRANGE	1	
12-3		VXP0821	POST ROLLER	1	
12-4		VMS4619	P3 LOWER FRANGE	1	
12-5		VMB1376	P7 POST SPRING	1	
12-6		VMX0794	BEARING COVER	2	
12-7		VDB0779	BEARING	2	
12-10		VXL2111	P3 ARM U	1	
12-11		VXL2113	ADJUST ARM U	1	
12-12		VXL2112	P3 ARM (1) U	1	
12-13		VXA2310	MAGNET U	1	
12-14		VMS3662	P3 ARM SHAFT	1	
12-20		VXA4394	TENSION HOUSING U	1	
12-21		VMA8407	TENSION ADJ. PLATE	1	
12-22		VMC0732	LEAF SPRING	1	
12-23		VMA8181	PLATE NUT	1	
12-24		VXA4396	TENSION BASE U	1	
12-25		VMB2306	P3 CHARGE SPRING	1	
12-26		VXL2114	P3 DRIVE ARM U	1	
12-27		VMB2293	P3 ARM RESET SPRING	1	
12-28		VMX1981	P3 COLLAR	1	
12-29		VDB1120	TENSION HOUSING	1	
12-30		VXA4395	TENSION ADJ. PLATE U	1	
13		VML2532	UNLOADING DETECT LEVER	1	
14		VMB2296	UNLOADING DETECT SPRING	1	
15		VMA8465	UNLOADING DETECT BRACKET	1	
16		VEK3724	MAGNET	1	
17		VMA8444	SESOR BRACKET	1	
18		VMS3638	P7 UPPER FRANGE	2	
19		VMX1939	COLLAR A	4	
20		VXP1293	P1 ROLLER	2	
21		VMS2803	P7 LOWER FRNAGE	2	
22		VMB1376	P7 POST SPRING	2	
23		VHD0275	SCREW	4	
24		VES0625	POSITION DETECT BIT U	2	
25		VXA4400	T BASE (1) U	1	
26		VMA8429	SLANT ADJ. PLATE	1	
27		VMA8428	SLANT ADJ. BASE	1	
28		VHD0798	SCREW	2	
29		VXA4745	S BASE (1) U	1	
30		VBS0024	FULL ERASE HEAD	1	
31		VXL2115	T DRAW-OUT ARM U	1	
31-1		VXA4397	SLANT POST U	1	
31-2		VML2524	T DRAW-OUT ARM (1) U	1	
31-3		VMB2304	SLANT RESET SPRING	1	
32		VMB2302	CHARGE SPRING	1	
33		VXA4398	T DRAW-OUT ARM (1) U	1	
33-1		VMB2307	T ARM RESET SPRING	1	
34		VMX1953	P2 COLLAR	2	
35		VXL2108	P2 ARM U	1	
35-1		VMS4618	P2 UPPER FRANGE	1	
35-2		VXP0821	POST ROLLER	1	
35-3		VMS2803	P7 LOWER FRANGE	1	
35-4		VMB1376	P7 POST SPRING	1	
35-5		VXL2109	P2 ARM (1) U	1	
36		VMB2297	CHARGE SPRING	1	

Ref.No.		Part No.	Part Name & Description	Pcs	Remarks
37		VXA4393	P2 DRAW-OUT DRIVE PLATE U	1	
37-1		VMB2294	P2 ARM RESET SPRING	1	
38		VMC0217	WASHER	1	
39		VDP1071	ROLLER	3	
50		XYNV26+K5	SCREW	1	
51		XXEV26W3FP	SCREW	1	
52		XXE2D25FP	SCREW	1	
53		XXE2D2FP	SCREW	1	
54		XXE2D3FP	SCREW	1	
55		XQN2+A3FZ	SCREW	2	
56		XQN2+AJ5	SCREW	4	
57		XSN2+6	SCREW	2	
58		XTV3+8FFZ	SCREW	3	
59		XYN3+K10S	SCREW	3	
60		XTV26+5F	SCREW	8	
61		XYN3+F8FZS	SCREW	2	
62		XTV3+6F	SCREW	2	
63		XTV3+6FFZ	SCREW	10	
64		XTV3+8F	SCREW	4	
65		XYN2+C4	SCREW	3	
66		XYN2+C5	SCREW	3	
67		XYN3+F5FZ	SCREW	1	
68		XXE26A4FP	HEX SCREW	1	
69		XSB3+4FZ	SCREW	1	
70		XXE26D10FP	SCREW	1	
71		XYN3+C5S	SCREW	2	
72		XUC25FP	E-RING	6	
73		XWGV3D6G	WASHER	2	
74		XWGV3D8G	WASHER	6	
75		XWGV4F7G	WASHER	5	
76		XWGV3F6G	WASHER	2	
77		XUC3FP	E-RING	4	
78		XWGV4D7G	WASHER	3	
79		XWGV5D9G	WASHER	1	
80		XWG4	WASHER	1	
81		XWG3	WASHER	1	
82		XWGV4Y7G	WASHER	1	
83		XUC8FP	E-RING	1	
84		XWGV10Y15G	WASHER	2	
85		XWGV11D16G	WASHER	1	
86		XXE26A8FP	HEX WASHER	1	
87		XUC2FP	E-RING	1	

MECHANICAL COMPONENT ASSEMBLY (3)

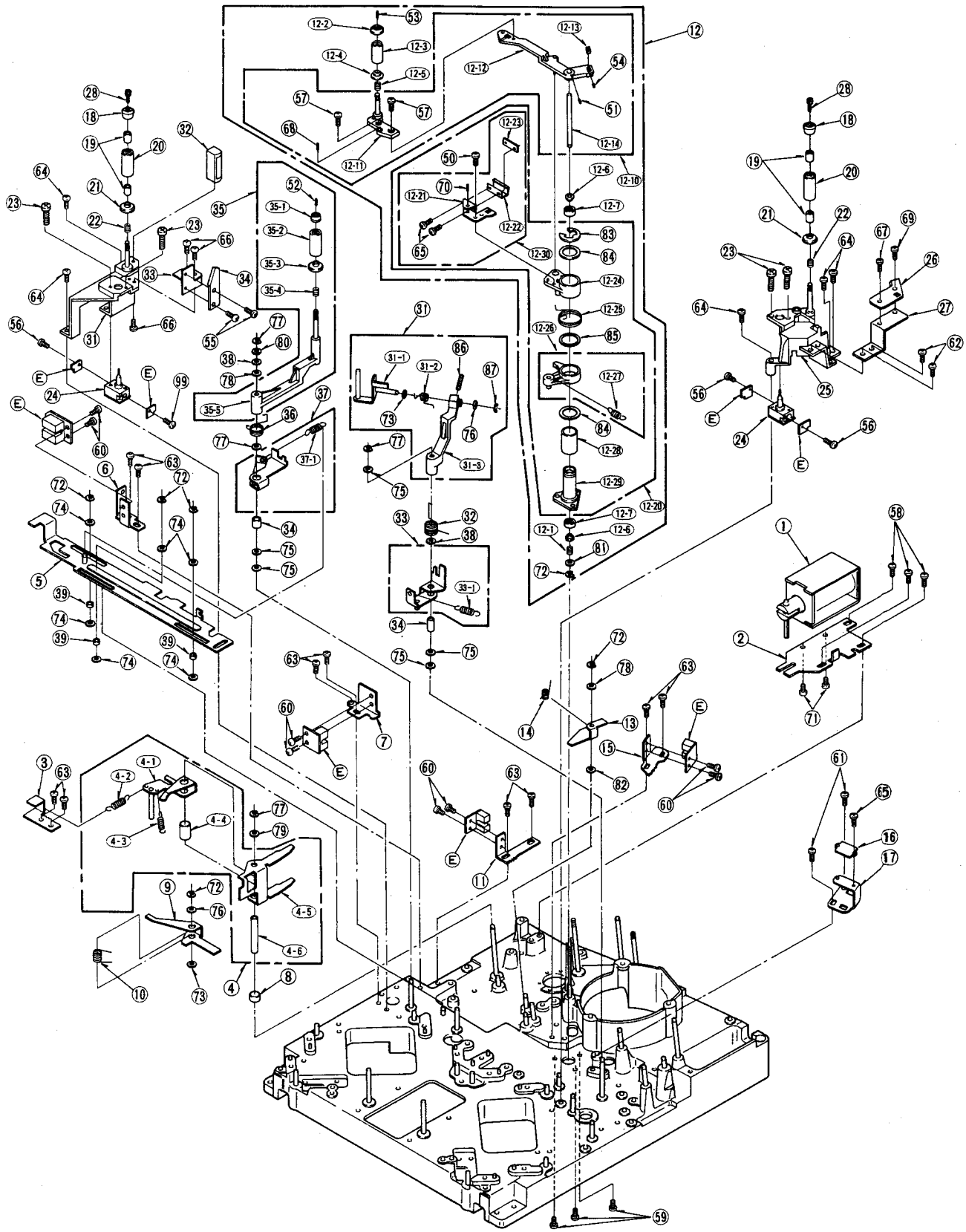

MECHANICAL COMPONENT ASSEMBLY (4)

Ref.No.		Part No.	Part Name & Description	Pcs	Remarks
1		VXA5027	A/C CLEANER 3P U	1	
1-1		VXA5028	A/C CLEANER BASE U	1	
1-2		VXL2314	CLEANER DRIVE LEVER U	1	
1-3		VXL2315	CLEANER ARM 1U	1	
1-4		VDG0888	CLEANER DRIVE CAM GEAR	1	
1-5		VDG0916	CONNECTION GEAR 1	1	
1-6		VDG0917	CONNECTION GEAR 2	1	
1-7		VXL2321	A/C CLEANER ARM U	1	
1-8		VMX2198	CLEANER CAP	3	
1-9		VMB2609	A/C CLEANER SPRING	1	
1-10		VMF0367	CLEANER PAD	2	
1-11		VMX1981	P3 DRIVE ROLLER	1	
1-12		VEK5905	LOADING SENSOR U	1	
1-13		VML2785	LOADING SENSOR LEVER	1	
1-14		VMB2610	LOADING SENSOR RETURN	1	
2		VEK6431	PG SENSOR BASE U	1	
2-1		VMA8906	PG SENSOR BASE	1	
3		VDG0216	INTERMEDIATE GEAR	1	
4		VDG0215	RING DRIVE GEAR	1	
5		VMX1405	DRIVE GEAR SLEEVE A	1	
6		VMB1343	DRIVE GEAR SPRING	1	
7		VXA4402	LOADING MOTOR HOLDER	1	
8		VEM0323	LOADING MOTOR U	1	
9		VDB0371	THRUST BEARING	1	
10		VXP1419	WARM GEAR U	1	
11		VDB0899	BEARING	1	
12		VDV0156	LOADING MOTOR BELT	1	
13		VMA8379	LOADING MOTOR BRACKET	1	
14		VMD1729	PINCH GUIDE	1	
15		VMA8426	PINCH GUIDE BRACKET A	1	
16		VMA8413	PINCH GUIDE BRACKET B	1	
17		VML2518	DRIVE ANGLE	1	
18		VMB2298	SLANT CHANGE SPRING	1	
19		VXA4405	DRIVE PLATE U	1	
20		VDG0761	INTERMEDIATE GEAR	1	
21		VDG0760	CAM GEAR	1	
22		VXA4404	SLANT DRIVE ANGLE	1	
23		VMX1979	SLANT DRIVE COLLAR	1	
24		VXP1289	DRIVE GEAR U	1	
25		VDG0828	DECREASE GEAR	1	
26		VMA8374	M PHOTO SENSOR ANGLE	1	
27		VEM0454	SUB LOADING MOTOR U	1	
27-1		VXP1420	SUB WARM GEAR U	1	
27-2		VMA8907	SUB LOADING MOTOR BRACKET	1	
27-3		VEM0395	SUB LOADING MOTOR U	1	
28		VJR3	CLAMPER	1	
50		XTV3+6F	SCREW	16	
51		XTV3+6FFZ	SCREW	1	
52		XTV26+6F	SCREW	2	
53		XTV26+4F	SCREW	2	
54		XYN2+C4	SCREW	2	
55		XTV26+5F	SCREW	2	
56		XTV3+8F	SCREW	3	
57		XSB3+6S	SCREW	2	
58		XYN3+C4S	SCREW	2	
59		XUC25FP	E-RING	7	
60		XUC2FP	E-RING	3	
61		XWGV3D6G	WASHER	12	
62		XWGV3F6G	WASHER	1	
63		XWGV3Y6G	WASHER	2	
64		XUC3FP	E-RING	4	
65		XWGV4D7G	WASHER	6	
66		XWG4FC	WASHER	1	
67		XWE4	WASHER	1	
68		XWGV4Y7G	WASHER	1	

Ref.No.		Part No.	Part Name & Description	Pcs	Remarks

MECHANICAL COMPONENT ASSEMBLY (4)

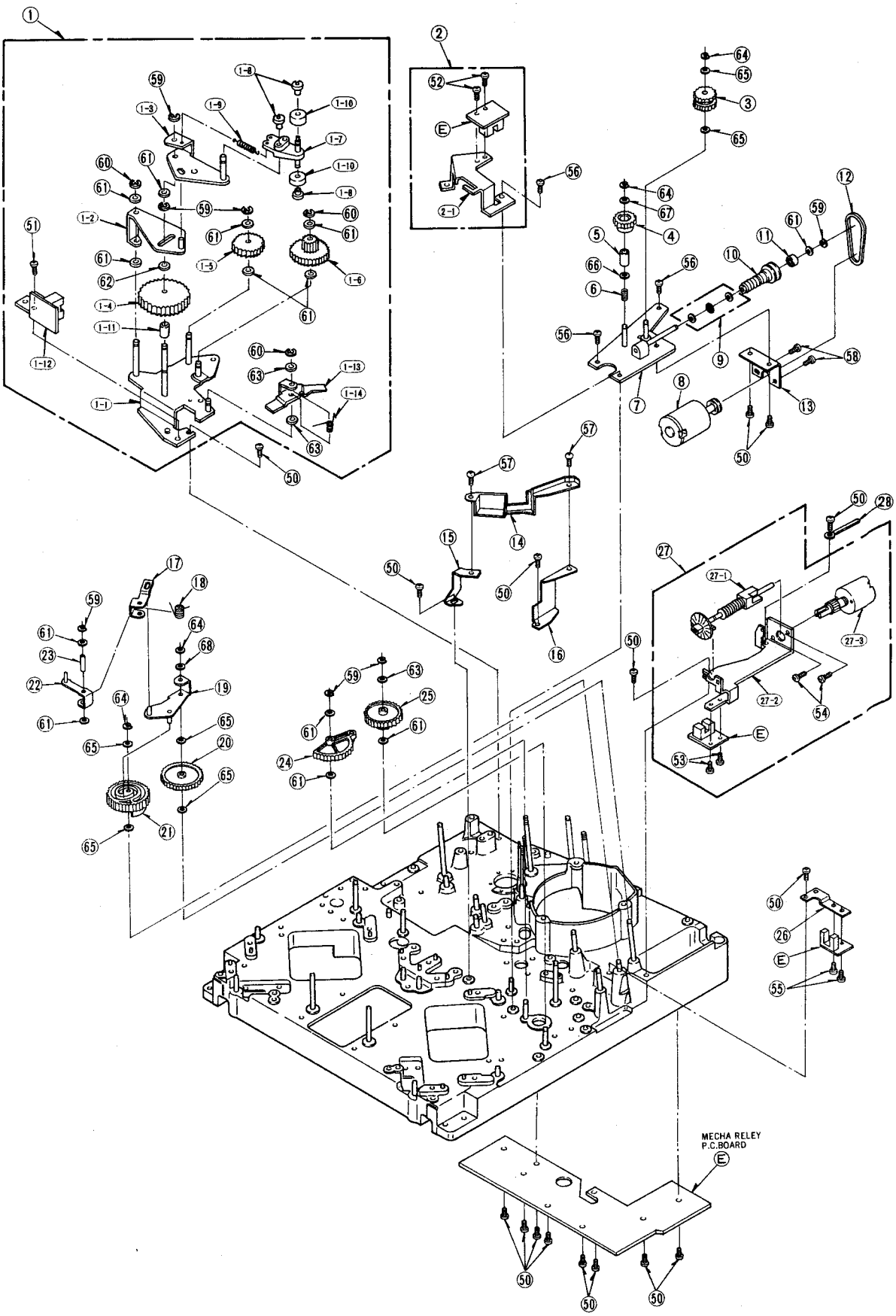

CASING PARTS ASSEMBLY

Ref.No.		Part No.	Part Name & Description	Pcs	Remarks
1		VYP3548	TOP PANEL U (1)	1	
1-1		VHD0775	SCREW	2	
1-2		VMX0835	SPACER	2	
2		VYP5313	TOP PANEL U (2)	1	
2-1		VHD0775	SCREW	2	
2-2		VMX0835	SPACER	2	
3		VGM0985	SIDE PANEL	2	
4		VJF1053	GARD EDGE SPACER	1	
5		VMP4083	TOP COVER ANGLE (A)	1	
6		VMP4082	TOP COVER ANGEL (B)	1	
7		VMP3962	P.C.B HOLDER	1	
8		VMP3957	RACK BRACKET	2	
9		VYH0145	HUNDLE	2	
9-1		VKH0215	HUNDLE ARM	2	
9-2		VJF0649	CLIP	2	
9-3		VMP2595	BASE ANGLE	2	
9-4		VMX1532	HUNDLE SPACER	2	
9-5		VMG0470	SPACER	2	
10		VGM0984	BOTTOM PLATE (1)	1	
11		VGM1006	BOTTOM PLATE (2)	1	
12		VMX1558	WASHER	4	
13		VMP3967	TOP PANEL ANGLE	2	
50		XSB4+8FC	SCREW	8	
51		XTV4+6F	SCREW	24	
52		XTV3+8F	SCREW	8	
53		XTV3+6F	SCREW	11	

CASING PARTS ASSEMBLY

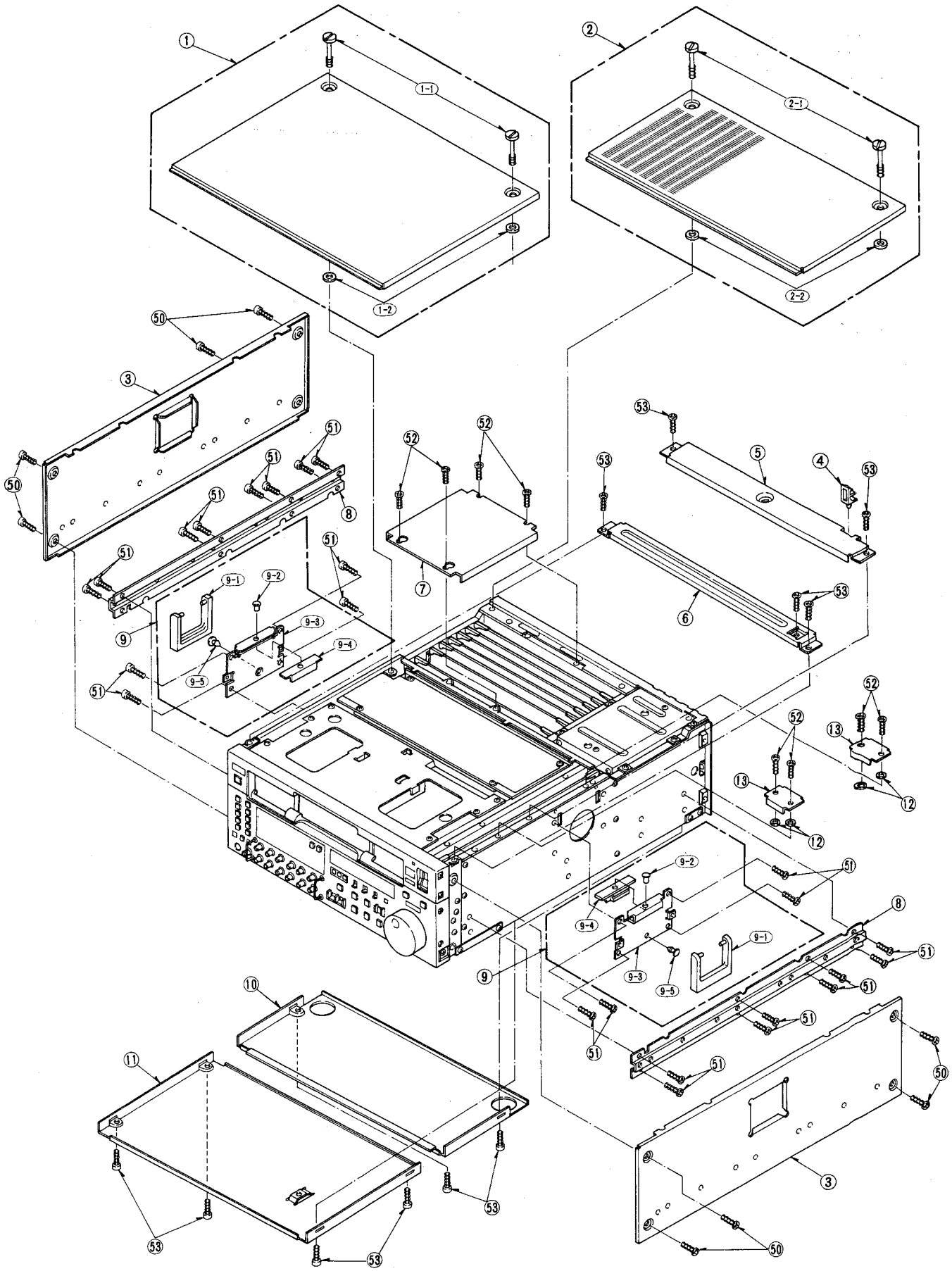

FRONT PANEL ASSEMBLY

Ref.No.		Part No.	Part Name & Description	Pcs	Remarks
1		VYP5224	FROTN PANEL U	1	
1-1		VMP4047	FRONT PANEL ANGLE	1	
1-2		VSW0047	POWER SW	1	
1-3		VMP4046	SW ANGLE	1	
2		VYP5226	FRONT PANEL U	1	
2-1		VYQ0834	ROTARY BRACKET (L)	1	
2-2		VMP3002	ANGLE	2	
2-3		VGU5334	HPVR KNOB	1	
2-4		VXU0768	VR KNOB U	6	
2-5		VXU1160	REC VR KNOB	6	
2-6		VGQ3176	PUSH BUTTON	4	
2-7		VGU5780	SEARCH DIAL	1	
2-8		VXU1087	SEARCH DIAL BUSHING	1	
2-9		VSR0095	SEARCH DIAL	1	
2-10		VYQ0833	ROTARY BRACKET (R)	1	
2-11		VGM1002	CONTROL PANEL	1	
2-12		VMB2597	BOTTON SPRING	4	
2-13		VGU3894	BUSHING BOTTON	4	
2-14		VGU5287	SLIDE KNOB	5	
2-15		VGP0498	SLIDE KNOB SHEET	5	
2-16		VMP4050	SPESSURE ANGLE A	1	
2-17		VMP4051	SPESSURE ANGLE B	1	
2-18		VGU3495	SLIDE SW	4	
2-19		VMZ2132	CPU BARRIER	1	
2-20		VKU0384	FRONT COVER	1	
2-21		VKP2023	CONTROL PANEL DOOR (SUB)	1	
2-22		VGQ3212	DOOR MAGNET	1	
2-23		VMX1968	WASHER	4	
2-24		VWJ28C2060LL	CABLE	2	
3		VHD0277	SCREW	3	
50		XTV3+8J	SCREW	18	
51		XTN3+6J	SCREW	1	
52		XSB3+10FCW	SCREW	8	
53		XTV4+12J	SCREW	3	
54		XYN3+C6S	SCREW	2	
55		XTV4+12J	SCREW	10	
56		XTN4+14G	SCREW	8	
57		XTB4+8J	SCREW	3	
58		XSN3+6	SCREW	2	
59		XTV4+12J	SCREW	4	
60		XSB3+8FZ	SCREW	1	
61		XNG3C5	NUT	4	
62		XWA3B	SPRING WASHER	4	
63		XWG3	WASHER	4	

FRONT PANEL ASSEMBLY

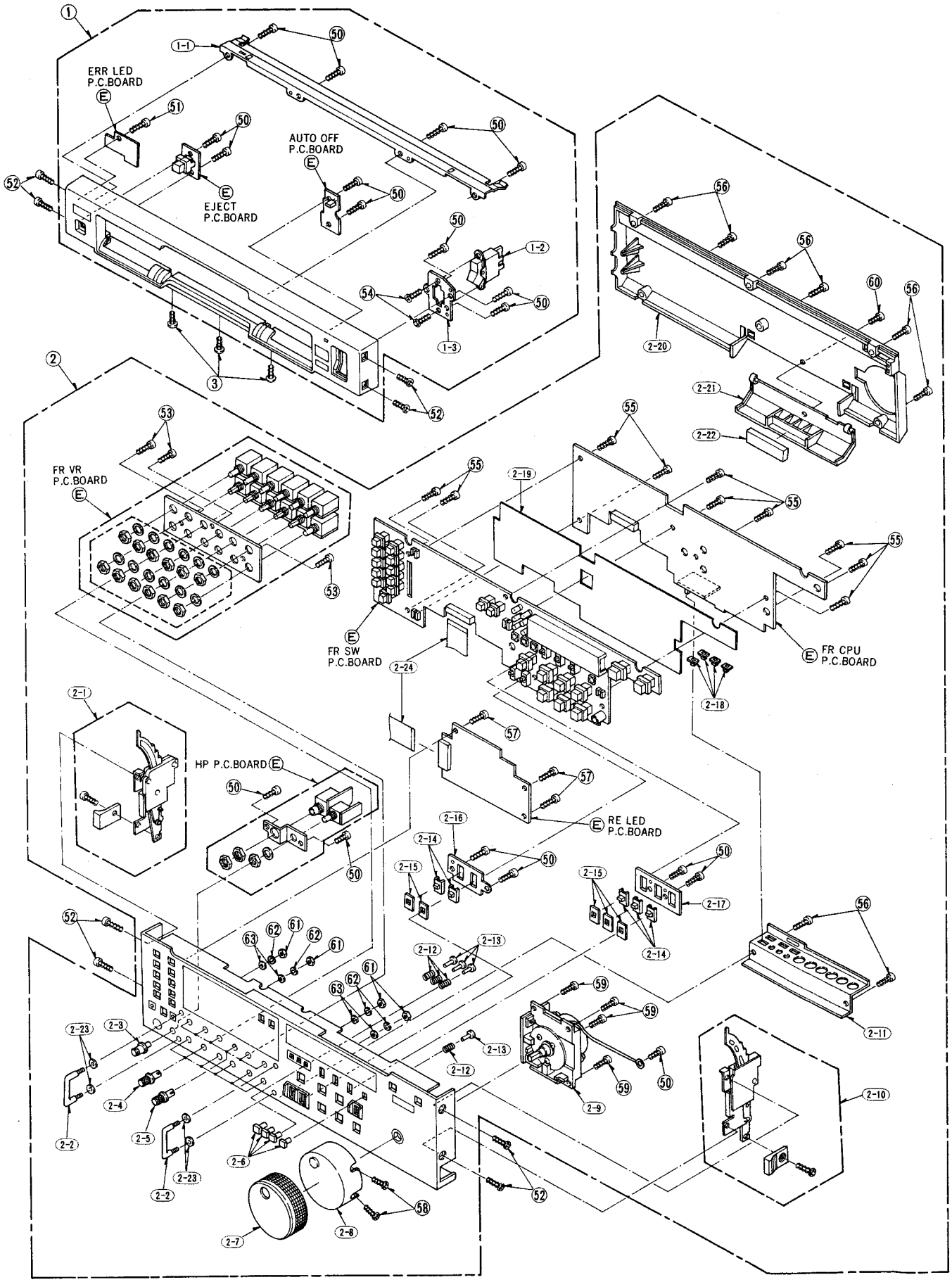

REAR JACK PANEL ASSEMBLY

Ref.No.		Part No.	Part Name & Description	Pcs	Remarks
1		VEJ1373	JACK PANEL U	1	
1-1		VJH0694	JACK PANEL	1	
1-2		VGH3194	JACK. PANEL NAMEPLATE	1	
1-3		VJS3462	BNC	1	
1-4		VMP3980	FUSE BOX ANGLE	1	
1-5		VJF1005	FUSE HOLDER	1	
1-6		VMZ2139	HOLDER COVER	1	
1-7		VJF0215	BINDER	1	
1-8		VGH3231	FUSE BOX NAMEPLATE	1	
1-9		XBA1C63NB5	FUSE	1	
E-1		VJP3414A025	CONNECTOR	2	
E-2		VJP3414A015	CONNECTOR	1	
E-3		VJP3414A009	CONNECTOR	2	
E-4		VMP3968	CONNECTOR ANGLE	1	
E-5		VJS3459	BHC	9	
E-6		VJP3417	XLR CONNECTOR (MALE)	10	
E-7		VJS3417	XLR CONNECTOR (FEMALE)	8	
E-8		VJS3463	BNC	4	
2		VEK6296	POWER U	1	
2-1		VJF1062	EDGE GUARD (1)	1	
2-2		VJF0046	CLAMPER	1	
2-3		VGM0990	POWER OUTER BOX (L)	1	
2-4		VMZ1394	BARRIER	1	
2-5		VJF0938	HOLDER	1	
2-6		VMP3969	POWER BOX	1	
2-7		VMZ2101	BARRIER	1	
2-8		VRF0078	FAN MOTOR	1	
2-9		VMP3990	FAN MOTOR GUARD ANGLE	1	
2-10		VGF0388	FAN MOTOR GUARD	1	
2-11		VJH0082	GND TERMINAL	1	
2-12		VMP3971	P.C.BOARD ANGLE	1	
2-13		VMZ2098	FILTER BARRIER	1	
2-14		VJH0082	A/C INLET	1	
2-15		VMZ1252	A/C INLET COVER	1	
2-16		VMZ2151	P.C.BOARD ISOLATION	1	
2-17		VMZ2092	POWER BARRIER	1	
2-18		VHN0011	LOTCH	2	
2-19		VMP3978	P.C.BOARD ANGLE (UPPER)	1	
2-20		VMP3979	P.C.BOARD ANGLE (LOWER)	1	
2-21		VMZ2094	BARRIER	1	
2-22		VGM1003	POWER BOX (R)	1	
2-23		VJF1062	EDGE GUARD (2)	1	
2-24		VMD0683	ANGLE	4	
2-25		VHD0277	SCREW	2	
50		XTN4+6FFZ	SCREW	8	
51		XTB3+6FFZ	SCREW	5	
52		XTN3+10JFZ	SCREW	9	
53		XSN26+6FC	SCREW	36	
54		XYE3+EF8	SCREW	2	
55		XTV3+6F	SCREW	19	
56		XYN3+F6S	SCREW	3	
57		XYE3+EF6	SCREW	10	
58		XTV4+6F	SCREW	1	
59		XSB3+6FZS	SCREW	2	
60		XSN26+4	SCREW	8	
61		XSN4+35FCS	SCREW	4	
62		XTB3+6FFZ	SCREW	2	

REAR JACK PANEL ASSEMBLY

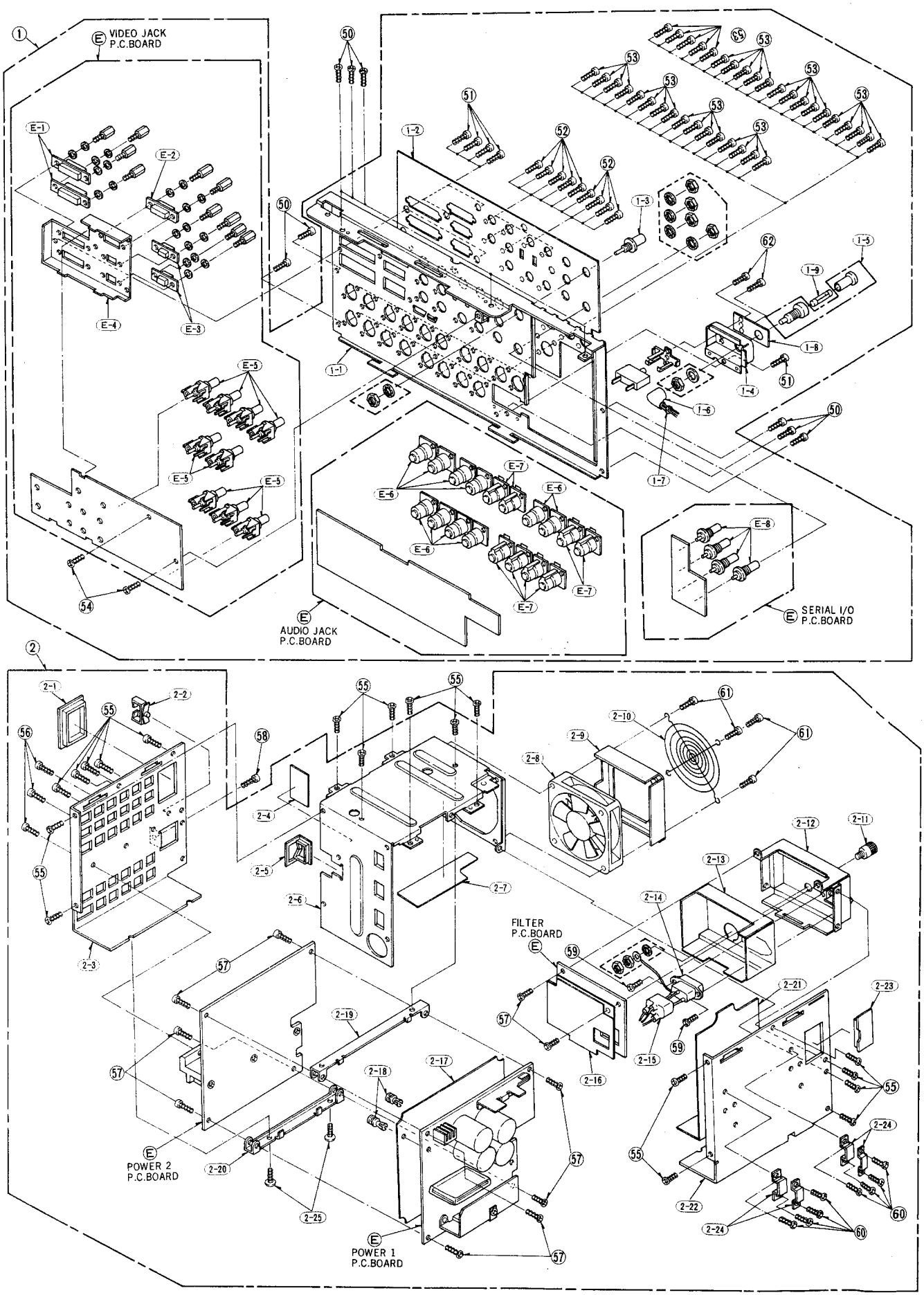

CASSETTE COMPPARTMENT ASSEMBLY

Ref.No.	Part No.	Part Name & Description	Pcs	Remarks
1	VXA5024	FRONT LOADING U	1	
2	VMD1746	OPENER	1	
3	VXA5021	RIGHT SIDE PLATE (1) U	1	
4	VDB1116	MAIN SHAFT RETAINER	1	
5	VML2544	UD PHOTO LEVER	1	
6	VMD1752	KICK GUIDE	1	
7	VMA8056	PHOTO ADJ PLATE	2	
8	VEK5482	PHOTO TR R U	1	
9	VMB2325	V PHOTO LEVER SPRING	1	
10	VML2543	V PHOTO LEVER	1	
11	VMA8902	TOP PLATE	1	
12	VXA5018	LEFT SIDE PLATE U	1	
12-1	VDB1116	MAIN SHAFT RETAINER	1	
12-2	VMD1752	KICK GUIDE	1	
12-3	VXA5019	LEFT SIDE PLATE (1) U	1	
12-4	VEK5483	PHOTO TR L U	1	
12-5	VML2548	PANEL OPENER	1	
13	VXA4431	WORM BASE U	1	
13-1	VXA4432	GEAR BASE (1) U	1	
13-2	VDG0803	WORM WHEEL	1	
13-3	VDG0804	INTERMEDIATE GEAR 2	1	
13-4	VXP1229	WORM GEAR U	1	
13-5	VEM0393	FRONT LOADING MOTOR U	1	
13-6	VMA8440	GEAR BASE	1	
14	VMB2326	UD PHOTO LEVER SPRING	1	
15	VMD1747	CENTER GUIDE	1	
16	VMS4652	RETECTION LEVER SHAFT	1	
17	VMB2323	DETECTION LEVER SPRING	2	
18	VWJ0559	FLEXIBLE CABLE	1	
19	VMD1749	CABLE HOLDER B	1	
20	VMZ1801	INSULATION SHEET	1	
21	VXA4699	CASSETTE HOLDER (A) U	1	
22	VMD1748	CASSETTE GUIDE	2	
23	VMS4629	PRESSURE ROLLER SHAFT	1	
24	VDP1389	PRESSURE ROLLER	6	
25	VML2148	PRESSURE LEVER A (R)	1	
26	VML2149	PRESSURE LEVER A (L)	1	
27	VMB2356	PRESSURE LEVER SPRING	2	
28	VMA8905	PRESSURE ROLLER SPRING	1	
29	VXL2103	KICK DRIVE LEVER R U	1	
30	VXL2104	KICK DRIVE LEVER L U	1	
31	VML2545	KICK LEVER R	1	
32	VML2546	KICK LEVER L	1	
33	VMA8435	DETECTION LEVER BASE	1	
34	VML2542	DETECTION LEVER	2	
35	VMB2324	KICK LEVER SPRING	2	
36	VMA8434	CASSETTE IN SW ANGLE	2	
37	VMA8442	FRONT GUIDE ANGLE	1	
38	VMD1754	ANGLE GUIDE	2	
39	VDP1020	GUIDE ROLLER A	2	
40	VDP1021	GUIDE ROLLER B	2	
41	VDP1388	GUIDE ROLLER D	4	
42	VML2498	WIPER ARM R	1	
43	VML2499	WIPER ARM L	1	
44	VDG0800	WIPER GEAR	2	
45	VMB2327	WIPER CHARGE SPRING	2	
46	VMD1753	CHARGE SPRING COVER	2	
47	VMS4628	MAIN SHAFT	1	
48	VMS2549	BRAKE ARM CAM PIN	1	
49	VDG0802	INTERMEDIATE GEAR 1	1	
50	VDG0801	MAIN SHAFT GEAR	2	
51	VDG0231	PANEL GEAR	1	
52	VMB2611	BLINDER PANEL SPRING	1	
53	VYF1813	BLINDER PANEL A U	1	
53-1	VMA8485	BLINDER PANEL (SUB)	1	
53-2	QBG1210X	GUM	4	
54	VMD1750	CABLE HOLDER A	1	
55	VML2633	PROTECT LEVER	1	
56	VMS3986	LIFT LEVER PIN SHAFT	2	
57	VMB2448	PROTECT LEVER SPRING	1	
58	VMX1011	METER SPACER	2	
59	VMD1883	CABLE HOLDER C	1	
60	VJR3	CLAMPER	1	

Ref.No.	Part No.	Part Name & Description	Pcs	Remarks
80	XQN2+A3FZ	SCREW	4	
81	XSN26+6	SCREW	6	
82	XTN2+8J	SCREW	2	
83	XTN26+4F	SCREW	4	
84	XTV26+4F	SCREW	6	
85	XTV3+6F	SCREW	17	
86	XTV26+4FFZ	SCREW	4	
87	XTV3+8F	SCREW	2	
88	XYN26+C4	SCREW	4	
89	XYN26+F4	SCREW	2	
90	XYN3+C4S	SCREW	4	
91	XSN26+4	SCREW	3	
92	XYN3+F8S	SCREW	4	
93	XUC25FP	E-RING	8	
94	XUC3FP	E-RING	11	
95	XUC4FP	E-RING	1	
96	XUC5FP	E-RING	2	
97	XWGV4D7G	WASHER	1	
98	XWGV4Y9G	WASHER	2	
99	XWGV5D9G	WASHER	2	
100	XWE2	WASHER	4	
101	XWG4	WASHER	1	
102	XWGV4Y7G	WASHER	2	
103	XSN2+8	SCREW	4	
104	XWGV4D9G	WASHER	2	
105	XQN26+A6	SCREW	2	

CHASSIS FRAME ASSEMBLY

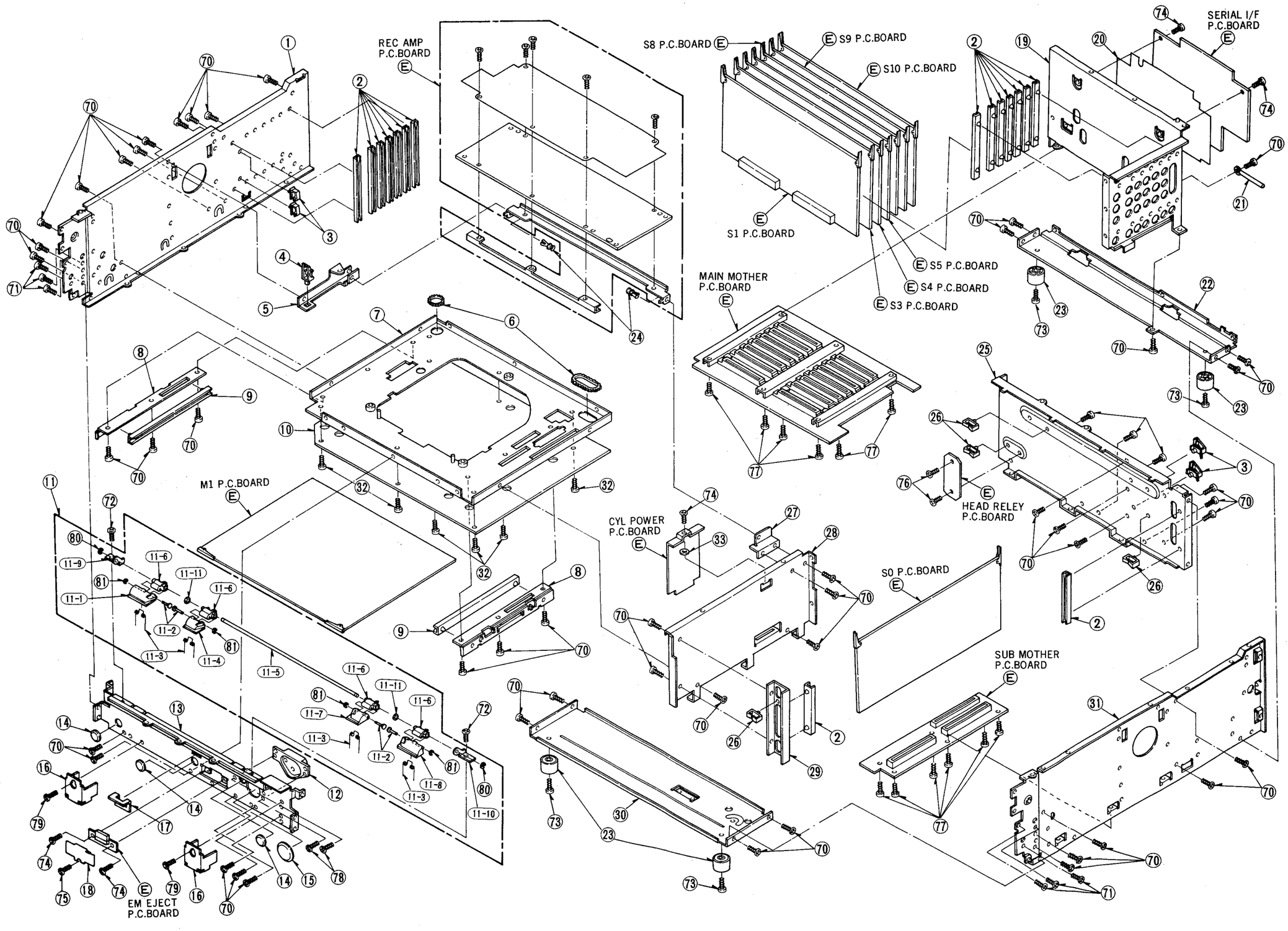

5—152

PACKING PARTS ASSEMBLY

Ref.No.		Part No.	Part Name & Description	Pcs	Remarks
1		VFK0882	S EXTENSION BOARD	1	
2		VFK0883	M EXTENSION BOARD	1	
3		VPN3701	TOP PAD	1	
4		VPN3573	CUSHION (TR)	1	
5		VPN3575	CUSHION (BR)	1	
6		VPN3572	CUSHION (TF)	1	
7		VPN3574	CUSHION (BF)	1	
8		VPG6776	PACKING CASE	1	
9		VJA0746	AC CORD	1	
10		VPG6116	ACCESSORY BOX PAD	1	
11		VPN3700	FRONT PAD	1	

PACKING PARTS ASSEMBLY

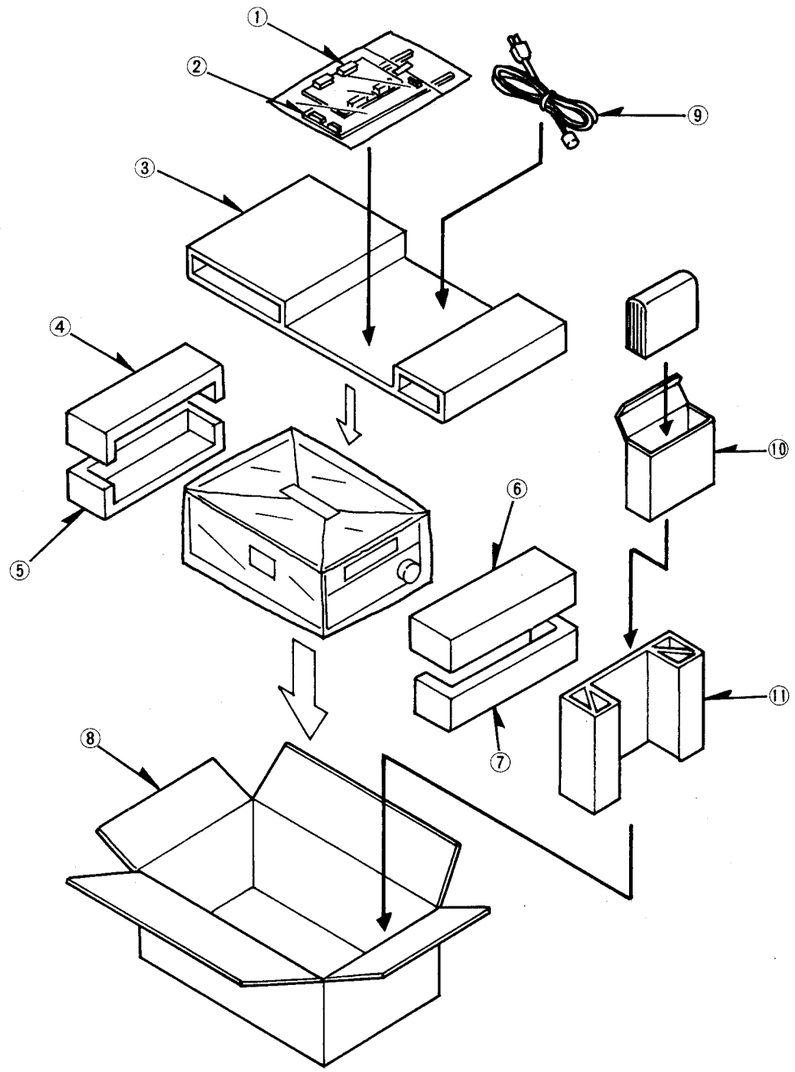

Exploded Views & Parts List

NTSC

Panasonic
Broadcast Systems

CONTENTS

NTSC

ELECTRICAL REPLACEMENT PARTS LIST 5-1
- M1 AV DSP P.C.BOARD(VEP88095A) 5-2
- M SUB 1 AV REC P.C.BOARD(VEP88096B) 5-2
- M SUB 2 V PROCESS P.C.BOARD(VEP88097A) 5-2
- S0 DRIVE P.C.BOARD(VEP82092A) 5-9
- S1 EQ1 P.C.BOARD(VEP85036A) 5-12
- S3 TC/CUE P.C.BOARD(VEP86123A) 5-18
- S3 SUB TC/CUE P.C.BOARD(VEP86124A) 5-18
- S4 SERVO/AT P.C.BOARD(VEP82093A) 5-25
- S5 SYSCON P.C.BOARD(VEP86125A) 5-28
- S8 AUDIO D/A P.C.BOARD(VEP84155A) 5-30
- S9 AUDIO A/D P.C.BOARD(VEP84156A) 5-35
- S10 VIDEO A/D, D/A P.C.BOARD(VEP88093A) 5-39
- MAIN MOTHER P.C.BOARD(VEP80786A) 5-44
- SUB MOTHER P.C.BOARD(VEP80787A) 5-44
- REC AMP P.C.BOARD(VEP85037A) 5-44
- CYL POWER P.C.BOARD(VEP85040A) 5-46
- MECA IF P.C.BOARD(VEP80788A) 5-47
- SERVO CNTL P.C.BOARD(VEP82097A) 5-47
- HEAD CONECTION P.C.BOARD(VEP80785A) 5-48
- EM EJECT P.C.BOARD(VEP82098A) 5-48
- SERIAL IF P.C.BOARD(VEP88098A) 5-48
- AUDIO JACK P.C.BOARD(VEP84157A) 5-49
- VIDEO JACK P.C.BOARD(VEP88099A) 5-50
- SERIAL I/O P.C.BOARD(VEP88106A) 5-50
- POWER 1 P.C.BOARD(VEP81067A) 5-51
- POWER 1 SUB P.C.BOARD(VEP81070A) 5-51
- POWER 2 SUB P.C.BOARD(VEP81072A) 5-51
- POWER 2 P.C.BOARD(VEP81068A) 5-52
- POWER 3 P.C.BOARD(VEP81069A) 5-53
- AUTO OFF LED P.C.BOARD(VEP80792A) 5-53
- EJECT P.C.BOARD(VEP80790A) 5-54
- ERR LED P.C.BOARD(VEP80804A) 5-54
- HP JACK P.C.BOARD(VEP86131A) 5-54
- HP VR P.C.BOARD(VEP86130A) 5-54
- FR VR P.C.BOARD(VEP86132A) 5-54
- FR CPU P.C.BOARD(VEP86126A) 5-54
- CPU SUB P.C.BOARD(VEP86129A) 5-54
- FR SW P.C.BOARD(VEP86127A) 5-56
- FR LED P.C.BOARD(VEP86128A) 5-57
- S EXTENSION P.C.BOARD(VFK0882) 5-57
- M EXTENSION P.C.BOARD(VFK0883) 5-57

MECHANICAL REPLACEMENT PARTS LIST
- MECHANICAL COMPONENT ASSEMBLY(1) 5-58
- MECHANICAL COMPONENT ASSEMBLY(2) 5-60
- MECHANICAL COMPONENT ASSEMBLY(3) 5-62
- MECHANICAL COMPONENT ASSEMBLY(4) 5-64
- CASING PARTS ASSEMBLY 5-66
- FRONT PANEL ASSEMBLY 5-68
- REAR JACK PANEL ASSEMBLY 5-70
- CASSETTE COMPPARTMENT ASSEMBLY 5-72
- CHASSIS FRAME ASSEMBLY 5-74
- PACKING PARTS ASSEMBLY 5-76

ELECTRICAL REPLACEMENT PARTS LIST

Ref.No.	Part No.	Part Name & Description	Pcs	Remarks
M1	VEP88095A	P.C.BOARD W/COMPONENT	1	
		AV DSP		
M SUB1	VEP88096B	P.C.BOARD W/COMPONENT	1	ON VEP88095A
		AV REC		
M SUB2	VEP88097A	P.C.BOARD W/COMPONENT	1	ON VEP88095A
		V PROCESS		
S0	VEP82092A	P.C.BOARD W/COMPONENT	1	
		DRIVE		
S1	VEP85036A	P.C.BOARD W/COMPONENT	1	
		EQ1		
S3	VEP86123A	P.C.BOARD W/COMPONENT	1	
		TC/CUE		
S3 SUB	VEP86124A	P.C.BOARD W/COMPONENT	1	ON VEP86123A
		TC/CUE SUB		
S4	VEP82093A	P.C.BOARD W/COMPONENT	1	
		SERVO/AT		
S5	VEP86125A	P.C.BOARD W/COMPONENT	1	
		SYSCON		
S8	VEP84155A	P.C.BOARD W/COMPONENT	1	
		AUDIO D/A		
S9	VEP84156A	P.C.BOARD W/COMPONENT	1	
		AUDIO A/D		
S10	VEP88093A	P.C.BOARD W/COMPONENT	1	
		VIDEO A/D,D/A		
	VEP80786A	P.C.BOARD W/COMPONENT	1	
		MAIN MOTHER		
	VEP80787A	P.C.BOARD W/COMPONENT	1	ON VEP80786A
		SUB MOTHER		
	VEP85037A	P.C.BOARD W/COMPONENT	1	
		REC AMP		
	VEP85040A	P.C.BOARD W/COMPONENT	1	
		CYL POWER		
	VEP80788A	P.C.BOARD W/COMPONENT	1	
		MECA IF		
	VEP82097A	P.C.BOARD W/COMPONENT	1	
		SERVO CNTL		
	VEP80785A	P.C.BOARD W/COMPONENT	1	
		HEAD CONECTION		
	VEP82098A	P.C.BOARD W/COMPONENT	1	
		EM EJECT		
	VEP88098A	P.C.BOARD W/COMPONENT	1	
		SERIAL IF		
	VEP84157A	P.C.BOARD W/COMPONENT	1	
		AUDIO JACK		
	VEP88099A	P.C.BOARD W/COMPONENT	1	
		VIDEO JACK		
	VEP88106A	P.C.BOARD W/COMPONENT	1	
		SERIAL I/O		
	VEP81067A	P.C.BOARD W/COMPONENT	1	
		POWER 1		
	VEP81070A	P.C.BOARD W/COMPONENT	1	ON VEP81067A
		POWER 1 SUB		
	VEP81072A	P.C.BOARD W/COMPONENT	1	ON VEP81067A
		POWER 2 SUB		

Ref.No.	Part No.	Part Name & Description	Pcs	Remarks
	VEP81068A	P.C.BOARD W/COMPONENT	1	
		POWER 2		
	VEP81069A	P.C.BOARD W/COMPONENT	1	
		POWER 3		
	VEP80792A	P.C.BOARD W/COMPONENT	1	
		AUTO OFF LED		
	VEP80790A	P.C.BOARD W/COMPONENT	1	
		EJECT		
	VEP80804A	P.C.BOARD W/COMPONENT	1	
		ERR LED		
	VEP86131A	P.C.BOARD W/COMPONENT	1	
		HP JACK		
	VEP86130A	P.C.BOARD W/COMPONENT	1	ON VEP86131A
		HP VR		
	VEP86132A	P.C.BOARD W/COMPONENT	1	
		FR VR		
	VEP86126A	P.C.BOARD W/COMPONENT	1	
		FR CPU		
	VEP86129A	P.C.BOARD W/COMPONENT	1	ON VEP86126A
		CPU SUB		
	VEP86127A	P.C.BOARD W/COMPONENT	1	
		FR SW		
	VEP86128A	P.C.BOARD W/COMPONENT	1	
		FR LED		
	VFK0882	P.C.BOARD W/COMPONENT	1	
		S EXTENSION		
	VFK0883	P.C.BOARD W/COMPONENT	1	
		M EXTENSION		

M1 AV DSP VEP88095A
M SUB1 AV REC VEP88096B M SUB2 V PROCESS VEP88097A

M1

M SUB2

M SUB2

Ref.No.		Part No.	Part Name & Description	Pcs	Remarks
M1	■	VEP88095A	P.C.BOARD W/COMPONENT		
			AV DSP		
M SUB1	■	VEP88096A	P.C.BOARD W/COMPONENT		FOR VEP88095A
			AV REC		
M SUB2	■	VEP88097A	P.C.BOARD W/COMPONENT		FOR VEP88095A
			V PROCESS		
			CAPACITORS		
C8001		ECEV1CV470	E.CAPACITOR 16V 47U	1	
C8001		ECUX1H103KBV	C.CAPACITOR CH 50V 0.01U	1	
C8001,02		ECUX1H103KBV	C.CAPACITOR CH 50V 0.01U	2	
C8002		ECUX1H103KBV	C.CAPACITOR CH 50V 0.01U	1	
C8002,03		ECUX1H103KBV	C.CAPACITOR CH 50V 0.01U	2	
C8003		ECUX1H103KBV	C.CAPACITOR CH 50V 0.01U	1	
C8003		ECUX1H103KBV	C.CAPACITOR CH 50V 0.01U	1	
C8004		ECEV1CV470	E.CAPACITOR 16V 47U	1	
C8004		ECUX1H103KBV	C.CAPACITOR CH 50V 0.01U	1	
C8004		ECUX1H103KBV	C.CAPACITOR CH 50V 0.01U	1	
C8005		ECEV1CV470	E.CAPACITOR 16V 47U	1	
C8005		ECUX1H103KBV	C.CAPACITOR CH 50V 0.01U	1	
C8005,06		ECUX1H103KBV	C.CAPACITOR CH 50V 0.01U	2	
C8006		ECUX1H103KBV	C.CAPACITOR CH 50V 0.01U	1	
C8006,07		ECUX1H103KBV	C.CAPACITOR CH 50V 0.01U	2	
C8007		ECUX1H103KBV	C.CAPACITOR CH 50V 0.01U	1	
C8007		ECUX1H103KBV	C.CAPACITOR CH 50V 0.01U	1	
C8008		ECEV1CV470	E.CAPACITOR 16V 47U	1	
C8008-10		ECUX1H103KBV	C.CAPACITOR CH 50V 0.01U	3	
C8010,11		ECUX1H103KBV	C.CAPACITOR CH 50V 0.01U	2	
C8011,12		ECUX1H103KBV	C.CAPACITOR CH 50V 0.01U	2	
C8012,13		ECUX1H103KBV	C.CAPACITOR CH 50V 0.01U	2	
C8013,14		ECUX1H103KBV	C.CAPACITOR CH 50V 0.01U	2	
C8014,15		ECUX1H103KBV	C.CAPACITOR CH 50V 0.01U	2	
C8015,16		ECUX1H103KBV	C.CAPACITOR CH 50V 0.01U	2	
C8016,17		ECUX1H103KBV	C.CAPACITOR CH 50V 0.01U	2	
C8017,18		ECUX1H103KBV	C.CAPACITOR CH 50V 0.01U	2	
C8018,19		ECUX1H103KBV	C.CAPACITOR CH 50V 0.01U	2	
C8019,20		ECUX1H103KBV	C.CAPACITOR CH 50V 0.01U	2	
C8020,21		ECUX1H103KBV	C.CAPACITOR CH 50V 0.01U	2	
C8021,22		ECUX1H103KBV	C.CAPACITOR CH 50V 0.01U	2	
C8022,23		ECUX1H103KBV	C.CAPACITOR CH 50V 0.01U	2	
C8023,24		ECUX1H103KBV	C.CAPACITOR CH 50V 0.01U	2	
C8024,25		ECUX1H103KBV	C.CAPACITOR CH 50V 0.01U	2	
C8025,26		ECUX1H103KBV	C.CAPACITOR CH 50V 0.01U	2	
C8026,27		ECUX1H103KBV	C.CAPACITOR CH 50V 0.01U	2	
C8027,28		ECUX1H103KBV	C.CAPACITOR CH 50V 0.01U	2	
C8028,29		ECUX1H103KBV	C.CAPACITOR CH 50V 0.01U	2	
C8029,30		ECUX1H103KBV	C.CAPACITOR CH 50V 0.01U	2	
C8030,31		ECUX1H103KBV	C.CAPACITOR CH 50V 0.01U	2	
C8031,32		ECUX1H103KBV	C.CAPACITOR CH 50V 0.01U	2	
C8032,33		ECUX1H103KBV	C.CAPACITOR CH 50V 0.01U	2	
C8033,34		ECUX1H103KBV	C.CAPACITOR CH 50V 0.01U	2	
C8034,35		ECUX1H103KBV	C.CAPACITOR CH 50V 0.01U	2	
C8035,36		ECUX1H103KBV	C.CAPACITOR CH 50V 0.01U	2	
C8036,37		ECUX1H103KBV	C.CAPACITOR CH 50V 0.01U	2	
C8037-40		ECUX1H103KBV	C.CAPACITOR CH 50V 0.01U	4	
C8040		ECUX1H103ZFV	C.CAPACITOR CH 50V 0.01U	1	
C8041		ECUX1H103KBV	C.CAPACITOR CH 50V 0.01U	1	
C8041		ECUX1H103ZFV	C.CAPACITOR CH 50V 0.01U	1	
C8042		ECUX1H103KBV	C.CAPACITOR CH 50V 0.01U	1	
C8042		ECUX1H103ZFV	C.CAPACITOR CH 50V 0.01U	1	
C8043		ECUX1H103KBV	C.CAPACITOR CH 50V 0.01U	1	
C8043		ECUX1H103ZFV	C.CAPACITOR CH 50V 0.01U	1	
C8044		ECUX1H103KBV	C.CAPACITOR CH 50V 0.01U	1	
C8044		ECUX1H103ZFV	C.CAPACITOR CH 50V 0.01U	1	
C8045		ECUX1H103KBV	C.CAPACITOR CH 50V 0.01U	1	
C8045		ECUX1H103ZFV	C.CAPACITOR CH 50V 0.01U	1	
C8046		ECUX1H103KBV	C.CAPACITOR CH 50V 0.01U	1	
C8046		ECUX1H103ZFV	C.CAPACITOR CH 50V 0.01U	1	
C8047		ECUX1H103KBV	C.CAPACITOR CH 50V 0.01U	1	

Ref.No.		Part No.	Part Name & Description	Pcs	Remarks
C8047		ECUX1H103ZFV	C.CAPACITOR CH 50V 0.01U	1	
C8048-56		ECUX1H103KBV	C.CAPACITOR CH 50V 0.01U	9	
C8056		ECUX1H103ZFV	C.CAPACITOR CH 50V 0.01U	1	
C8057		ECUX1H103KBV	C.CAPACITOR CH 50V 0.01U	1	
C8057		ECUX1H103ZFV	C.CAPACITOR CH 50V 0.01U	1	
C8058		ECUX1H103KBV	C.CAPACITOR CH 50V 0.01U	1	
C8058		ECUX1H103ZFV	C.CAPACITOR CH 50V 0.01U	1	
C8059		ECUX1H103KBV	C.CAPACITOR CH 50V 0.01U	1	
C8059		ECUX1H103ZFV	C.CAPACITOR CH 50V 0.01U	1	
C8060		ECUX1H103KBV	C.CAPACITOR CH 50V 0.01U	1	
C8060		ECUX1H103ZFV	C.CAPACITOR CH 50V 0.01U	1	
C8061		ECUX1H103KBV	C.CAPACITOR CH 50V 0.01U	1	
C8061		ECUX1H103ZFV	C.CAPACITOR CH 50V 0.01U	1	
C8062		ECUX1H103KBV	C.CAPACITOR CH 50V 0.01U	1	
C8062-69		ECUX1H103ZFV	C.CAPACITOR CH 50V 0.01U	8	
C8070		ECUX1H103KBV	C.CAPACITOR CH 50V 0.01U	1	
C8070		ECUX1H103ZFV	C.CAPACITOR CH 50V 0.01U	1	
C8071		ECUX1H103KBV	C.CAPACITOR CH 50V 0.01U	1	
C8071		ECUX1H103ZFV	C.CAPACITOR CH 50V 0.01U	1	
C8072		ECUX1H103KBV	C.CAPACITOR CH 50V 0.01U	1	
C8072		ECUX1H103ZFV	C.CAPACITOR CH 50V 0.01U	1	
C8073		ECUX1H103KBV	C.CAPACITOR CH 50V 0.01U	1	
C8073		ECUX1H103ZFV	C.CAPACITOR CH 50V 0.01U	1	
C8074		ECUX1H103KBV	C.CAPACITOR CH 50V 0.01U	1	
C8074		ECUX1H103ZFV	C.CAPACITOR CH 50V 0.01U	1	
C8075		ECUX1H103KBV	C.CAPACITOR CH 50V 0.01U	1	
C8075		ECUX1H103ZFV	C.CAPACITOR CH 50V 0.01U	1	
C8076		ECUX1H103KBV	C.CAPACITOR CH 50V 0.01U	1	
C8076		ECUX1H103ZFV	C.CAPACITOR CH 50V 0.01U	1	
C8077		ECUX1H103KBV	C.CAPACITOR CH 50V 0.01U	1	
C8077		ECUX1H103ZFV	C.CAPACITOR CH 50V 0.01U	1	
C8078		ECUX1H103KBV	C.CAPACITOR CH 50V 0.01U	1	
C8078		ECUX1H103ZFV	C.CAPACITOR CH 50V 0.01U	1	
C8079		ECUX1H103KBV	C.CAPACITOR CH 50V 0.01U	1	
C8079		ECUX1H103ZFV	C.CAPACITOR CH 50V 0.01U	1	
C8080		ECUX1H103KBV	C.CAPACITOR CH 50V 0.01U	1	
C8080		ECUX1H103ZFV	C.CAPACITOR CH 50V 0.01U	1	
C8081		ECUX1H103KBV	C.CAPACITOR CH 50V 0.01U	1	
C8081		ECUX1H103ZFV	C.CAPACITOR CH 50V 0.01U	1	
C8082		ECUX1H103KBV	C.CAPACITOR CH 50V 0.01U	1	
C8082-77		ECUX1H103ZFV	C.CAPACITOR CH 50V 0.01U	96	
C8279		ECUX1H121JCV	C.CAPACITOR 50V 120P	1	
C8280-85		ECEV1CV470	E.CAPACITOR 16V 47U	6	
C8286-90		ECUX1H103KBV	C.CAPACITOR CH 50V 0.01U	5	
C8300-04		ECUX1H103KBV	C.CAPACITOR CH 50V 0.01U	5	
C8305,06		ECEV1CV470	E.CAPACITOR 16V 47U	2	
C8307,08		ECUX1H103KBV	C.CAPACITOR CH 50V 0.01U	2	
C8500,01		ECEV1CV470	E.CAPACITOR 16V 47U	2	
C8502,03		ECUX1H103KBV	C.CAPACITOR CH 50V 0.01U	2	
C8504		ECEV1HN010	E.CAPACITOR 50V 1U	1	
C8505-07		ECUX1H103KBV	C.CAPACITOR CH 50V 0.01U	3	
C8508		ECUM1E104KBN	C.CAPACITOR 25V 0.1U	1	
C8509,10		ECUX1H103KBV	C.CAPACITOR CH 50V 0.01U	2	
C8511		ECUM1E104KBN	C.CAPACITOR 25V 0.1U	1	
C8512		ECUX1H103KBV	C.CAPACITOR CH 50V 0.01U	1	
C8513		ECUM1E104KBN	C.CAPACITOR 25V 0.1U	1	
C8514		ECUX1H820JCV	C.CAPACITOR CH 50V 82P	1	
C8516		ECUX1H103KBV	C.CAPACITOR CH 50V 0.01U	1	
C8517		ECUM1E104KBN	C.CAPACITOR 25V 0.1U	1	
C8518		ECUX1H103KBV	C.CAPACITOR CH 50V 0.01U	1	
C8519		ECUM1E104KBN	C.CAPACITOR 25V 0.1U	1	
C8520,21		ECUX1H470JCV	C.CAPACITOR 50V 47P	2	
C8522,23		ECUX1H103KBV	C.CAPACITOR CH 50V 0.01U	2	
C8524		ECA1HXKN2R2	E.CAPACITOR 50V 2.2U	1	
C8525		ECEV1EV100	E.CAPACITOR 25V 10U	1	
C8526,27		ECUX1H103KBV	C.CAPACITOR CH 50V 0.01U	2	
C8528,29		ECUX1H330JCV	C.CAPACITOR 50V 33P	2	
C8530		ECUX1H103KBV	C.CAPACITOR CH 50V 0.01U	1	
C8531		ECUX1H102KBV	C.CAPACITOR 50V 1000P	1	
C8532-41		ECUX1H103KBV	C.CAPACITOR CH 50V 0.01U	10	
C8542,43		ECUX1H820JCV	C.CAPACITOR CH 50V 82P	2	
C8544,45		ECUX1H103KBV	C.CAPACITOR CH 50V 0.01U	2	
C8546		ECUX1H561JCV	C.CAPACITOR 50V 560P	1	
C8547		ECUX1H101JCV	C.CAPACITOR CH 50V 100P	1	
C8548,49		ECUX1H103KBV	C.CAPACITOR CH 50V 0.01U	2	

Ref.No.		Part No.	Part Name & Description	Pcs	Remarks
C8550		ECUX1H221JCV	C.CAPACITOR CH 50V 220P	1	
C8551		ECUM1E104KBN	C.CAPACITOR 25V 0.1U	1	
C8552,53		ECUX1H103KBV	C.CAPACITOR CH 50V 0.01U	2	
C8554		ECUX1H102KBV	C.CAPACITOR 50V 1000P	1	
C8555,56		ECUX1H103KBV	C.CAPACITOR CH 50V 0.01U	2	
C8557,58		ECUM1E104KBN	C.CAPACITOR 25V 0.1U	2	
C8559-66		ECEV1CV470	E.CAPACITOR 16V 47U	8	
C8567		ECEV1EV330	E.CAPACITOR 25V 33U	1	
C8568,69		ECEV1CV470	E.CAPACITOR 16V 47U	2	
C8570,71		ECEV1EV330	E.CAPACITOR 25V 33U	2	
C8572,73		ECEV1CV470	E.CAPACITOR 16V 47U	2	
C8574		ECEV1EV330	E.CAPACITOR 25V 33U	1	
C8575-90		ECUX1H103KBV	C.CAPACITOR CH 50V 0.01U	16	
C8591		ECEV1HN010	E.CAPACITOR 50V 1U	1	
C8592		ECEV1CV470	E.CAPACITOR 16V 47U	1	
C8593-95		ECUX1H103KBV	C.CAPACITOR CH 50V 0.01U	3	
C8596		ECUX1H820JCV	C.CAPACITOR CH 50V 82P	1	
C8597,98		ECUX1H103KBV	C.CAPACITOR CH 50V 0.01U	2	
C8599		ECUX1H472KBV	C.CAPACITOR 50V 4700P	1	
C8600		ECUX1H103KBV	C.CAPACITOR CH 50V 0.01U	1	
C8601		ECUX1H330JCV	C.CAPACITOR 50V 33P	1	
C8602		ECUM1E104KBN	C.CAPACITOR 25V 0.1U	1	
C8603		ECUX1H180JCV	C.CAPACITOR 50V 18P	1	
C8604		ECUX1H680JCV	C.CAPACITOR 50V 68P	1	
C8605,06		ECUM1E104KBN	C.CAPACITOR 25V 0.1U	2	
C8680-88		ECUX1H103KBV	C.CAPACITOR CH 50V 0.01U	9	
C8801		ECEV1CV470	E.CAPACITOR 16V 47U	1	
C8802		ECEV1CV100	E.CAPACITOR 16V 10U	1	
C8803		ECEV1CV470	E.CAPACITOR 16V 47U	1	
C8804		ECEV1CV100	E.CAPACITOR 16V 10U	1	
C8805		ECUX1H101JCV	C.CAPACITOR CH 50V 100P	1	
C8806,07		ECUX1H103KBV	C.CAPACITOR CH 50V 0.01U	2	
C8808		ECUX1H121JCV	C.CAPACITOR 50V 120P	1	
C8809,10		ECUX1H103KBV	C.CAPACITOR CH 50V 0.01U	2	
C8811		ECUX1H101JCV	C.CAPACITOR CH 50V 100P	1	
C8812,13		ECUX1H103KBV	C.CAPACITOR CH 50V 0.01U	2	
C8814		ECUX1H121JCV	C.CAPACITOR 50V 120P	1	
C8815,16		ECUX1H103KBV	C.CAPACITOR CH 50V 0.01U	2	
C8817,18		ECEV1HV2R2	E.CAPACITOR 50V 2.2U	2	
C8819-24		ECUX1H103KBV	C.CAPACITOR CH 50V 0.01U	6	
C8825-27		ECEV1CV100	E.CAPACITOR 16V 10U	3	
C8828		ECEV1HV0R1	E.CAPACITOR 50V 0.1U	1	
C8829		ECEV1HNR22	E.CAPACITOR 50V 0.22U	1	
C8830-32		ECEV1HV0R1	E.CAPACITOR 50V 0.1U	3	
C8833-35		ECEV1CV470	E.CAPACITOR 16V 47U	3	
C8836		ECUX1H180JCV	C.CAPACITOR 50V 18P	1	
C8837-39		ECUX1H470JCV	C.CAPACITOR 50V 47P	3	
C8840-51		ECUX1H103KBV	C.CAPACITOR CH 50V 0.01U	12	
C8852		ECEV1EV100	E.CAPACITOR 25V 10U	1	
C8853,54		ECEV1CV470	E.CAPACITOR 16V 47U	2	
C8855,56		ECEV1CV100	E.CAPACITOR 16V 10U	2	
C8857-59		ECUX1H103KBV	C.CAPACITOR CH 50V 0.01U	3	
C8860		ECUX1H220JCV	C.CAPACITOR CH 50V 22P	1	
C8861-68		ECUX1H103KBV	C.CAPACITOR CH 50V 0.01U	8	
C8869		ECUX1H472KBV	C.CAPACITOR 50V 4700P	1	
C8870,71		ECUX1H103KBV	C.CAPACITOR CH 50V 0.01U	2	
C8872		ECUX1H472KBV	C.CAPACITOR 50V 4700P	1	
C8873		ECEV1CV470	E.CAPACITOR 16V 47U	1	
C8874,75		ECUX1H103KBV	C.CAPACITOR CH 50V 0.01U	2	
C8895		ECEV1CV470	E.CAPACITOR 16V 47U	1	
C8896-00		ECUX1H103KBV	C.CAPACITOR CH 50V 0.01U	5	
C8901		ECUX1H150JCV	C.CAPACITOR 50V 15P	1	
C8902		ECEV1CV470	E.CAPACITOR 16V 47U	1	
C8903,04		ECUX1H103KBV	C.CAPACITOR CH 50V 0.01U	2	
C8905		ECEV1EV330	E.CAPACITOR 25V 33U	1	
C8906-08		ECUX1H103KBV	C.CAPACITOR CH 50V 0.01U	3	
C8909,10		ECEV1EV330	E.CAPACITOR 25V 33U	2	
C8911-13		ECUX1H103KBV	C.CAPACITOR CH 50V 0.01U	3	
C8914		ECEV1EV330	E.CAPACITOR 25V 33U	1	
C8915-19		ECEV1EV100	E.CAPACITOR 25V 10U	5	
C8920-23		ECUX1H103KBV	C.CAPACITOR CH 50V 0.01U	4	
D8280		MA151K	DIODE	1	

Ref.No.		Part No.	Part Name & Description	Pcs	Remarks
D8500		MA151K	DIODE	1	
D8501		MA335-R	DIODE	1	
D8502		MA151WK	DIODE	1	
D8503		MA717	DIODE	1	
D8801-04		MA151K	DIODE	4	
FL8001,02		VLF0931	COIL	2	
FL8280,81		VLF0931	COIL	2	
FL8300,01		VLF0576	FILTER	2	
FL8500		VLF0931	COIL	1	
FL8501-04		VLF0576	FILTER	4	
FL8801		VLF0928	FILTER	1	
FL8802-06		VLF0576	FILTER	5	
IC8001		SN74AS244NS	IC	1	
IC8001		SN74AS244NS	IC	1	
IC8002		L7A0650	IC	1	
IC8002		SN74AS244NS	IC	1	
IC8003		L7A0348	IC	1	
IC8003		UPD65240GC057	IC	1	
IC8004		SN74ALS541S	IC	1	
IC8004		SN74LS682NS	IC	1	
IC8005		L7A0649	IC	1	
IC8005		MC74HC04AF	IC	1	
IC8006		SN74ALS541S	IC	1	
IC8006		UPD42280G3E2	IC	1	
IC8007		CXD2105AQ	IC	1	
IC8007		VSC3KI007FL	IC	1	
IC8008		CXD2105AQ	IC	1	
IC8009		VSI1356	IC	1	
IC8010		MC10H116M	IC	1	
IC8010,11		MC74HC574AF	IC	2	
IC8012		L7A1041	IC	1	
IC8012		MC74HC541F	IC	1	
IC8013		M5256BVP-70L	IC	1	
IC8014		HM628128L	IC	1	
IC8015		D65658GMD68	IC	1	
IC8015		M5256BVP-70L	IC	1	
IC8016		HM628128L	IC	1	
IC8017		M5256BVP-70L	IC	1	
IC8017		SN74ALS541S	IC	1	
IC8018		HM628128L	IC	1	
IC8018		UPD42280G3E2	IC	1	
IC8019		M5256BVP-70L	IC	1	
IC8019		UPD42280G3E2	IC	1	
IC8020		HM628128L	IC	1	
IC8020,21		MC74HC574AF	IC	2	
IC8021		SLA6080F5B	IC	1	
IC8022		MB81C78A35PF	IC	1	
IC8022		MC74HC574AF	IC	1	
IC8023		L7A0674	IC	1	
IC8023,24		MC74HC574AF	IC	2	
IC8024		M5278J-35	IC	1	
IC8025		MC74HC574AF	IC	1	
IC8025		M5278J-35	IC	1	
IC8026		MC74HC574AF	IC	1	
IC8026		SN74ALS541S	IC	1	
IC8027		MC74HC541F	IC	1	
IC8027		SN74ALS541S	IC	1	
IC8028		MC74HC541F	IC	1	
IC8028		SN74HCT541N	IC	1	
IC8030		VSI1360	IC	1	
IC8030		74F574SJ	IC	1	
IC8031-35		UPD42102G-3	IC	5	
IC8036		L7A0344	IC	1	
IC8038		74F574SJ	IC	1	
IC8039		SN74AS244NS	IC	1	
IC8050,51		SN74LS541NS	IC	2	
IC8052		SN74AS257NS	IC	1	
IC8053		SN74AS244NS	IC	1	
IC8054-56		MC10H125M	IC	3	

Ref.No.		Part No.	Part Name & Description	Pcs	Remarks
IC8057		VSI1353	IC	1	
IC8100,01		UPD42101G-3	IC	2	
IC8102,03		SN74LS541NS	IC	2	
IC8104,05		MC74HC574AF	IC	2	
IC8106,07		MC74HC164F	IC	2	
IC8108		74F521SJ	IC	1	
IC8109,10		SN74AS244NS	IC	2	
IC8111		SN74AS240NS	IC	1	
IC8112-15		MC10H124M	IC	4	
IC8201-03		UPD71055GB	IC	3	
IC8204		MC74HC00AF	IC	1	
IC8205-07		SN74ALS541S	IC	3	
IC8208		SN74ALS245A	IC	1	
IC8209		MC74HC32AF	IC	1	
IC8211		MC74HC32AF	IC	1	
IC8214,15		MC74HC27F	IC	2	
IC8220-22		MC74HC138AF	IC	3	
IC8224		MC74HC10F	IC	1	
IC8226		MC74HC04AF	IC	1	
IC8230-32		SN74S1051NS	IC	3	
IC8233,34		SN74S1053NS	IC	2	
IC8235-38		SN74S1051NS	IC	4	
IC8282		UPC337H	IC	1	
IC8300		MC74HC74AF	IC	1	
IC8302,03		MC74HC574AF	IC	2	
IC8304,05		MC74HC541F	IC	2	
IC8306		L7A0754	IC	1	
IC8307		L7A1041	IC	1	
IC8308		L7A0855	IC	1	
IC8309		MC74HC157AF	IC	1	
IC8310		MC74HC00F	IC	1	
IC8315		M5278J-35	IC	1	
IC8316		M5257AJ-35	IC	1	
IC8317		CXK58102J3	IC	1	
IC8321		M5278J-35	IC	1	
IC8322		M5257AJ-35	IC	1	
IC8323		CXK58102J3	IC	1	
IC8327		M5278J-35	IC	1	
IC8328		M5257AJ-35	IC	1	
IC8329		CXK58102J3	IC	1	
IC8333		M5278J-35	IC	1	
IC8334		M5257AJ-35	IC	1	
IC8335		CXK58102J3	IC	1	
IC8339		M5278J-35	IC	1	
IC8340		M5257AJ-35	IC	1	
IC8341		CXK58102J3	IC	1	
IC8342		SN74AS10NS	IC	1	
IC8343		SN74AS04NS	IC	1	
IC8345		M5278J-35	IC	1	
IC8346		M5257AJ-35	IC	1	
IC8347		CXK58102J3	IC	1	
IC8348		SN74AS10NS	IC	1	
IC8349		SN74AS04NS	IC	1	
IC8351		UPD65664G039	IC	1	
IC8352,53		L7A0754	IC	2	
IC8354,55		L7A0755	IC	2	
IC8356		MB121M246	IC	1	
IC8357		SN74S1051NS	IC	1	
IC8358		MB10H116PFF	IC	1	
IC8362		MB10H116PFF	IC	1	
IC8500		L7A0837	IC	1	
IC8501		L7A0543	IC	1	
IC8502		74F574SJ	IC	1	
IC8503		SN74AS74NS	IC	1	
IC8505		SN74AS244NS	IC	1	
IC8506		SN74AS240NS	IC	1	
IC8507		DAC10GS	IC	1	
IC8510		SN74LS123NS	IC	1	
IC8512		MC74HC86F	IC	1	
IC8516-18		MC74HC574AF	IC	3	
IC8521		74F112SJ	IC	1	
IC8524		NJM084M	IC	1	
IC8528		NE521D	IC	1	
IC8530		MC74HC4053F	IC	1	
IC8531		SN74AS244NS	IC	1	

Ref.No.		Part No.	Part Name & Description	Pcs	Remarks
IC8532		NJM082BM	IC	1	
IC8534		SLA7220F5A	IC	1	
IC8535		SN74LS221NS	IC	1	
IC8536		VSI1354	IC	1	
IC8537		MC74HC02AF	IC	1	
IC8539		SN74AS109NS	IC	1	
IC8540		L7A0756	IC	1	
IC8541		SN74LS221NS	IC	1	
IC8543		UPC624C	IC	1	
IC8544		SN74LS05NS	IC	1	
IC8545		MC74HC574AF	IC	1	
IC8546		NJM4558M	IC	1	
IC8548		NJM360M	IC	1	
IC8549,50		NJM79L12UA	IC	2	
IC8551		NJM79L05UA	IC	1	
IC8552,53		NJM78L12UA	IC	2	
IC8554		NJM78L09UA	IC	1	
IC8555,56		NJM78L05UA	IC	2	
IC8557		NE521D	IC	1	
IC8558		AN91A12S	IC	1	
IC8559		VSI1355	IC	1	
IC8560		SN74AS257NS	IC	1	
IC8801		SN74HCT541N	IC	1	
IC8802,03		UPD42101G-3	IC	2	
IC8806,07		MN4464S08L	IC	2	
IC8808,09		MB621926	IC	2	
IC8810,11		L7A0541	IC	2	
IC8812		VSI1357	IC	1	
IC8813,14		NJM78L05UA	IC	2	
IC8815		MC74HC74AF	IC	1	
IC8817		MC74HC74AF	IC	1	
IC8819		MC74HC04AF	IC	1	
IC8821		74AC157SJ	IC	1	
IC8822		74AC08SJ	IC	1	
IC8824		74AC04SJ	IC	1	
IC8826		SN74LS123NS	IC	1	
IC8827		MN56200VPV	IC	1	
IC8828		L7A0651	IC	1	
IC8829		SN74ALS541S	IC	1	
IC8830		MC74HC74AF	IC	1	
IC8831-33		MC74HC541F	IC	3	
IC8834		MC74HC08AF	IC	1	
IC8836		MC10H124M	IC	1	
IC8841-43		MC4044M	IC	3	
IC8844-46		NJM78L05UA	IC	3	
IC8847		MC74HC157AF	IC	1	
IC8850		74AC08SJ	IC	1	
IC8854		74AC04SJ	IC	1	
IC8857		VSI1358	IC	1	
IC8858		MC74HC541F	IC	1	
IC8859		MB620859PFV	IC	1	
IC8860		L7A0782	IC	1	
IC8861		MB81C79A35PF	IC	1	
IC8862		MB620859PFV	IC	1	
IC8863		MB8289-25PF	IC	1	
IC8864		74F11SJ	IC	1	
IC8865		MB8289-25PF	IC	1	
IC8867		MB8289-25PF	IC	1	
IC8869		L7A0754	IC	1	
IC8870		MN8305S	IC	1	
IC8871		NJM78L05UA	IC	1	
IC8872		NJM4580ED	IC	1	
IC8874		NJM4580ED	IC	1	
IC8876		SN74ALS541S	IC	1	
IC8877		NJM78L12UA	IC	1	
IC8878		NJM79L12UA	IC	1	
IC8879		MC74HC157AF	IC	1	
IC8880		MC74HC541F	IC	1	
IC8881		MB81C4256A80	IC	1	
IC8882		MB621926	IC	1	
IC8883		VSI1359	IC	1	
IC8884		MC74HC157AF	IC	1	
IC8885,86		MC74HC163AF	IC	2	
ICS8009		VJS3396	CONNECTOR (FEMALE)	1	
ICS8057		VJS3396	CONNECTOR (FEMALE)	1	

Ref.No.	Part No.	Part Name & Description	Pcs	Remarks
IC58536	VJS3396	CONNECTOR (FEMALE)	1	
IC58559	VJS3396	CONNECTOR (FEMALE)	1	
IC58812	VJS3096328	CONNECTOR (FEMALE)	1	
IC58857	VJS3096328	CONNECTOR (FEMALE)	1	
IC58883	VJS3109	CONNECTOR (FEMALE)	1	
L8001	VLQ0576	COIL	1	
L8001	VLQ0576	COIL	1	
L8001,02	VLQ0576	COIL	2	
L8002	VLQ0576	COIL	1	
L8002,03	VLQ0576	COIL	2	
L8003,04	VLQ0576	COIL	2	
L8004,05	VLQ0576	COIL	2	
L8005,06	VLQ0576	COIL	2	
L8006	VLQ0576	COIL	1	
L8007	ERJ6GEY0R00	M.RESISTOR CH 1/10W 0	1	
L8007	VLQ0576	COIL	1	
L8008	ERJ6GEY0R00	M.RESISTOR CH 1/10W 0	1	
L8008,09	VLQ0576	COIL	2	
L8009,10	VLQ0576	COIL	2	
L8300	VLQ0576	COIL	1	
L8300,01	VLQ0576	COIL	2	
L8301-11	VLQ0576	COIL	11	
L8500	VLQ0163J221	COIL 220UH	1	
L8501	VLQ0163J680	COIL 68UH	1	
L8502	VLQ0163J221	COIL 220UH	1	
L8700-08	VLQ0576	COIL	9	
L8709	ERJ6GEY0R00	M.RESISTOR CH 1/10W 0	1	
L8710-12	VLQ0576	COIL	3	
P8001,02	VJS3426A060	CONNECTOR (FEMALE)	2	
P8221,22	VJP3454B096	CONNECTOR (MALE)	2	
P8280,81	VJP3409A060	CONNECTOR (MALE)	2	
P8500	VJP3409A080	CONNECTOR (MALE)	1	
P8500	VJS3425A080	CONNECTOR (FEMALE)	1	
P8501	VJP3409A080	CONNECTOR (MALE)	1	
P8501	VJS3425A080	CONNECTOR (FEMALE)	1	
Q8500	2SB709-R	TRANSISTOR CHIP	1	(R)
Q8501,02	2SK608-QR	TRANSISTOR	2	
Q8503	2SB709-R	TRANSISTOR CHIP	1	(R)
Q8801-06	2SC4444	TRANSISTOR	6	
Q8807,08	2SJ163-QR	TRANSISTOR	2	
		RESISTORS		
R8001	ERJ3GEYJ101	M.RESISTOR CH 1/16W 100	1	
R8001,02	ERJ3GEYJ101	M.RESISTOR CH 1/16W 100	2	
R8002	ERJ3GEYJ103	M.RESISTOR CH 1/16W 10K	1	
R8003	ERJ3GEYJ101	M.RESISTOR CH 1/16W 100	1	
R8003	ERJ3GEYJ103	M.RESISTOR CH 1/16W 10K	1	
R8004	ERJ3GEYJ101	M.RESISTOR CH 1/16W 100	1	
R8004,05	ERJ3GEYJ103	M.RESISTOR CH 1/16W 10K	2	
R8005,06	ERJ3GEYJ103	M.RESISTOR CH 1/16W 10K	2	
R8006,07	ERJ3GEYJ103	M.RESISTOR CH 1/16W 10K	2	
R8007,08	ERJ3GEYJ103	M.RESISTOR CH 1/16W 10K	2	
R8008	ERJ3GEYJ331	M.RESISTOR CH 1/16W 330	1	
R8009	ERJ3GEYJ103	M.RESISTOR CH 1/16W 10K	1	
R8009,10	ERJ3GEYJ103	M.RESISTOR CH 1/16W 10K	2	
R8010	ERJ3GEYJ103	M.RESISTOR CH 1/16W 10K	1	
R8011	ERJ3GEYJ101	M.RESISTOR CH 1/16W 100	1	
R8011,12	ERJ3GEYJ103	M.RESISTOR CH 1/16W 10K	2	
R8012,13	ERJ3GEYJ103	M.RESISTOR CH 1/16W 10K	2	
R8013,14	ERJ3GEYJ103	M.RESISTOR CH 1/16W 10K	2	
R8014,15	ERJ3GEYJ103	M.RESISTOR CH 1/16W 10K	2	
R8015,16	ERJ3GEYJ103	M.RESISTOR CH 1/16W 10K	2	
R8016,17	ERJ3GEYJ103	M.RESISTOR CH 1/16W 10K	2	
R8017	ERJ3GEYJ560	M.RESISTOR CH 1/16W 56	1	

Ref.No.	Part No.	Part Name & Description	Pcs	Remarks
R8018	ERJ3GEYJ101	M.RESISTOR CH 1/16W 100	1	
R8018	ERJ3GEYJ560	M.RESISTOR CH 1/16W 56	1	
R8019	ERJ3GEYJ101	M.RESISTOR CH 1/16W 100	1	
R8020,21	ERJ3GEYJ103	M.RESISTOR CH 1/16W 10K	2	
R8021	ERJ3GEYJ560	M.RESISTOR CH 1/16W 56	1	
R8022	ERJ3GEYJ103	M.RESISTOR CH 1/16W 10K	1	
R8022	ERJ3GEYJ560	M.RESISTOR CH 1/16W 56	1	
R8023	ERJ3GEYJ103	M.RESISTOR CH 1/16W 10K	1	
R8023	ERJ3GEYJ391	M.RESISTOR CH 1/16W 390	1	
R8024	ERJ3GEYJ103	M.RESISTOR CH 1/16W 10K	1	
R8024	ERJ3GEYJ391	M.RESISTOR CH 1/16W 390	1	
R8025	ERJ3GEYJ103	M.RESISTOR CH 1/16W 10K	1	
R8025	ERJ3GEYJ391	M.RESISTOR CH 1/16W 390	1	
R8026	ERJ3GEYJ103	M.RESISTOR CH 1/16W 10K	1	
R8026	ERJ3GEYJ391	M.RESISTOR CH 1/16W 390	1	
R8027	ERJ3GEYJ103	M.RESISTOR CH 1/16W 10K	1	
R8027	ERJ3GEYJ391	M.RESISTOR CH 1/16W 390	1	
R8028	ERJ3GEYJ103	M.RESISTOR CH 1/16W 10K	1	
R8028	ERJ3GEYJ391	M.RESISTOR CH 1/16W 390	1	
R8029	ERJ3GEYJ103	M.RESISTOR CH 1/16W 10K	1	
R8029	ERJ3GEYJ391	M.RESISTOR CH 1/16W 390	1	
R8030	ERJ3GEYJ101	M.RESISTOR CH 1/16W 100	1	
R8030	ERJ3GEYJ391	M.RESISTOR CH 1/16W 390	1	
R8031	ERJ3GEYJ103	M.RESISTOR CH 1/16W 10K	1	
R8031	ERJ3GEYJ391	M.RESISTOR CH 1/16W 390	1	
R8032	ERJ3GEYJ101	M.RESISTOR CH 1/16W 100	1	
R8032	ERJ3GEYJ391	M.RESISTOR CH 1/16W 390	1	
R8033	ERJ3GEYJ103	M.RESISTOR CH 1/16W 10K	1	
R8033	ERJ3GEYJ391	M.RESISTOR CH 1/16W 390	1	
R8034	ERJ3GEYJ101	M.RESISTOR CH 1/16W 100	1	
R8034	ERJ3GEYJ391	M.RESISTOR CH 1/16W 390	1	
R8035	ERJ3GEYJ103	M.RESISTOR CH 1/16W 10K	1	
R8035	ERJ3GEYJ391	M.RESISTOR CH 1/16W 390	1	
R8036	ERJ3GEYJ101	M.RESISTOR CH 1/16W 100	1	
R8037	ERJ3GEYJ102	M.RESISTOR CH 1/16W 1K	1	
R8037,38	ERJ3GEYJ103	M.RESISTOR CH 1/16W 10K	2	
R8038	ERJ3GEYJ511	M.RESISTOR CH 3W 510	1	
R8039	ERJ3GEYJ103	M.RESISTOR CH 1/16W 10K	1	
R8039	ERJ3GEYJ103	M.RESISTOR CH 1/16W 10K	1	
R8040	ERJ3GEYJ101	M.RESISTOR CH 1/16W 100	1	
R8040,41	ERJ3GEYJ103	M.RESISTOR CH 1/16W 10K	2	
R8041	ERJ3GEYJ103	M.RESISTOR CH 1/16W 10K	1	
R8042	ERJ3GEYJ101	M.RESISTOR CH 1/16W 100	1	
R8042,43	ERJ3GEYJ101	M.RESISTOR CH 1/16W 100	2	
R8043	ERJ3GEYJ103	M.RESISTOR CH 1/16W 10K	1	
R8044	ERJ3GEYJ101	M.RESISTOR CH 1/16W 100	1	
R8044	ERJ3GEYJ102	M.RESISTOR CH 1/16W 1K	1	
R8045	ERJ3GEYJ101	M.RESISTOR CH 1/16W 100	1	
R8045	ERJ3GEYJ103	M.RESISTOR CH 1/16W 10K	1	
R8046	ERJ3GEYJ101	M.RESISTOR CH 1/16W 100	1	
R8046	ERJ3GEYJ103	M.RESISTOR CH 1/16W 10K	1	
R8047	ERJ3GEYJ101	M.RESISTOR CH 1/16W 100	1	
R8047	ERJ3GEYJ103	M.RESISTOR CH 1/16W 10K	1	
R8048	ERJ3GEYJ101	M.RESISTOR CH 1/16W 100	1	
R8048	ERJ3GEYJ103	M.RESISTOR CH 1/16W 10K	1	
R8049	ERJ3GEYJ101	M.RESISTOR CH 1/16W 100	1	
R8049	ERJ3GEYJ102	M.RESISTOR CH 1/16W 1K	1	
R8050	ERJ3GEYJ101	M.RESISTOR CH 1/16W 100	1	
R8050	ERJ3GEYJ101	M.RESISTOR CH 1/16W 100	1	
R8050	ERJ3GEYJ102	M.RESISTOR CH 1/16W 1K	1	
R8051	ERJ3GEYJ101	M.RESISTOR CH 1/16W 100	1	
R8051	ERJ3GEYJ102	M.RESISTOR CH 1/16W 1K	1	
R8051	ERJ3GEYJ103	M.RESISTOR CH 1/16W 10K	1	
R8052	ERJ3GEYJ101	M.RESISTOR CH 1/16W 100	1	
R8052	ERJ3GEYJ101	M.RESISTOR CH 1/16W 100	1	
R8052	ERJ3GEYJ102	M.RESISTOR CH 1/16W 1K	1	
R8053	ERJ3GEYJ101	M.RESISTOR CH 1/16W 100	1	
R8053	ERJ3GEYJ101	M.RESISTOR CH 1/16W 100	1	
R8053	ERJ3GEYJ103	M.RESISTOR CH 1/16W 10K	1	
R8054	ERJ3GEYJ101	M.RESISTOR CH 1/16W 100	1	
R8054	ERJ3GEYJ101	M.RESISTOR CH 1/16W 100	1	
R8054	ERJ3GEYJ103	M.RESISTOR CH 1/16W 10K	1	
R8055	ERJ3GEYJ101	M.RESISTOR CH 1/16W 100	1	
R8055	ERJ3GEYJ101	M.RESISTOR CH 1/16W 100	1	
R8055	ERJ3GEYJ103	M.RESISTOR CH 1/16W 10K	1	

Ref.No.		Part No.	Part Name & Description	Pcs	Remarks
R8056		ERJ3GEYJ101	M.RESISTOR CH 1/16W 100	1	
R8056		ERJ3GEYJ101	M.RESISTOR CH 1/16W 100	1	
R8056		ERJ3GEYJ103	M.RESISTOR CH 1/16W 10K	1	
R8057		ERJ3GEYJ101	M.RESISTOR CH 1/16W 100	1	
R8057		ERJ3GEYJ101	M.RESISTOR CH 1/16W 100	1	
R8057		ERJ3GEYJ103	M.RESISTOR CH 1/16W 10K	1	
R8058		ERJ3GEYJ101	M.RESISTOR CH 1/16W 100	1	
R8058		ERJ3GEYJ101	M.RESISTOR CH 1/16W 100	1	
R8058		ERJ3GEYJ103	M.RESISTOR CH 1/16W 10K	1	
R8059		ERJ3GEYJ101	M.RESISTOR CH 1/16W 100	1	
R8059		ERJ3GEYJ101	M.RESISTOR CH 1/16W 100	1	
R8059		ERJ3GEYJ103	M.RESISTOR CH 1/16W 10K	1	
R8060		ERJ3GEYJ101	M.RESISTOR CH 1/16W 100	1	
R8060		ERJ3GEYJ101	M.RESISTOR CH 1/16W 100	1	
R8060		ERJ3GEYJ103	M.RESISTOR CH 1/16W 10K	1	
R8061		ERJ3GEYJ101	M.RESISTOR CH 1/16W 100	1	
R8061		ERJ3GEYJ101	M.RESISTOR CH 1/16W 100	1	
R8061		ERJ3GEY0R00	M.RESISTOR CH 1/16W 0	1	
R8062		ERJ3GEYJ101	M.RESISTOR CH 1/16W 100	1	
R8062		ERJ3GEYJ101	M.RESISTOR CH 1/16W 100	1	
R8062		ERJ3GEY0R00	M.RESISTOR CH 1/16W 0	1	
R8063		ERJ3GEYJ101	M.RESISTOR CH 1/16W 100	1	
R8063		ERJ3GEYJ101	M.RESISTOR CH 1/16W 100	1	
R8063		ERJ3GEY0R00	M.RESISTOR CH 1/16W 0	1	
R8064		ERJ3GEYJ103	M.RESISTOR CH 1/16W 10K	1	
R8064		ERJ3GEY0R00	M.RESISTOR CH 1/16W 0	1	
R8065		ERJ3GEYJ101	M.RESISTOR CH 1/16W 100	1	
R8065		ERJ3GEY0R00	M.RESISTOR CH 1/16W 0	1	
R8066		ERJ3GEYJ101	M.RESISTOR CH 1/16W 100	1	
R8066		ERJ3GEYJ102	M.RESISTOR CH 1/16W 1K	1	
R8066		ERJ3GEYJ331	M.RESISTOR CH 1/16W 330	1	
R8067		ERJ3GEYJ103	M.RESISTOR CH 1/16W 10K	1	
R8068,69		ERJ3GEYJ101	M.RESISTOR CH 1/16W 100	2	
R8069		ERJ3GEYJ102	M.RESISTOR CH 1/16W 1K	1	
R8070		ERJ3GEYJ101	M.RESISTOR CH 1/16W 100	1	
R8070		ERJ3GEYJ102	M.RESISTOR CH 1/16W 1K	1	
R8070		ERJ3GEYJ560	M.RESISTOR CH 1/16W 56	1	
R8071		ERJ3GEYJ103	M.RESISTOR CH 1/16W 10K	1	
R8071		ERJ3GEYJ560	M.RESISTOR CH 1/16W 56	1	
R8072		ERJ3GEY0R00	M.RESISTOR CH 1/16W 0	1	
R8080-92		ERJ3GEYJ221	M.RESISTOR CH 1/16W 220	13	
R8100-17		ERJ3GEYJ471	M.RESISTOR CH 1/16W 470	18	
R8118-25		ERJ3GEYJ101	M.RESISTOR CH 1/16W 100	8	
R8126,27		ERJ3GEYJ471	M.RESISTOR CH 1/16W 470	2	
R8129,30		ERJ3GEYJ471	M.RESISTOR CH 1/16W 470	2	
R8132-38		ERJ3GEYJ101	M.RESISTOR CH 1/16W 100	7	
R8139-46		ERJ3GEYJ471	M.RESISTOR CH 1/16W 470	8	
R8147-51		ERJ3GEYJ101	M.RESISTOR CH 1/16W 100	5	
R8152-59		ERJ3GEYJ102	M.RESISTOR CH 1/16W 1K	8	
R8160		ERJ3GEYJ101	M.RESISTOR CH 1/16W 100	1	
R8161,62		ERJ3GEYJ102	M.RESISTOR CH 1/16W 1K	2	
R8163		ERJ3GEYJ101	M.RESISTOR CH 1/16W 100	1	
R8167		ERJ3GEY0R00	M.RESISTOR CH 1/16W 0	1	
R8172		ERJ3GEYJ101	M.RESISTOR CH 1/16W 100	1	
R8173-78		ERJ3GEYJ330	M.RESISTOR CH 1/16W 33	6	
R8180-99		ERJ3GEYJ330	M.RESISTOR CH 1/16W 33	20	
R8201		ERJ3GEYJ471	M.RESISTOR CH 1/16W 470	1	
R8202-17		ERJ3GEYJ152	M.RESISTOR CH 1/16W 1.5K	16	
R8218-25		ERJ3GEYJ332	M.RESISTOR CH 1/16W 3.3K	8	
R8280		VRE0034E121	M.RESISTOR CH 1/10W 120	1	
R8281		VRE0034E750	M.RESISTOR CH 1/10W 75	1	
R8300-41		ERJ3GEYJ102	M.RESISTOR CH 1/16W 1K	42	
R8343-18		ERJ3GEYJ102	M.RESISTOR CH 1/16W 1K	76	
R8419		ERJ3GEYJ100	M.RESISTOR CH 1/16W 10	1	
R8420,21		ERJ3GEYJ560	M.RESISTOR CH 1/16W 56	2	
R8422-25		ERJ3GEYJ471	M.RESISTOR CH 1/16W 470	4	
R8426,27		ERJ3GEYJ560	M.RESISTOR CH 1/16W 56	2	
R8429,30		ERJ3GEYJ560	M.RESISTOR CH 1/16W 56	2	
R8431-34		ERJ3GEYJ471	M.RESISTOR CH 1/16W 470	4	
R8435,36		ERJ3GEYJ560	M.RESISTOR CH 1/16W 56	2	
R8500,01		ERJ3GEYJ102	M.RESISTOR CH 1/16W 1K	2	
R8502,03		ERJ3GEYJ100	M.RESISTOR CH 1/16W 10	2	
R8504-22		ERJ3GEYJ102	M.RESISTOR CH 1/16W 1K	19	
R8524,25		ERJ3GEYJ102	M.RESISTOR CH 1/16W 1K	2	
R8527		ERJ3GEY0R00	M.RESISTOR CH 1/16W 0	1	

Ref.No.		Part No.	Part Name & Description	Pcs	Remarks
R8528-31		ERJ3GEYJ102	M.RESISTOR CH 1/16W 1K	4	
R8533-49		ERJ3GEYJ102	M.RESISTOR CH 1/16W 1K	17	
R8555		ERJ3GEYJ101	M.RESISTOR CH 1/16W 100	1	
R8556,57		ERJ3GEYJ102	M.RESISTOR CH 1/16W 1K	2	
R8558		ERJ3GEYJ101	M.RESISTOR CH 1/16W 100	1	
R8564-66		ERJ3GEY0R00	M.RESISTOR CH 1/16W 0	3	
R8567		ERJ3GEYJ101	M.RESISTOR CH 1/16W 100	1	
R8568		ERJ3GEYJ105	M.RESISTOR CH 1/16W 1M	1	
R8569		ERJ3GEYJ333	M.RESISTOR CH 1/16W 33K	1	
R8570		ERJ3GEYJ104	M.RESISTOR CH 1/16W 100K	1	
R8571		ERJ3GEYJ823	M.RESISTOR CH 1/16W 82K	1	
R8572		ERJ3GEYJ333	M.RESISTOR CH 1/16W 33K	1	
R8573		ERJ3GEYJ122	M.RESISTOR CH 1/16W 1.2K	1	
R8574		VRE0034E101	M.RESISTOR CH 1/10W 100	1	
R8575		VRE0034E391	M.RESISTOR CH 1/10W 390	1	
R8576		VRE0034E103	M.RESISTOR CH 1/10W 10K	1	
R8577		VRE0034E183	M.RESISTOR CH 1/10W 18K	1	
R8578		VRE0034E821	M.RESISTOR CH 1/10W 820	1	
R8579		VRE0034E512	M.RESISTOR CH 1/10W 5.1K	1	
R8580		VRE0034E681	M.RESISTOR CH 1/10W 680	1	
R8581		ERJ3GEYJ333	M.RESISTOR CH 1/16W 33K	1	
R8582,83		VRE0034E622	M.RESISTOR CH 1/10W 6.2K	2	
R8584,85		VRE0034E822	M.RESISTOR CH 1/10W 8.2K	2	
R8586		ERJ3GEYJ101	M.RESISTOR CH 1/16W 100	1	
R8587,88		ERJ3GEYJ102	M.RESISTOR CH 1/16W 1K	2	
R8589		ERJ3GEYJ101	M.RESISTOR CH 1/16W 100	1	
R8590		ERJ3GEYJ102	M.RESISTOR CH 1/16W 1K	1	
R8591,92		ERJ3GEYJ332	M.RESISTOR CH 1/16W 3.3K	2	
R8593		ERJ3GEYJ101	M.RESISTOR CH 1/16W 100	1	
R8594,95		ERJ3GEYJ473	M.RESISTOR CH 1/16W 47K	2	
R8596		ERJ3GEYJ223	M.RESISTOR CH 1/16W 22K	1	
R8597		ERJ3GEYJ183	M.RESISTOR CH 1/16W 18K	1	
R8598		ERJ3GEYJ473	M.RESISTOR CH 1/16W 47K	1	
R8599		ERJ3GEYJ102	M.RESISTOR CH 1/16W 1K	1	
R8600		ERJ3GEYJ105	M.RESISTOR CH 1/16W 1M	1	
R8601		ERJ3GEYJ273	M.RESISTOR CH 1/16W 27K	1	
R8602		ERJ3GEYJ823	M.RESISTOR CH 1/16W 82K	1	
R8603		ERJ3GEYJ333	M.RESISTOR CH 1/16W 33K	1	
R8604		ERJ3GEYJ821	M.RESISTOR CH 1/16W 820	1	
R8605		ERJ3GEYJ152	M.RESISTOR CH 1/16W 1.5K	1	
R8606		ERJ3GEYJ102	M.RESISTOR CH 1/16W 1K	1	
R8607		ERJ3GEYJ103	M.RESISTOR CH 1/16W 10K	1	
R8608		ERJ3GEYJ222	M.RESISTOR CH 1/16W 2.2K	1	
R8610		ERJ3GEYJ101	M.RESISTOR CH 1/16W 100	1	
R8613		ERJ3GEYJ101	M.RESISTOR CH 1/16W 100	1	
R8616,17		ERJ3GEYJ101	M.RESISTOR CH 1/16W 100	2	
R8619-29		ERJ3GEYJ102	M.RESISTOR CH 1/16W 1K	11	
R8630		ERJ3GEYJ103	M.RESISTOR CH 1/16W 10K	1	
R8631		ERJ3GEYJ102	M.RESISTOR CH 1/16W 1K	1	
R8632		ERJ3GEYJ100	M.RESISTOR CH 1/16W 10	1	
R8633		ERJ3GEYJ102	M.RESISTOR CH 1/16W 1K	1	
R8634		ERJ3GEYJ681	M.RESISTOR CH 1/16W 680	1	
R8635		ERJ3GEYJ101	M.RESISTOR CH 1/16W 100	1	
R8636		ERJ3GEYJ332	M.RESISTOR CH 1/16W 3.3K	1	
R8637,38		ERJ3GEYJ562	M.RESISTOR CH 1/16W 5.6K	2	
R8639		ERJ3GEYJ101	M.RESISTOR CH 1/16W 100	1	
R8640,41		ERJ3GEYJ103	M.RESISTOR CH 1/16W 10K	2	
R8642		ERJ3GEYJ273	M.RESISTOR CH 1/16W 27K	1	
R8643		ERJ3GEYJ102	M.RESISTOR CH 1/16W 1K	1	
R8644		ERJ3GEYJ333	M.RESISTOR CH 1/16W 33K	1	
R8645		ERJ3GEYJ184	M.RESISTOR CH 1/16W 180K	1	
R8646,47		ERJ3GEYJ222	M.RESISTOR CH 1/16W 2.2K	2	
R8648		ERJ3GEYJ560	M.RESISTOR CH 1/16W 56	1	
R8649		ERJ3GEYJ104	M.RESISTOR CH 1/16W 100K	1	
R8650		ERJ3GEYJ684	M.RESISTOR CH 1/16W 680K	1	
R8651		ERJ3GEYJ103	M.RESISTOR CH 1/16W 10K	1	
R8652,53		ERJ3GEYJ822	M.RESISTOR CH 1/16W 8.2K	2	
R8654,55		ERJ3GEYJ221	M.RESISTOR CH 1/16W 220	2	
R8656		ERJ3GEYJ332	M.RESISTOR CH 1/16W 3.3K	1	
R8657		ERJ3GEYJ102	M.RESISTOR CH 1/16W 1K	1	
R8658-60		ERJ3GEYJ222	M.RESISTOR CH 1/16W 2.2K	3	
R8662,63		ERJ3GEYJ102	M.RESISTOR CH 1/16W 1K	2	
R8680-88		ERJ3GEYJ221	M.RESISTOR CH 1/16W 220	9	
R8750		ERJ3GEYJ103	M.RESISTOR CH 1/16W 10K	1	
R8751-54		ERJ3GEYJ101	M.RESISTOR CH 1/16W 100	4	

Ref.No.	Part No.	Part Name & Description	Pcs	Remarks
R8755	ERJ3GEYJ103	M.RESISTOR CH 1/16W 10K	1	
R8756-60	ERJ3GEYJ102	M.RESISTOR CH 1/16W 1K	5	
R8761-64	ERJ3GEYJ101	M.RESISTOR CH 1/16W 100	4	
R8770-94	ERJ6GEYOR00	M.RESISTOR CH 1/10W 0	25	
R8795	ERJ3GEYJ102	M.RESISTOR CH 1/16W 1K	1	
R8797	ERJ6GEYOR00	M.RESISTOR CH 1/10W 0	1	
R8799	ERJ6GEYOR00	M.RESISTOR CH 1/10W 0	1	
R8801	ERJ3GEYJ101	M.RESISTOR CH 1/16W 100	1	
R8803-09	ERJ3GEYJ103	M.RESISTOR CH 1/16W 10K	7	
R8810	ERJ3GEYJ102	M.RESISTOR CH 1/16W 1K	1	
R8811-16	ERJ3GEYJ101	M.RESISTOR CH 1/16W 100	6	
R8817,18	ERJ3GEYJ102	M.RESISTOR CH 1/16W 1K	2	
R8819	ERJ3GEYJ101	M.RESISTOR CH 1/16W 100	1	
R8820	ERJ3GEYJ103	M.RESISTOR CH 1/16W 10K	1	
R8821	ERJ3GEYJ105	M.RESISTOR CH 1/16W 1M	1	
R8822	ERJ3GEYJ101	M.RESISTOR CH 1/16W 100	1	
R8823	ERJ3GEYJ103	M.RESISTOR CH 1/16W 10K	1	
R8824	ERJ3GEYJ102	M.RESISTOR CH 1/16W 1K	1	
R8825,26	ERJ3GEYJ332	M.RESISTOR CH 1/16W 3.3K	2	
R8827-34	ERJ3GEYJ103	M.RESISTOR CH 1/16W 10K	8	
R8835-40	ERJ3GEYJ101	M.RESISTOR CH 1/16W 100	6	
R8841,42	ERJ3GEYJ102	M.RESISTOR CH 1/16W 1K	2	
R8843	ERJ3GEYJ103	M.RESISTOR CH 1/16W 10K	1	
R8844	ERJ3GEYJ105	M.RESISTOR CH 1/16W 1M	1	
R8845	ERJ3GEYJ101	M.RESISTOR CH 1/16W 100	1	
R8846	ERJ3GEYJ103	M.RESISTOR CH 1/16W 10K	1	
R8847	ERJ3GEYJ102	M.RESISTOR CH 1/16W 1K	1	
R8848	ERJ3GEYJ101	M.RESISTOR CH 1/16W 100	1	
R8849,50	ERJ3GEYJ332	M.RESISTOR CH 1/16W 3.3K	2	
R8851,52	ERJ3GEYJ101	M.RESISTOR CH 1/16W 100	2	
R8853	ERJ3GEYJ102	M.RESISTOR CH 1/16W 1K	1	
R8855	ERJ3GEYJ102	M.RESISTOR CH 1/16W 1K	1	
R8857	ERJ3GEYJ101	M.RESISTOR CH 1/16W 100	1	
R8859	ERJ3GEYJ102	M.RESISTOR CH 1/16W 1K	1	
R8861	ERJ3GEYJ101	M.RESISTOR CH 1/16W 100	1	
R8862-67	ERJ3GEYJ471	M.RESISTOR CH 1/16W 470	6	
R8868	ERJ3GEYJ103	M.RESISTOR CH 1/16W 10K	1	
R8869	ERJ3GEYJ334	M.RESISTOR CH 1/16W 330K	1	
R8871	ERJ3GEYJ334	M.RESISTOR CH 1/16W 330K	1	
R8872-75	ERJ3GEYJ103	M.RESISTOR CH 1/16W 10K	4	
R8876	ERJ3GEYJ824	M.RESISTOR CH 1/16W 820K	1	
R8877-79	ERJ3GEYJ103	M.RESISTOR CH 1/16W 10K	3	
R8880-82	ERJ3GEYJ101	M.RESISTOR CH 1/16W 100	3	
R8883-85	ERJ3GEYJ102	M.RESISTOR CH 1/16W 1K	3	
R8886	ERJ3GEYJ562	M.RESISTOR CH 1/16W 5.6K	1	
R8887,88	ERJ3GEYJ392	M.RESISTOR CH 1/16W 3.9K	2	
R8889-91	ERJ3GEYJ152	M.RESISTOR CH 1/16W 1.5K	3	
R8892	ERJ3GEYJ102	M.RESISTOR CH 1/16W 1K	1	
R8893	ERJ3GEYJ101	M.RESISTOR CH 1/16W 100	1	
R8894	ERJ3GEYJ102	M.RESISTOR CH 1/16W 1K	1	
R8896-06	ERJ3GEYJ103	M.RESISTOR CH 1/16W 10K	11	
R8908-11	ERJ3GEYJ102	M.RESISTOR CH 1/16W 1K	4	
R8912	ERJ3GEYJ101	M.RESISTOR CH 1/16W 100	1	
R8913-15	ERJ3GEYJ103	M.RESISTOR CH 1/16W 10K	3	
R8916	ERJ3GEYJ101	M.RESISTOR CH 1/16W 100	1	
R8917	ERJ3GEYOR00	M.RESISTOR CH 1/16W 0	1	
R8919	ERJ3GEYOR00	M.RESISTOR CH 1/16W 0	1	
R8921	ERJ3GEYOR00	M.RESISTOR CH 1/16W 0	1	
R8923	ERJ3GEYJ103	M.RESISTOR CH 1/16W 10K	1	
R8924	ERJ3GEYJ101	M.RESISTOR CH 1/16W 100	1	
R8925-32	ERJ3GEYJ103	M.RESISTOR CH 1/16W 10K	8	
R8933	ERJ3GEYJ101	M.RESISTOR CH 1/16W 100	1	
R8934-36	ERJ3GEYJ103	M.RESISTOR CH 1/16W 10K	3	
R8937-39	ERJ3GEYJ101	M.RESISTOR CH 1/16W 100	3	
R8940,41	ERJ3GEYJ103	M.RESISTOR CH 1/16W 10K	2	
R8943	ERJ3GEYJ103	M.RESISTOR CH 1/16W 10K	1	
R8945	ERJ3GEYJ103	M.RESISTOR CH 1/16W 10K	1	
R8947,48	ERJ3GEYJ472	M.RESISTOR CH 1/16W 4.7K	2	
R8949-52	ERJ3GEYJ101	M.RESISTOR CH 1/16W 100	4	
R8953	ERJ3GEYJ223	M.RESISTOR CH 1/16W 22K	1	
R8954,55	ERJ3GEYJ823	M.RESISTOR CH 1/16W 82K	2	
R8956	ERJ3GEYJ183	M.RESISTOR CH 1/16W 18K	1	
R8957	ERJ3GEYJ823	M.RESISTOR CH 1/16W 82K	1	
R8958	ERJ3GEYJ101	M.RESISTOR CH 1/16W 100	1	
R8959	ERJ3GEYJ123	M.RESISTOR CH 1/16W 12K	1	

Ref.No.	Part No.	Part Name & Description	Pcs	Remarks
R8960	ERJ3GEYJ152	M.RESISTOR CH 1/16W 1.5K	1	
R8961	ERJ3GEYJ393	M.RESISTOR CH 1/16W 39K	1	
R8962	ERJ3GYJ103	M.RESISTOR CH 1/16W 10K	1	
R8963,64	ERJ3GEYJ101	M.RESISTOR CH 1/16W 100	2	
R8965-69	ERJ3GEYJ103	M.RESISTOR CH 1/16W 10K	5	
R8970	ERJ3GEYJ102	M.RESISTOR CH 1/16W 1K	1	
R8971	ERJ3GEYJ103	M.RESISTOR CH 1/16W 10K	1	
R8972	ERJ3GEYJ511	M.RESISTOR CH 3W 510	1	
R8973	ERJ3GEYJ222	M.RESISTOR CH 1/16W 2.2K	1	
R8974	ERJ3GEYJ511	M.RESISTOR CH 3W 510	1	
R8975	ERJ3GEYJ222	M.RESISTOR CH 1/16W 2.2K	1	
R8976,77	ERJ3GEYJ103	M.RESISTOR CH 1/16W 10K	2	
R8978-96	ERJ6GEYOR00	M.RESISTOR CH 1/10W 0	19	
R8997-99	ERJ3GEYJ103	M.RESISTOR CH 1/16W 10K	3	
SW8001,02	VSS0367-08B	SWITCH	2	
SW8003,04	VSS0367-04B	SWITCH	2	
SW8801,02	VSS0367-08B	SWITCH	2	
SW8805,06	VSS0367-06B	SWITCH	2	
TP8001-04	VJR0548	JACK PLATE	4	
TP8004,05	VJR0548	JACK PLATE	2	
TP8005,06	VJR0548	JACK PLATE	2	
TP8006,07	VJR0548	JACK PLATE	2	
TP8007,08	VJR0548	JACK PLATE	2	
TP8008,09	VJR0548	JACK PLATE	2	
TP8009,10	VJR0548	JACK PLATE	2	
TP8010,11	VJR0548	JACK PLATE	2	
TP8011,12	VJR0548	JACK PLATE	2	
TP8012-16	VJR0548	JACK PLATE	5	
TP8016,17	VJR0548	JACK PLATE	2	
TP8017,18	VJR0548	JACK PLATE	2	
TP8018,19	VJR0548	JACK PLATE	2	
TP8019,20	VJR0548	JACK PLATE	2	
TP8020,21	VJR0548	JACK PLATE	2	
TP8021-32	VJR0548	JACK PLATE	12	
TP8040-42	VJR0548	JACK PLATE	3	
TP8300-03	VJR0548	JACK PLATE	4	
TP8303,04	VJR0548	JACK PLATE	2	
TP8304,05	VJR0548	JACK PLATE	2	
TP8305,06	VJR0548	JACK PLATE	2	
TP8306,07	VJR0548	JACK PLATE	2	
TP8307,08	VJR0548	JACK PLATE	2	
TP8312-16	VJR0548	JACK PLATE	5	
TP8320-25	VJR0548	JACK PLATE	6	
TP8325-28	VJR0548	JACK PLATE	4	
TP8330-32	VJR0548	JACK PLATE	3	
TP8350-53	VJR0548	JACK PLATE	4	
TP8360-63	VJR0548	JACK PLATE	4	
TP8524	VJR0548	JACK PLATE	1	
TP8526	VJR0548	JACK PLATE	1	
TP8531	VJR0646	TEST POINT	1	
TP8538,39	VJR0646	TEST POINT	2	
TP8540	VJR0548	JACK PLATE	1	
TP8541-43	VJR0646	TEST POINT	3	
TP8547	VJR0646	TEST POINT	1	
TP8551	VJR0548	JACK PLATE	1	
TP8552	VJR0646	TEST POINT	1	
TP8801-03	VJR0646	TEST POINT	3	
TP8806-08	VJR0646	TEST POINT	3	
TP8812-17	VJR0646	TEST POINT	6	
TP8818-21	VJR0548	JACK PLATE	4	
TP8822-26	VJR0646	TEST POINT	5	
TP8827,28	VJR0548	JACK PLATE	2	
TP8829-34	VJR0646	TEST POINT	6	
TP8835-39	VJR0548	JACK PLATE	5	
TP8840	VJR0646	TEST POINT	1	
TP8841-45	VJR0548	JACK PLATE	5	
TP8846,47	VJR0646	TEST POINT	2	
TPG8001	VJR0548	JACK PLATE	1	
TPG8001	VJR0548	JACK PLATE	1	

Ref.No.		Part No.	Part Name & Description	Pcs	Remarks
TPG8001		VJR0646	TEST POINT	1	
TPG8002		VJR0548	JACK PLATE	1	
TPG8002		VJR0548	JACK PLATE	1	
TPG8002		VJR0646	TEST POINT	1	
TPG8003		VJR0548	JACK PLATE	1	
TPG8003		VJR0548	JACK PLATE	1	
TPG8003		VJR0646	TEST POINT	1	
TPG8004		VJR0548	JACK PLATE	1	
TPG8005		VJR0646	TEST POINT	1	
TPG8550		VJR0646	TEST POINT	1	
VC8500		ECV1ZW20X53T	V.CAPACITOR 20P	1	
VR8500		VRV0064B203	V.RESISTOR 20K	1	
VR8501,02		VRV0064B502	V.RESISTOR 5K	2	
VR8805		VRV0109B103	V.RESISTOR 10K	1	
VR8806		VRV0109B502	V.RESISTOR 5K	1	
X8008		VSX0468	IC	1	
X8500		VSX0334	CRYSTAL OSCILLATOR	1	
X8501		VSX0081	CRYSTAL OSCILLATOR	1	
X8804,05		VSX0392	IC	2	
X8838		VSX0450	IC	1	
X8839		VSX0392	IC	1	
X8840		VSX0391	IC	1	
			MISCELLANEOUS		
		VMB1498	CARD PULLER PIN	2	
		VML1655	LEVERARM	2	
		VMS4925	PIN	2	
		VMX2020	SPACER	3	
		VXA5039	P.C.BOARD SHIELD PLATE	1	
		XTV3+6FFR	SCREW	7	
		XYN3+K6RS	SCREW	10	

SO DRIVE VEP82092A

Ref.No.		Part No.	Part Name & Description	Pcs	Remarks
SO	■	VEP82092A	P.C.BOARD W/COMPONENT		
			DRIVE		
			CAPACITORS		
C2001-03		ECA1HXS010	E.CAPACITOR 50V 1U	3	
C2004		ECA1AXS680	E.CAPACITOR 10V 68U	1	
C2005,06		ECA1HXS010	E.CAPACITOR 50V 1U	2	
C2007		ECA1HXLV101X	E.CAPACITOR 50V 100P	1	
C2008		ECUM1H1032FN	C.CAPACITOR CH 50V 0.01U	1	
C2009-11		ECUM1H333KBN	C.CAPACITOR CH 50V 0.033U	3	
C2012,13		ECUM1E104KBN	C.CAPACITOR 25V 0.1U	2	
C2014		ECUM1H681JCN	C.CAPACITOR CH 50V 680P	1	
C2016		ECUM1H102KBN	C.CAPACITOR CH 50V 1000P	1	
C2051-53		ECA1HXS4R7	E.CAPACITOR 50V 4.7U	3	
C2054		ECA1AXS680	E.CAPACITOR 10V 68U	1	
C2055,56		ECA1HXS010	E.CAPACITOR 50V 1U	2	
C2057		ECA1HXLV101X	E.CAPACITOR 50V 100P	1	
C2058		ECUM1H1032FN	C.CAPACITOR CH 50V 0.01U	1	
C2059-61		ECUM1H333KBN	C.CAPACITOR CH 50V 0.033U	3	
C2062,63		ECUM1E104KBN	C.CAPACITOR 25V 0.1U	2	
C2064		ECUM1H681JCN	C.CAPACITOR CH 50V 680P	1	
C2065		ECUM1H1032FN	C.CAPACITOR CH 50V 0.01U	1	
C2066		ECUM1H102KBN	C.CAPACITOR CH 50V 1000P	1	
C2101-03		ECA1HXS4R7	E.CAPACITOR 50V 4.7U	3	
C2104		ECA1AXS680	E.CAPACITOR 10V 68U	1	
C2105,06		ECA1HXS010	E.CAPACITOR 50V 1U	2	
C2107		ECA1HXLV101X	E.CAPACITOR 50V 100P	1	
C2108		ECUM1H1032FN	C.CAPACITOR CH 50V 0.01U	1	
C2109-11		ECUM1H333KBN	C.CAPACITOR CH 50V 0.033U	3	
C2112,13		ECUM1E104KBN	C.CAPACITOR 25V 0.1U	2	
C2114		ECUM1H681JCN	C.CAPACITOR CH 50V 680P	1	
C2115		ECUM1H1032FN	C.CAPACITOR CH 50V 0.01U	1	
C2116		ECUM1H102KBN	C.CAPACITOR CH 50V 1000P	1	
C2151-53		ECA1HXS4R7	E.CAPACITOR 50V 4.7U	3	
C2154		ECA1AXS680	E.CAPACITOR 10V 68U	1	
C2155,56		ECA1HXS010	E.CAPACITOR 50V 1U	2	
C2157		ECA1HXLV101X	E.CAPACITOR 50V 100P	1	
C2158		ECUM1H1032FN	C.CAPACITOR CH 50V 0.01U	1	
C2159-61		ECUM1H333KBN	C.CAPACITOR CH 50V 0.033U	3	
C2162,63		ECUM1E104KBN	C.CAPACITOR 25V 0.1U	2	
C2164		ECUM1H681JCN	C.CAPACITOR CH 50V 680P	1	
C2166		ECUM1H102KBN	C.CAPACITOR CH 50V 1000P	1	
C2201-05		ECEV1HNR22	E.CAPACITOR 50V 0.22U	5	
C2206-09		ECUM1H1032FN	C.CAPACITOR CH 50V 0.01U	4	
C2230,31		ECA1HXKN2R2	E.CAPACITOR 50V 2.2U	2	
C2232		ECA1HXLV470X	E.CAPACITOR 50V 47P	1	
C2233,34		ECUM1H1032FN	C.CAPACITOR CH 50V 0.01U	2	
C2251		ECA1HXKN2R2	E.CAPACITOR 50V 2.2U	1	
C2281		ECA1CXS470	E.CAPACITOR 16V 47U	1	
C2282,83		ECA1HXLV101X	E.CAPACITOR 50V 100P	2	
C2284		ECA1HXLV470X	E.CAPACITOR 50V 47P	1	
C2285		ECA1HXLV101X	E.CAPACITOR 50V 100P	1	
C2286		ECA1CXS470	E.CAPACITOR 16V 47U	1	
C2290-97		ECUM1H1032FN	C.CAPACITOR CH 50V 0.01U	8	
C2301		ECA1AXS680	E.CAPACITOR 10V 68U	1	
C2302		ECQB1H104JF	P.CAPACITOR 50V 0.1U	1	
C2303-29		ECUM1H1032FN	C.CAPACITOR CH 50V 0.01U	27	
C2401-20		ECUM1H1032FN	C.CAPACITOR CH 50V 0.01U	20	
C2501		ECA1HXLV470X	E.CAPACITOR 50V 47P	1	
C2502		ECUM1H1032FN	C.CAPACITOR CH 50V 0.01U	1	
C2503		ECQB1H224JF	P.CAPACITOR 50V 0.22U	1	
C2504,05		ECUM1H1032FN	C.CAPACITOR CH 50V 0.01U	2	
C2506,07		ECUM1H223KBN	C.CAPACITOR CH 50V 0.022U	2	
C2508-10		ECUM1H1032FN	C.CAPACITOR CH 50V 0.01U	3	
D2001		MA151WK	DIODE	1	
D2002-07		10E1	DIODE	6	

Ref.No.		Part No.	Part Name & Description	Pcs	Remarks
D2008-11		MA151K	DIODE	4	
D2012		31DQ06	DIODE	1	
D2013		MA151K	DIODE	1	
D2051		MA151WK	DIODE	1	
D2052-57		10E1	DIODE	6	
D2058-61		MA151K	DIODE	4	
D2062		31DQ06	DIODE	1	
D2063		MA151K	DIODE	1	
D2101		MA151WK	DIODE	1	
D2102-07		10E1	DIODE	6	
D2108-11		MA151K	DIODE	4	
D2112		31DQ06	DIODE	1	
D2113		MA151K	DIODE	1	
D2151		MA151WK	DIODE	1	
D2152-57		10E1	DIODE	6	
D2158-61		MA151K	DIODE	4	
D2162		31DQ06	DIODE	1	
D2163		MA151K	DIODE	1	
D2230		MA153	DIODE	1	
D2251		MA3100-M	DIODE	1	
D2601-04		MA153	DIODE	4	
FL2301		VLF0576	FILTER	1	
IC2001		AN3891FBP	IC	1	
IC2002		NJM4558M	IC	1	
IC2003		MC14053BF	IC	1	(R)
IC2004		NJM2903M	IC	1	
IC2051		STA322A	TRANSISTOR	1	
IC2052		STA311A	TRANSISTOR	1	
IC2053		AN3891FBP	IC	1	
IC2101		AN3891FBP	IC	1	
IC2102		NJM4558M	IC	1	
IC2103		MC14053BF	IC	1	(R)
IC2104		NJM2903M	IC	1	
IC2151		AN3891FBP	IC	1	
IC2201-03		PU4124	IC	3	
IC2204-06		MC14538BF	IC	3	
IC2207,08		MC14081BF	IC	2	
IC2209,10		MC14050BF	IC	2	
IC2231		BA6238AU2M	IC	1	
IC2232		NJM2904M	IC	1	
IC2251		BA6238AU2M	IC	1	
IC2281,82		AN7805F	IC	2	
IC2301		MC74HC27F	IC	1	
IC2302		MC74HC175F	IC	1	
IC2303		MC74HC164F	IC	1	
IC2304		MC74HC04AF	IC	1	
IC2305-07		MC14094BF	IC	3	
IC2308		MC14050BF	IC	1	
IC2309-12		MC14021BF	IC	4	
IC2313		NJM2901M	IC	1	
IC2501		NJM78L12UA	IC	1	
IC2502		AN7815	IC	1	
IC2503		AN6609NS	IC	1	
IC2505		MC74HC74AF	IC	1	
IC2508		NJM4558M	IC	1	
IC2510		NJM2903M	IC	1	
L2001		VLQ0497	COIL	1	
L2051		VLQ0497	COIL	1	
L2101		VLQ0497	COIL	1	
L2151		VLQ0497	COIL	1	
P2001,02		VJP3454B096	CONNECTOR (MALE)	2	

S

Ref.No.	Part No.	Part Name & Description	Pcs	Remarks
Q2001-03	2SA1567-Y	TRANSISTOR	3	
Q2004	2SA1309A-R	TRANSISTOR	1	
Q2005	2SB944-Q	TRANSISTOR	1	
Q2006-08	2SC4064-Y	TRANSISTOR	3	
Q2009-11	2SC1384-R	TRANSISTOR	3	
Q2012	2SC1847-R	TRANSISTOR	1	(Q,R)
Q2051	2SA1309A-R	TRANSISTOR	1	
Q2052	2SB944-Q	TRANSISTOR	1	
Q2053-55	2SC1384-R	TRANSISTOR	3	
Q2056	2SC1847-R	TRANSISTOR	1	(Q,R)
Q2101-03	2SA1488-CDE	TRANSISTOR	3	
Q2104	2SA1309A-R	TRANSISTOR	1	
Q2105	2SB944-Q	TRANSISTOR	1	
Q2106-08	2SC3851-CDE	TRANSISTOR	3	
Q2109-11	2SC1384-R	TRANSISTOR	3	
Q2112	2SC1847-R	TRANSISTOR	1	(Q,R)
Q2151-53	2SA1488-CDE	TRANSISTOR	3	
Q2154	2SA1309A-R	TRANSISTOR	1	
Q2155	2SB944-Q	TRANSISTOR	1	
Q2156-58	2SC3851-CDE	TRANSISTOR	3	
Q2159-61	2SC1384-R	TRANSISTOR	3	
Q2162	2SC1847-R	TRANSISTOR	1	(Q,R)
Q2230	2SB943-Q	TRANSISTOR	1	
Q2231	2SB1322A-QR	TRANSISTOR	1	
Q2251	UN2213	TRANSISTOR-RESISTOR	1	
Q2301	2SB710-R	TRANSISTOR CHIP	1	(R)
Q2302	2SD602-R	TRANSISTOR	1	
Q2303	UN2213	TRANSISTOR-RESISTOR	1	
Q2502-04	UN2213	TRANSISTOR-RESISTOR	3	
		RESISTORS		
R2001,02	ERJ6GEYJ101	M.RESISTOR CH 1/10W 100	2	
R2003	ERJ6GEYJ562	M.RESISTOR CH 1/10W 5.6K	1	
R2004	ERX2SJR33	M.RESISTOR 2W 0.33	1	
R2005	ERJ6GEYJ681	M.RESISTOR CH 1/10W 680	1	
R2006	ERJ6GEYJ151	M.RESISTOR CH 1/10W 150	1	
R2007	ERJ6GEYJ333	M.RESISTOR CH 1/10W 33K	1	
R2008	ERJ6GEYJ103	M.RESISTOR CH 1/10W 10K	1	
R2009	ERG2SJ330	M.RESISTOR 2W 33	1	
R2010	ERJ6GEYJ682	M.RESISTOR CH 1/10W 6.8K	1	
R2011	ERJ6GEYJ121	M.RESISTOR CH 1/10W 120	1	
R2012-14	ERJ14YJ680	M.RESISTOR 1/4W 68	3	
R2015	ERJ6GEYJ103	M.RESISTOR CH 1/10W 10K	1	
R2016	ERJ6GEYJ222	M.RESISTOR CH 1/10W 2.2K	1	
R2017	ERJ12YJ560	M.RESISTOR 1/2W 56	1	
R2018	ERJ6GEYJ123	M.RESISTOR CH 1/10W 12K	1	
R2019	ERJ6GEYJ222	M.RESISTOR CH 1/10W 2.2K	1	
R2020	ERJ6GEYJ561	M.RESISTOR CH 1/10W 560	1	
R2021	ERJ6GEYJ222	M.RESISTOR CH 1/10W 2.2K	1	
R2022	ERJ6GEYJ104	M.RESISTOR CH 1/10W 100K	1	
R2023-25	ERJ6GEYJ102	M.RESISTOR CH 1/10W 1K	3	
R2026	ERG2SJ271	M.RESISTOR 2W 270	1	
R2027	ERJ6GEYJ752	M.RESISTOR CH 1/10W 7.5K	1	
R2028	ERJ6GEYJ103	M.RESISTOR CH 1/10W 10K	1	
R2030	ERJ12YJ2R2	M.RESISTOR 1/2W 2.2	1	
R2031	ERJ6GEYJ102	M.RESISTOR CH 1/10W 1K	1	
R2032	ERJ12YJ471	M.RESISTOR 1/2W 470	1	
R2033,34	ERJ6GEYJ102	M.RESISTOR CH 1/10W 1K	2	
R2035	ERJ6GEYJ105	M.RESISTOR CH 1/10W 1M	1	
R2036,37	ERJ6GEYJ103	M.RESISTOR CH 1/10W 10K	2	
R2038	VREO034E103	M.RESISTOR CH 1/10W 10K	1	
R2039	ERJ6GEYJ101	M.RESISTOR CH 1/10W 100	1	
R2040	ERJ6GEYJ472	M.RESISTOR CH 1/10W 4.7K	1	
R2041	VREO034E103	M.RESISTOR CH 1/10W 10K	1	
R2051,52	ERJ6GEYJ331	M.RESISTOR CH 1/10W 330	2	
R2053	ERJ6GEYJ562	M.RESISTOR CH 1/10W 5.6K	1	
R2054	ERX2SJR33	M.RESISTOR 2W 0.33	1	
R2055	ERJ6GEYJ681	M.RESISTOR CH 1/10W 680	1	
R2056	ERJ6GEYJ151	M.RESISTOR CH 1/10W 150	1	
R2057	ERJ6GEYJ333	M.RESISTOR CH 1/10W 33K	1	
R2058	ERJ6GEYJ103	M.RESISTOR CH 1/10W 10K	1	
R2059	ERG2SJ330	M.RESISTOR 2W 33	1	

Ref.No.	Part No.	Part Name & Description	Pcs	Remarks
R2060	ERJ6GEYJ682	M.RESISTOR CH 1/10W 6.8K	1	
R2061	ERJ6GEYJ121	M.RESISTOR CH 1/10W 120	1	
R2062-64	ERJ14YJ680	M.RESISTOR 1/4W 68	3	
R2065	ERJ6GEYJ103	M.RESISTOR CH 1/10W 10K	1	
R2066	ERJ6GEYJ222	M.RESISTOR CH 1/10W 2.2K	1	
R2067	ERJ12YJ560	M.RESISTOR 1/2W 56	1	
R2068	ERJ6GEYJ123	M.RESISTOR CH 1/10W 12K	1	
R2069	ERJ6GEYJ222	M.RESISTOR CH 1/10W 2.2K	1	
R2070	ERJ6GEYJ561	M.RESISTOR CH 1/10W 560	1	
R2071	ERJ6GEYJ222	M.RESISTOR CH 1/10W 2.2K	1	
R2072	ERJ6GEYJ104	M.RESISTOR CH 1/10W 100K	1	
R2073-75	ERJ6GEYJ102	M.RESISTOR CH 1/10W 1K	3	
R2076	ERG2SJ271	M.RESISTOR 2W 270	1	
R2077	ERJ6GEYJ752	M.RESISTOR CH 1/10W 7.5K	1	
R2078	ERJ6GEYJ103	M.RESISTOR CH 1/10W 10K	1	
R2079	ERJ6GEYJ100	M.RESISTOR CH 1/10W 10	1	
R2080	ERJ12YJ2R2	M.RESISTOR 1/2W 2.2	1	
R2081	ERJ6GEYJ102	M.RESISTOR CH 1/10W 1K	1	
R2082	ERJ12YJ471	M.RESISTOR 1/2W 470	1	
R2083,84	ERJ6GEYJ102	M.RESISTOR CH 1/10W 1K	2	
R2085	ERJ6GEYJ105	M.RESISTOR CH 1/10W 1M	1	
R2086,87	ERJ6GEYJ103	M.RESISTOR CH 1/10W 10K	2	
R2088	VREO034E103	M.RESISTOR CH 1/10W 10K	1	
R2089	ERJ6GEYJ101	M.RESISTOR CH 1/10W 100	1	
R2090	ERJ6GEYJ472	M.RESISTOR CH 1/10W 4.7K	1	
R2091	VREO034E103	M.RESISTOR CH 1/10W 10K	1	
R2101,02	ERJ6GEYJ331	M.RESISTOR CH 1/10W 330	2	
R2103	ERJ6GEYJ562	M.RESISTOR CH 1/10W 5.6K	1	
R2104	ERX2SJR33	M.RESISTOR 2W 0.33	1	
R2105	ERJ6GEYJ681	M.RESISTOR CH 1/10W 680	1	
R2106	ERJ6GEYJ151	M.RESISTOR CH 1/10W 150	1	
R2107	ERJ6GEYJ333	M.RESISTOR CH 1/10W 33K	1	
R2108	ERJ6GEYJ103	M.RESISTOR CH 1/10W 10K	1	
R2109	ERG2SJ330	M.RESISTOR 2W 33	1	
R2110	ERJ6GEYJ682	M.RESISTOR CH 1/10W 6.8K	1	
R2111	ERJ6GEYJ121	M.RESISTOR CH 1/10W 120	1	
R2112-14	ERJ14YJ680	M.RESISTOR 1/4W 68	3	
R2115	ERJ6GEYJ103	M.RESISTOR CH 1/10W 10K	1	
R2116	ERJ6GEYJ222	M.RESISTOR CH 1/10W 2.2K	1	
R2117	ERJ12YJ560	M.RESISTOR 1/2W 56	1	
R2118	ERJ6GEYJ123	M.RESISTOR CH 1/10W 12K	1	
R2119	ERJ6GEYJ222	M.RESISTOR CH 1/10W 2.2K	1	
R2120	ERJ6GEYJ561	M.RESISTOR CH 1/10W 560	1	
R2121	ERJ6GEYJ222	M.RESISTOR CH 1/10W 2.2K	1	
R2122	ERJ6GEYJ104	M.RESISTOR CH 1/10W 100K	1	
R2123-25	ERJ6GEYJ102	M.RESISTOR CH 1/10W 1K	3	
R2126	ERG2SJ271	M.RESISTOR 2W 270	1	
R2127	ERJ6GEYJ752	M.RESISTOR CH 1/10W 7.5K	1	
R2128	ERJ6GEYJ103	M.RESISTOR CH 1/10W 10K	1	
R2129	ERJ6GEYJ100	M.RESISTOR CH 1/10W 10	1	
R2130	ERJ12YJ2R2	M.RESISTOR 1/2W 2.2	1	
R2131	ERJ6GEYJ102	M.RESISTOR CH 1/10W 1K	1	
R2132	ERJ12YJ471	M.RESISTOR 1/2W 470	1	
R2133,34	ERJ6GEYJ102	M.RESISTOR CH 1/10W 1K	2	
R2135	ERJ6GEYJ105	M.RESISTOR CH 1/10W 1M	1	
R2136,37	ERJ6GEYJ103	M.RESISTOR CH 1/10W 10K	2	
R2138	VREO034E103	M.RESISTOR CH 1/10W 10K	1	
R2139	ERJ6GEYJ101	M.RESISTOR CH 1/10W 100	1	
R2140	ERJ6GEYJ472	M.RESISTOR CH 1/10W 4.7K	1	
R2141	VREO034E103	M.RESISTOR CH 1/10W 10K	1	
R2151,52	ERJ6GEYJ331	M.RESISTOR CH 1/10W 330	2	
R2153	ERJ6GEYJ562	M.RESISTOR CH 1/10W 5.6K	1	
R2154	ERX2SJR33	M.RESISTOR 2W 0.33	1	
R2155	ERJ6GEYJ681	M.RESISTOR CH 1/10W 680	1	
R2156	ERJ6GEYJ151	M.RESISTOR CH 1/10W 150	1	
R2157	ERJ6GEYJ333	M.RESISTOR CH 1/10W 33K	1	
R2158	ERJ6GEYJ103	M.RESISTOR CH 1/10W 10K	1	
R2159	ERG2SJ330	M.RESISTOR 2W 33	1	
R2160	ERJ6GEYJ682	M.RESISTOR CH 1/10W 6.8K	1	
R2161	ERJ6GEYJ121	M.RESISTOR CH 1/10W 120	1	
R2162-64	ERJ14YJ680	M.RESISTOR 1/4W 68	3	
R2165	ERJ6GEYJ103	M.RESISTOR CH 1/10W 10K	1	
R2166	ERJ6GEYJ222	M.RESISTOR CH 1/10W 2.2K	1	
R2167	ERJ12YJ560	M.RESISTOR 1/2W 56	1	
R2168	ERJ6GEYJ123	M.RESISTOR CH 1/10W 12K	1	

Ref.No.		Part No.	Part Name & Description	Pcs	Remarks
R2169		ERJ6GEYJ222	M.RESISTOR CH 1/10W 2.2K	1	
R2170		ERJ6GEYJ561	M.RESISTOR CH 1/10W 560	1	
R2171		ERJ6GEYJ222	M.RESISTOR CH 1/10W 2.2K	1	
R2172		ERJ6GEYJ104	M.RESISTOR CH 1/10W 100K	1	
R2173-75		ERJ6GEYJ102	M.RESISTOR CH 1/10W 1K	3	
R2176		ERG2SJ271	M.RESISTOR 2W 270	1	
R2177		ERJ6GEYJ752	M.RESISTOR CH 1/10W 7.5K	1	
R2178		ERJ6GEYJ103	M.RESISTOR CH 1/10W 10K	1	
R2180		ERJ12YJ2R2	M.RESISTOR 1/2W 2.2	1	
R2181		ERJ6GEYJ102	M.RESISTOR CH 1/10W 1K	1	
R2182		ERJ12YJ471	M.RESISTOR 1/2W 470	1	
R2183,84		ERJ6GEYJ102	M.RESISTOR CH 1/10W 1K	2	
R2185		ERJ6GEYJ105	M.RESISTOR CH 1/10W 1M	1	
R2186,87		ERJ6GEYJ103	M.RESISTOR CH 1/10W 10K	2	
R2188		VRE0034E103	M.RESISTOR CH 1/10W 10K	1	
R2189		ERJ6GEYJ101	M.RESISTOR CH 1/10W 100	1	
R2190		ERJ6GEYJ472	M.RESISTOR CH 1/10W 4.7K	1	
R2191		VRE0034E103	M.RESISTOR CH 1/10W 10K	1	
R2201-09		ERJ6GEYJ681	M.RESISTOR CH 1/10W 680	9	
R2210		ERJ6GEYJ682	M.RESISTOR CH 1/10W 6.8K	1	
R2211-15		ERJ6GEYJ105	M.RESISTOR CH 1/10W 1M	5	
R2216-21		ERJ6GEYJ104	M.RESISTOR CH 1/10W 100K	6	
R2230		ERJ6GEYJ561	M.RESISTOR CH 1/10W 560	1	
R2231		ERG1SJ101	M.RESISTOR 1W 100	1	
R2232		ERJ6GEYJ183	M.RESISTOR CH 1/10W 18K	1	
R2233		ERJ6GEYJ392	M.RESISTOR CH 1/10W 3.9K	1	
R2234		VRE0034E183	M.RESISTOR CH 1/10W 18K	1	
R2235-37		ERJ6GEYJ103	M.RESISTOR CH 1/10W 10K	3	
R2238		VRE0034E103	M.RESISTOR CH 1/10W 10K	1	
R2239		ERJ6GEYJ103	M.RESISTOR CH 1/10W 10K	1	
R2240-42		ERJ6GEYJ104	M.RESISTOR CH 1/10W 100K	3	
R2243		ERJ6GEYJ561	M.RESISTOR CH 1/10W 560	1	
R2251		ERJ14YJ102	M.RESISTOR 1/4W 1K	1	
R2252-54		ERJ6GEYJ103	M.RESISTOR CH 1/10W 10K	3	
R2255,56		ERJ6GEYJ104	M.RESISTOR CH 1/10W 100K	2	
R2301		ERJ6GEYJ564	M.RESISTOR CH 1/10W 560K	1	
R2302		ERJ6GEYJ220	M.RESISTOR CH 1/10W 22	1	
R2303		ERJ6GEYJ564	M.RESISTOR CH 1/10W 560K	1	
R2304		ERJ6GEYJ474	M.RESISTOR CH 1/10W 470K	1	
R2305		ERJ6GEYJ103	M.RESISTOR CH 1/10W 10K	1	
R2306,07		ERJ6GEYJ222	M.RESISTOR CH 1/10W 2.2K	2	
R2308,09		ERJ6GEYJ333	M.RESISTOR CH 1/10W 33K	2	
R2310		ERJ6GEYJ104	M.RESISTOR CH 1/10W 100K	1	
R2311		ERJ6GEYJ332	M.RESISTOR CH 1/10W 3.3K	1	
R2312,13		ERJ6GEYJ103	M.RESISTOR CH 1/10W 10K	2	
R2314		ERJ6GEYJ222	M.RESISTOR CH 1/10W 2.2K	1	
R2315		ERJ6GEYJ105	M.RESISTOR CH 1/10W 1M	1	
R2316		ERJ6GEYJ103	M.RESISTOR CH 1/10W 10K	1	
R2317-38		ERJ6GEYJ393	M.RESISTOR CH 1/10W 39K	22	
R2339		ERJ6GEYJ474	M.RESISTOR CH 1/10W 470K	1	
R2340		ERJ6GEYJ103	M.RESISTOR CH 1/10W 10K	1	
R2341		ERJ6GEYJ223	M.RESISTOR CH 1/10W 22K	1	
R2342		ERJ6GEYJ103	M.RESISTOR CH 1/10W 10K	1	
R2501		VRE0034E562	M.RESISTOR CH 1/10W 5.6K	1	
R2502		VRE0034E104	M.RESISTOR CH 1/10W 100K	1	
R2503		VRE0034E332	M.RESISTOR CH 1/10W 3.3K	1	
R2504		VRE0034E113	M.RESISTOR CH 1/10W 11K	1	
R2506		VRE0034E153	M.RESISTOR CH 1/10W 15K	1	
R2507		VRE0034E123	M.RESISTOR CH 1/10W 12K	1	
R2508		VRE0034E822	M.RESISTOR CH 1/10W 8.2K	1	
R2509		VRE0034E113	M.RESISTOR CH 1/10W 11K	1	
R2510		VRE0034E822	M.RESISTOR CH 1/10W 8.2K	1	
R2511		ERX2SJR82	M.RESISTOR 2W 0.82	1	
R2512		ERJ6GEYJ272	M.RESISTOR CH 1/10W 2.7K	1	
R2513,14		ERJ6GEY0R00	M.RESISTOR CH 1/10W 0	2	
R2515		ERJ6GEYJ562	M.RESISTOR CH 1/10W 5.6K	1	
R2516,17		ERJ6GEYJ271	M.RESISTOR CH 1/10W 270	2	
R2518-20		ERJ6GEYJ103	M.RESISTOR CH 1/10W 10K	3	
R2521-23		ERJ6GEYJ104	M.RESISTOR CH 1/10W 100K	3	
TP2001		VJR0646	TEST POINT	1	
TP2005		VJR0646	TEST POINT	1	
TP2007,08		VJR0646	TEST POINT	2	

Ref.No.		Part No.	Part Name & Description	Pcs	Remarks
TP2051		VJR0646	TEST POINT	1	
TP2055		VJR0646	TEST POINT	1	
TP2057,58		VJR0646	TEST POINT	2	
TP2101		VJR0646	TEST POINT	1	
TP2105		VJR0646	TEST POINT	1	
TP2107,08		VJR0646	TEST POINT	2	
TP2151		VJR0646	TEST POINT	1	
TP2155		VJR0646	TEST POINT	1	
TP2157,58		VJR0646	TEST POINT	2	
TP2231		VJR0646	TEST POINT	1	
TP2251		VJR0646	TEST POINT	1	
TPG1,G2		VJR0646	TEST POINT	2	
			MISCELLANEOUS		
		VMB2318	CARD PULLER PIN	2	
		VML2143	LEVER. ARM.	1	
		VML2144	LEVER. ARM.	1	
		VSC3823	HEAT SINK	1	
		VSC3888	HEAT SINK	4	
		XNG3B	NUT	16	
		XYN3+F10S	SCREW	1	
		XWA3B	WASHER	8	
		XWG3	NUT	8	
		XYNV3+K6S	SCREW	16	
		XYN3+C6S	SCREW	2	
		XYN3+F14S	SCREW	7	

S1 EQ1 VEP85036A

Ref.No.		Part No.	Part Name & Description	Pcs	Remarks
S1	■	VEP85036A	P.C.BOARD W/COMPONENT		
			EQ1		
			CAPACITORS		
C5001,02		ECA1HXS2R2	E.CAPACITOR 50V 2.2U	2	
C5003,04		ECUX1H271JCV	C.CAPACITOR CH 50V 270P	2	
C5005-16		ECUX1C104ZFV	C.CAPACITOR CH 16V 0.1U	12	
C5017		ECUX1H270JCV	C.CAPACITOR 50V 27P	1	
C5018		ECUX1H103ZFV	C.CAPACITOR CH 50V 0.01U	1	
C5019,20		ECUX1C104ZFV	C.CAPACITOR CH 16V 0.1U	2	
C5021		ECUM1E104KBN	C.CAPACITOR 25V 0.1U	1	
C5023,24		ECUX1C104ZFV	C.CAPACITOR CH 16V 0.1U	2	
C5025		ECUX1H150JCV	C.CAPACITOR 50V 15P	1	
C5026,27		ECUX1C104ZFV	C.CAPACITOR CH 16V 0.1U	2	
C5028		ECUM1E104KBN	C.CAPACITOR 25V 0.1U	1	
C5030		VCM0058C027	M.CAPACITOR V	1	
C5032		VCM0059F047	M.CAPACITOR	1	
C5034		VCM0059F110	M.CAPACITOR	1	
C5036		VCM0060F300	M.CAPACITOR	1	
C5037,38		ECUX1C104ZFV	C.CAPACITOR CH 16V 0.1U	2	
C5039		ECUM1E104KBN	C.CAPACITOR 25V 0.1U	1	
C5042		ECUX1H101JCV	C.CAPACITOR CH 50V 100P	1	
C5043-49		ECUX1C104ZFV	C.CAPACITOR CH 16V 0.1U	7	
C5050		ECUM1E104KBN	C.CAPACITOR 25V 0.1U	1	
C5051-54		ECUX1C104ZFV	C.CAPACITOR CH 16V 0.1U	4	
C5056-59		ECUX1C104ZFV	C.CAPACITOR CH 16V 0.1U	4	
C5060		ECUX1H101JCV	C.CAPACITOR CH 50V 100P	1	
C5061		ECUX1C104ZFV	C.CAPACITOR CH 16V 0.1U	1	
C5062		ECUX1H020CCV	C.CAPACITOR 50V 2P	1	
C5063,64		ECUX1C104ZFV	C.CAPACITOR CH 16V 0.1U	2	
C5065		ECUX1H101JCV	C.CAPACITOR CH 50V 100P	1	
C5066		ECUX1H050CCV	C.CAPACITOR CH 50V 5P	1	
C5067-69		ECUX1C104ZFV	C.CAPACITOR CH 16V 0.1U	3	
C5071-75		ECUX1C104ZFV	C.CAPACITOR CH 16V 0.1U	5	
C5076,77		ECUM1E104KBN	C.CAPACITOR 25V 0.1U	2	
C5078		ECUX1H680JCV	C.CAPACITOR 50V 68P	1	
C5079-84		ECUX1C104ZFV	C.CAPACITOR CH 16V 0.1U	6	
C5085		ECUX1H150JCV	C.CAPACITOR 50V 15P	1	
C5086,87		ECUX1C104ZFV	C.CAPACITOR CH 16V 0.1U	2	
C5088		ECUM1E104KBN	C.CAPACITOR 25V 0.1U	1	
C5089,90		ECUX1C104ZFV	C.CAPACITOR CH 16V 0.1U	2	
C5091,92		ECUM1E104KBN	C.CAPACITOR 25V 0.1U	2	
C5093-00		ECUX1C104ZFV	C.CAPACITOR CH 16V 0.1U	8	
C5101		ECUM1E104KBN	C.CAPACITOR 25V 0.1U	1	
C5102		ECUX1H821JCV	C.CAPACITOR 50V 820P	1	
C5103-07		ECUX1C104ZFV	C.CAPACITOR CH 16V 0.1U	5	
C5108		ECUM1E104KBN	C.CAPACITOR 25V 0.1U	1	
C5109-11		ECUX1C104ZFV	C.CAPACITOR CH 16V 0.1U	3	
C5112-15		ECUM1E104KBN	C.CAPACITOR 25V 0.1U	4	
C5116-19		ECUX1C104ZFV	C.CAPACITOR CH 16V 0.1U	4	
C5120		ECUX1H102JV	C.CAPACITOR CH 50V 1000P	1	
C5121,22		ECUX1C104ZFV	C.CAPACITOR CH 16V 0.1U	2	
C5123		ECEA1CGE471	E.CAPACITOR 16V 470U	1	
C5124		ECUX1C104ZFV	C.CAPACITOR CH 16V 0.1U	1	
C5125		ECEA1CGE471	E.CAPACITOR 16V 470U	1	
C5126		ECUX1C104ZFV	C.CAPACITOR CH 16V 0.1U	1	
C5301,02		ECA1HXS2R2	E.CAPACITOR 50V 2.2U	2	
C5303,04		ECUX1H271JCV	C.CAPACITOR CH 50V 270P	2	
C5305-16		ECUX1C104ZFV	C.CAPACITOR CH 16V 0.1U	12	
C5317		ECUX1H270JCV	C.CAPACITOR 50V 27P	1	
C5318		ECUX1H103ZFV	C.CAPACITOR CH 50V 0.01U	1	
C5319,20		ECUX1C104ZFV	C.CAPACITOR CH 16V 0.1U	2	
C5321		ECUM1E104KBN	C.CAPACITOR 25V 0.1U	1	
C5323,24		ECUX1C104ZFV	C.CAPACITOR CH 16V 0.1U	2	
C5325		ECUX1H150JCV	C.CAPACITOR 50V 15P	1	
C5326,27		ECUX1C104ZFV	C.CAPACITOR CH 16V 0.1U	2	
C5328		ECUM1E104KBN	C.CAPACITOR 25V 0.1U	1	
C5330		VCM0058C027	M.CAPACITOR V	1	
C5332		VCM0059F047	M.CAPACITOR	1	

Ref.No.		Part No.	Part Name & Description	Pcs	Remarks
C5334		VCM0059F110	M.CAPACITOR	1	
C5336		VCM0060F300	M.CAPACITOR	1	
C5337,38		ECUX1C104ZFV	C.CAPACITOR CH 16V 0.1U	2	
C5339		ECUM1E104KBN	C.CAPACITOR 25V 0.1U	1	
C5342		ECUX1H101JCV	C.CAPACITOR CH 50V 100P	1	
C5343-49		ECUX1C104ZFV	C.CAPACITOR CH 16V 0.1U	7	
C5350		ECUM1E104KBN	C.CAPACITOR 25V 0.1U	1	
C5351-54		ECUX1C104ZFV	C.CAPACITOR CH 16V 0.1U	4	
C5356-59		ECUX1C104ZFV	C.CAPACITOR CH 16V 0.1U	4	
C5360		ECUX1H101JCV	C.CAPACITOR CH 50V 100P	1	
C5361		ECUX1C104ZFV	C.CAPACITOR CH 16V 0.1U	1	
C5362		ECUX1H020CCV	C.CAPACITOR 50V 2P	1	
C5363,64		ECUX1C104ZFV	C.CAPACITOR CH 16V 0.1U	2	
C5365		ECUX1H101JCV	C.CAPACITOR CH 50V 100P	1	
C5366		ECUX1H050CCV	C.CAPACITOR CH 50V 5P	1	
C5367-69		ECUX1C104ZFV	C.CAPACITOR CH 16V 0.1U	3	
C5371-75		ECUX1C104ZFV	C.CAPACITOR CH 16V 0.1U	5	
C5376,77		ECUM1E104KBN	C.CAPACITOR 25V 0.1U	2	
C5378		ECUX1H680JCV	C.CAPACITOR 50V 68P	1	
C5379-84		ECUX1C104ZFV	C.CAPACITOR CH 16V 0.1U	6	
C5385		ECUX1H150JCV	C.CAPACITOR 50V 15P	1	
C5386,87		ECUX1C104ZFV	C.CAPACITOR CH 16V 0.1U	2	
C5388		ECUM1E104KBN	C.CAPACITOR 25V 0.1U	1	
C5389,90		ECUX1C104ZFV	C.CAPACITOR CH 16V 0.1U	2	
C5391,92		ECUM1E104KBN	C.CAPACITOR 25V 0.1U	2	
C5393-00		ECUX1C104ZFV	C.CAPACITOR CH 16V 0.1U	8	
C5401		ECUM1E104KBN	C.CAPACITOR 25V 0.1U	1	
C5402		ECUX1C104ZFV	C.CAPACITOR CH 16V 0.1U	1	
C5403		ECUX1H821JCV	C.CAPACITOR 50V 820P	1	
C5404-07		ECUX1C104ZFV	C.CAPACITOR CH 16V 0.1U	4	
C5408		ECUM1E104KBN	C.CAPACITOR 25V 0.1U	1	
C5409-11		ECUX1C104ZFV	C.CAPACITOR CH 16V 0.1U	3	
C5412-15		ECUM1E104KBN	C.CAPACITOR 25V 0.1U	4	
C5416-19		ECUX1C104ZFV	C.CAPACITOR CH 16V 0.1U	4	
C5420		ECUX1H102JV	C.CAPACITOR CH 50V 1000P	1	
C5421,22		ECUX1C104ZFV	C.CAPACITOR CH 16V 0.1U	2	
C5423		ECEA1CGE471	E.CAPACITOR 16V 470U	1	
C5424		ECUX1C104ZFV	C.CAPACITOR CH 16V 0.1U	1	
C5425		ECEA1CGE471	E.CAPACITOR 16V 470U	1	
C5426		ECUX1C104ZFV	C.CAPACITOR CH 16V 0.1U	1	
C5601-05		ECUX1C104ZFV	C.CAPACITOR CH 16V 0.1U	5	
C5606,07		ECA1CXS100	E.CAPACITOR 16V 10U	2	
C5608		ECUM1E104KBN	C.CAPACITOR 25V 0.1U	1	
C5609-13		ECUX1C104ZFV	C.CAPACITOR CH 16V 0.1U	5	
C5614		ECUX1H220JCV	C.CAPACITOR CH 50V 22P	1	
C5615		ECUX1H820JCV	C.CAPACITOR CH 50V 82P	1	
C5617		ECA1CXS100	E.CAPACITOR 16V 10U	1	
C5618		ECUX1C104ZFV	C.CAPACITOR CH 16V 0.1U	1	
C5619		ECUX1H020CCV	C.CAPACITOR 50V 2P	1	
C5622		ECUX1C104ZFV	C.CAPACITOR CH 16V 0.1U	1	
C5623		ECUX1H100DCV	C.CAPACITOR 50V 10P	1	
C5624		ECUX1C104ZFV	C.CAPACITOR CH 16V 0.1U	1	
C5626-34		ECUX1C104ZFV	C.CAPACITOR CH 16V 0.1U	9	
C5635		ECUX1H221JCV	C.CAPACITOR CH 50V 220P	1	
C5636-38		ECUX1C104ZFV	C.CAPACITOR CH 16V 0.1U	3	
C5701-05		ECUX1C104ZFV	C.CAPACITOR CH 16V 0.1U	5	
C5706,07		ECA1CXS100	E.CAPACITOR 16V 10U	2	
C5708		ECUM1E104KBN	C.CAPACITOR 25V 0.1U	1	
C5709-13		ECUX1C104ZFV	C.CAPACITOR CH 16V 0.1U	5	
C5714		ECUX1H220JCV	C.CAPACITOR CH 50V 22P	1	
C5715		ECUX1H820JCV	C.CAPACITOR CH 50V 82P	1	
C5717		ECA1CXS100	E.CAPACITOR 16V 10U	1	
C5718		ECUX1C104ZFV	C.CAPACITOR CH 16V 0.1U	1	
C5719		ECUX1H020CCV	C.CAPACITOR 50V 2P	1	
C5722		ECUX1C104ZFV	C.CAPACITOR CH 16V 0.1U	1	
C5723		ECUX1H100DCV	C.CAPACITOR 50V 10P	1	
C5724		ECUX1C104ZFV	C.CAPACITOR CH 16V 0.1U	1	
C5726-34		ECUX1C104ZFV	C.CAPACITOR CH 16V 0.1U	9	
C5736-38		ECUX1C104ZFV	C.CAPACITOR CH 16V 0.1U	3	
C5801		ECUX1C104ZFV	C.CAPACITOR CH 16V 0.1U	1	
C5802,03		ECEA1CGE471	E.CAPACITOR 16V 470U	2	
C5804		ECUX1C104ZFV	C.CAPACITOR CH 16V 0.1U	1	
C5805		ECA1EX1V101X	E.CAPACITOR 25V 100P	1	
C5806,07		ECUX1C104ZFV	C.CAPACITOR CH 16V 0.1U	2	
C5808,09		ECEA1CGE471	E.CAPACITOR 16V 470U	2	

S1

Ref.No.	Part No.	Part Name & Description	Pcs	Remarks
C5810	ECUX1C104ZFV	C.CAPACITOR CH 16V 0.1U	1	
C5811	ECA1EXLV101X	E.CAPACITOR 25V 100P	1	
C5812	ECUX1C104ZFV	C.CAPACITOR CH 16V 0.1U	1	
C5813	ECUX1H103ZFV	C.CAPACITOR CH 50V 0.01U	1	
C5814,15	ECA1EXLV101X	E.CAPACITOR 25V 100P	2	
C5816	ECUX1H103ZFV	C.CAPACITOR CH 50V 0.01U	1	
C5817	ECA1EXLV101X	E.CAPACITOR 25V 100P	1	
C5818,19	ECUX1C104ZFV	C.CAPACITOR CH 16V 0.1U	2	
C5820,21	ECEA1CGE471	E.CAPACITOR 16V 470U	2	
C5822	ECUX1C104ZFV	C.CAPACITOR CH 16V 0.1U	1	
C5823	ECEA1CGE471	E.CAPACITOR 16V 470U	1	
C5824	ECUX1C104ZFV	C.CAPACITOR CH 16V 0.1U	1	
C5825	ECEA1CGE471	E.CAPACITOR 16V 470U	1	
C5826-66	ECUX1C104ZFV	C.CAPACITOR CH 16V 0.1U	41	
C5867	ECUX1H562KBV	C.CAPACITOR 50V 5600P	1	
C5868	ECUX1C104ZFV	C.CAPACITOR CH 16V 0.1U	1	
C5869	ECUX1H102JV	C.CAPACITOR CH 50V 1000P	1	
C5870-76	ECUX1C104ZFV	C.CAPACITOR CH 16V 0.1U	7	
C5877,78	ECUM1E104KBN	C.CAPACITOR 25V 0.1U	2	
C5879-85	ECUX1C104ZFV	C.CAPACITOR CH 16V 0.1U	7	
D5601	1SS154	DIODE	1	
D5602	MA157	DIODE	1	
D5603	FC54M-5	DIODE	1	
D5701	1SS154	DIODE	1	
D5702	MA157	DIODE	1	
D5703	FC54M-5	DIODE	1	
DL5001	VLD0254	DELAY	1	
DL5002,03	VLD0255	DELAY	2	
DL5301	VLD0254	DELAY	1	
DL5302,03	VLD0255	DELAY	2	
FL5801-04	VLF0931	COIL	4	
IC5001	UPC1663G	IC	1	
IC5002-05	MC1495M	IC	4	
IC5006	UPC1663G	IC	1	
IC5007	AD96687BR	IC	1	
IC5008	NJM1496M	IC	1	
IC5009	TL082CPS	IC	1	
IC5010	AN7805	IC	1	
IC5011	AN7905F	IC	1	
IC5301	UPC1663G	IC	1	
IC5302-05	MC1495M	IC	4	
IC5306	UPC1663G	IC	1	
IC5307	AD96687BR	IC	1	
IC5308	NJM1496M	IC	1	
IC5309	TL082CPS	IC	1	
IC5310	AN7805	IC	1	
IC5311	AN7905F	IC	1	
IC5601	MB10HL116PFF	IC	1	
IC5602	MB10HL107PFF	IC	1	
IC5603	MB10HL116PFF	IC	1	
IC5604	MB10HL107PFF	IC	1	
IC5605	MB10HL116PFF	IC	1	
IC5606	MB813AZ	IC	1	
IC5607	MB10HL116PFF	IC	1	
IC5608	VCR0354	IC	1	
IC5609	TL082CPS	IC	1	
IC5701	MB10HL116PFF	IC	1	
IC5702	MB10HL107PFF	IC	1	
IC5703	MB10HL116PFF	IC	1	
IC5704	MB10HL107PFF	IC	1	
IC5705	MB10HL116PFF	IC	1	
IC5706	MB813AZ	IC	1	
IC5707	MB10HL116PFF	IC	1	

Ref.No.	Part No.	Part Name & Description	Pcs	Remarks
IC5708	VCR0354	IC	1	
IC5709	TL082CPS	IC	1	
IC5801	AN78N05	IC	1	
IC5802	AN79N05	IC	1	
IC5803	NJM78L08UA	IC	1	
IC5804	LM337T	IC	1	
IC5805,06	MB88346BPF	IC	2	
IC5807-10	TL084CNS	IC	4	
IC5811-14	UPD5201G	IC	4	
IC5815	MC14538BF	IC	1	
IC5816,17	MC14015BF	IC	2	
IC5818	MC74HC157AF	IC	1	
IC5819	MC74HC86F	IC	1	
IC5820	MC74HC08AF	IC	1	
IC5821	MC74HC04AF	IC	1	
IC5822	MC14053BF	IC	1	(R)
IC5823	MC74HC04AF	IC	1	
IC5824	MC74HC86F	IC	1	
IC5825,26	MC14053BF	IC	2	(R)
L5001	VLQ0188K1R0N	COIL 1UH	1	
L5301	VLQ0188K1R0N	COIL 1UH	1	
L5601	VLQ0188KR56N	COIL 0.56UH	1	
L5701	VLQ0188KR56N	COIL 0.56UH	1	
L5801	VLQ0128	COIL 47UH	1	
P001,02	VJP3454B096	CONNECTOR (MALE)	2	
P5001	VJP1230G	CONNECTOR (MALE) 3P	1	
P5301	VJP1230R	CONNECTOR (MALE) 3P	1	
Q5001	XN6537	TRANSISTOR	1	
Q5002,03	2SA1022-C	TRANSISTOR CHIP	2	(C)
Q5004,05	2SC2295-C	TRANSISTOR CHIP	2	(C)
Q5006-08	XN6537	TRANSISTOR	3	
Q5009,10	2SK508-B	TRANSISTOR	2	
Q5011-13	2SC3130	TRANSISTOR	3	
Q5015	XN6537	TRANSISTOR	1	
Q5016-20	2SC3130	TRANSISTOR	5	
Q5021-23	XN6537	TRANSISTOR	3	
Q5024,25	2SC3130	TRANSISTOR	2	
Q5026,27	XN6537	TRANSISTOR	2	
Q5028	2SC3130	TRANSISTOR	1	
Q5029,30	XN6537	TRANSISTOR	2	
Q5301	XN6537	TRANSISTOR	1	
Q5302,03	2SA1022-C	TRANSISTOR CHIP	2	(C)
Q5304,05	2SC2295-C	TRANSISTOR CHIP	2	(C)
Q5306-08	XN6537	TRANSISTOR	3	
Q5309,10	2SK508-B	TRANSISTOR	2	
Q5311-13	2SC3130	TRANSISTOR	3	
Q5315	XN6537	TRANSISTOR	1	
Q5316-20	2SC3130	TRANSISTOR	5	
Q5321-23	XN6537	TRANSISTOR	3	
Q5324,25	2SC3130	TRANSISTOR	2	
Q5326,27	XN6537	TRANSISTOR	2	
Q5328	2SC3130	TRANSISTOR	1	
Q5329,30	XN6537	TRANSISTOR	2	
Q5604	2SA1022-C	TRANSISTOR CHIP	1	(C)
Q5801-04	2SD1938	TRANSISTOR	4	
		RESISTORS		
R5001,02	VRE0034E510	M.RESISTOR CH 1/10W 51	2	
R5003,04	ERJ3GEYJ470	M.RESISTOR CH 1/16W 47	2	
R5005	VRE0034E302	M.RESISTOR CH 1/10W 3K	1	
R5006	ERJ3GEYJ150	M.RESISTOR CH 1/16W 15	1	
R5007	VRE0034E302	M.RESISTOR CH 1/10W 3K	1	
R5008	ERJ3GEYJ150	M.RESISTOR CH 1/16W 15	1	
R5009	VRE0034E751	M.RESISTOR CH 1/10W 750	1	

Ref.No.	Part No.	Part Name & Description	Pcs	Remarks
R5010	VRE0034E911	M.RESISTOR CH 1/10W 910	1	
R5011	VRE0034E751	M.RESISTOR CH 1/10W 750	1	
R5012,13	VRE0034E361	M.RESISTOR CH 1/10W 360	2	
R5014,15	VRE0034E391	M.RESISTOR CH 1/10W 390	2	
R5016,17	ERJ3GEYJ470	M.RESISTOR CH 1/16W 47	2	
R5018	ERJ3GEYJ101	M.RESISTOR CH 1/16W 100	1	
R5019,20	ERJ3GEYJ331	M.RESISTOR CH 1/16W 330	2	
R5021,22	ERJ3GEYJ222	M.RESISTOR CH 1/16W 2.2K	2	
R5023,24	VRE0034E391	M.RESISTOR CH 1/10W 390	2	
R5025,26	ERJ3GEYJ470	M.RESISTOR CH 1/16W 47	2	
R5027,28	ERJ3GEYJ560	M.RESISTOR CH 1/16W 56	2	
R5029,30	ERJ6GEYJ182	M.RESISTOR CH 1/10W 1.8K	2	
R5031	VRE0034E471	M.RESISTOR CH 1/10W 470	1	
R5032	VRE0034E103	M.RESISTOR CH 1/10W 10K	1	
R5033	VRE0034E431	M.RESISTOR CH 1/10W 430	1	
R5034	VRE0034E271	M.RESISTOR CH 1/10W 270	1	
R5035	VRE0034E471	M.RESISTOR CH 1/10W 470	1	
R5036	VRE0034E103	M.RESISTOR CH 1/10W 10K	1	
R5037	VRE0034E431	M.RESISTOR CH 1/10W 430	1	
R5038,39	ERJ3GEYJ221	M.RESISTOR CH 1/16W 220	2	
R5040	ERJ3GEYJ470	M.RESISTOR CH 1/16W 47	1	
R5041	ERJ3GEYJ560	M.RESISTOR CH 1/16W 56	1	
R5042	ERJ6GEYJ152	M.RESISTOR CH 1/10W 1.5K	1	
R5043	ERJ3GEYJ472	M.RESISTOR CH 1/16W 4.7K	1	
R5044	VRE0034E121	M.RESISTOR CH 1/10W 120	1	
R5045	ERJ3GEYJ470	M.RESISTOR CH 1/16W 47	1	
R5048	ERJ3GEYJ101	M.RESISTOR CH 1/16W 100	1	
R5049	ERJ3GEYJ470	M.RESISTOR CH 1/16W 47	1	
R5050	ERJ3GEYJ821	M.RESISTOR CH 1/16W 820	1	
R5052	ERJ3GEYJ331	M.RESISTOR CH 1/16W 330	1	
R5053,54	ERJ3GEYJ101	M.RESISTOR CH 1/16W 100	2	
R5055	ERJ3GEYJ470	M.RESISTOR CH 1/16W 47	1	
R5056	ERJ3GEYJ560	M.RESISTOR CH 1/16W 56	1	
R5057	ERJ6GEYJ102	M.RESISTOR CH 1/10W 1K	1	
R5058,59	VRE0034E510	M.RESISTOR CH 1/10W 51	2	
R5060	ERJ3GEYJ470	M.RESISTOR CH 1/16W 47	1	
R5061	ERJ3GEYJ560	M.RESISTOR CH 1/16W 56	1	
R5062	ERJ6GEYJ102	M.RESISTOR CH 1/10W 1K	1	
R5063	ERJ3GEYJ472	M.RESISTOR CH 1/16W 4.7K	1	
R5064,65	VRE0034E510	M.RESISTOR CH 1/10W 51	2	
R5067,68	ERJ3GEYJ470	M.RESISTOR CH 1/16W 47	2	
R5069	ERJ3GEYJ391	M.RESISTOR CH 1/16W 390	1	
R5070	ERJ3GEYJ122	M.RESISTOR CH 1/16W 1.2K	1	
R5071	ERJ3GEYJ470	M.RESISTOR CH 1/16W 47	1	
R5072	ERJ3GEYJ331	M.RESISTOR CH 1/16W 330	1	
R5073	ERJ3GEYJ122	M.RESISTOR CH 1/16W 1.2K	1	
R5074	ERJ3GEYJ561	M.RESISTOR CH 1/16W 560	1	
R5075,76	ERJ3GEYJ222	M.RESISTOR CH 1/16W 2.2K	2	
R5077,78	ERJ3GEYJ391	M.RESISTOR CH 1/16W 390	2	
R5079	ERJ3GEYJ470	M.RESISTOR CH 1/16W 47	1	
R5080	ERJ3GEYJ560	M.RESISTOR CH 1/16W 56	1	
R5081	ERJ6GEYJ122	M.RESISTOR CH 1/10W 1.2K	1	
R5083	ERJ3GEYJ472	M.RESISTOR CH 1/16W 4.7K	1	
R5084	VRE0034E510	M.RESISTOR CH 1/10W 51	1	
R5085	VRE0034E130	M.RESISTOR CH 1/10W 13	1	
R5086	ERJ3GEYJ330	M.RESISTOR CH 1/16W 33	1	
R5087	ERJ3GEYJ560	M.RESISTOR CH 1/16W 56	1	
R5088	ERJ3GEYJ122	M.RESISTOR CH 1/16W 1.2K	1	
R5089	ERJ3GEYJ330	M.RESISTOR CH 1/16W 33	1	
R5090	ERJ3GEYJ560	M.RESISTOR CH 1/16W 56	1	
R5091	ERJ3GEYJ122	M.RESISTOR CH 1/16W 1.2K	1	
R5092	ERJ3GEYJ330	M.RESISTOR CH 1/16W 33	1	
R5093	ERJ3GEYJ560	M.RESISTOR CH 1/16W 56	1	
R5094	ERJ3GEYJ122	M.RESISTOR CH 1/16W 1.2K	1	
R5095	ERJ3GEYJ470	M.RESISTOR CH 1/16W 47	1	
R5096	ERJ3GEYJ560	M.RESISTOR CH 1/16W 56	1	
R5097	ERJ3GEYJ182	M.RESISTOR CH 1/16W 1.8K	1	
R5098,99	ERJ3GEYJ330	M.RESISTOR CH 1/16W 33	2	
R5100	ERJ3GEYJ102	M.RESISTOR CH 1/16W 1K	1	
R5101	ERJ3GEYJ392	M.RESISTOR CH 1/16W 3.9K	1	
R5102	ERJ3GEYJ561	M.RESISTOR CH 1/16W 560	1	
R5103	ERJ3GEYJ122	M.RESISTOR CH 1/16W 1.2K	1	
R5104	ERJ3GEYJ331	M.RESISTOR CH 1/16W 330	1	
R5105	ERJ3GEYJ122	M.RESISTOR CH 1/16W 1.2K	1	
R5106	ERJ3GEYJ561	M.RESISTOR CH 1/16W 560	1	

Ref.No.	Part No.	Part Name & Description	Pcs	Remarks
R5107,08	ERJ3GEYJ330	M.RESISTOR CH 1/16W 33	2	
R5109	ERJ3GEYJ470	M.RESISTOR CH 1/16W 47	1	
R5110	ERJ3GEYJ331	M.RESISTOR CH 1/16W 330	1	
R5111	ERJ3GEYJ122	M.RESISTOR CH 1/16W 1.2K	1	
R5112	ERJ3GEYJ151	M.RESISTOR CH 1/16W 150	1	
R5113	ERJ3GEYJ122	M.RESISTOR CH 1/16W 1.2K	1	
R5114	ERJ3GEYJ561	M.RESISTOR CH 1/16W 560	1	
R5115,16	ERJ3GEYJ330	M.RESISTOR CH 1/16W 33	2	
R5117	ERJ3GEYJ102	M.RESISTOR CH 1/16W 1K	1	
R5118	ERJ3GEYJ392	M.RESISTOR CH 1/16W 3.9K	1	
R5119	ERJ3GEYJ470	M.RESISTOR CH 1/16W 47	1	
R5120	ERJ3GEYJ331	M.RESISTOR CH 1/16W 330	1	
R5121	ERJ3GEYJ122	M.RESISTOR CH 1/16W 1.2K	1	
R5122	ERJ3GEYJ331	M.RESISTOR CH 1/16W 330	1	
R5123	ERJ3GEYJ122	M.RESISTOR CH 1/16W 1.2K	1	
R5124	ERJ3GEYJ561	M.RESISTOR CH 1/16W 560	1	
R5125,26	ERJ3GEYJ181	M.RESISTOR CH 1/16W 180	2	
R5127,28	ERJ3GEYJ222	M.RESISTOR CH 1/16W 2.2K	2	
R5129,30	ERJ3GEYJ472	M.RESISTOR CH 1/16W 4.7K	2	
R5131,32	ERJ3GEYJ470	M.RESISTOR CH 1/16W 47	2	
R5133,34	ERJ3GEYJ221	M.RESISTOR CH 1/16W 220	2	
R5135,36	ERJ3GEYJ331	M.RESISTOR CH 1/16W 330	2	
R5137,38	ERJ3GEYJ222	M.RESISTOR CH 1/16W 2.2K	2	
R5139,40	ERJ3GEYJ391	M.RESISTOR CH 1/16W 390	2	
R5141	ERJ3GEYJ470	M.RESISTOR CH 1/16W 47	1	
R5142	ERJ3GEYJ560	M.RESISTOR CH 1/16W 56	1	
R5143	ERJ3GEYJ222	M.RESISTOR CH 1/16W 2.2K	1	
R5144,45	ERJ3GEYJ101	M.RESISTOR CH 1/16W 100	2	
R5146	ERJ3GEYJ470	M.RESISTOR CH 1/16W 47	1	
R5147	ERJ3GEYJ560	M.RESISTOR CH 1/16W 56	1	
R5148	ERJ6GEYJ182	M.RESISTOR CH 1/10W 1.8K	1	
R5149	VRE0034E750	M.RESISTOR CH 1/10W 75	1	
R5150	ERJ3GEYJ470	M.RESISTOR CH 1/16W 47	1	
R5151	VRE0034E750	M.RESISTOR CH 1/10W 75	1	
R5152	ERJ3GEYJ821	M.RESISTOR CH 1/16W 820	1	
R5153,54	ERJ3GEYJ331	M.RESISTOR CH 1/16W 330	2	
R5155,56	ERJ3GEYJ472	M.RESISTOR CH 1/16W 4.7K	2	
R5157	ERJ3GEYJ470	M.RESISTOR CH 1/16W 47	1	
R5158,59	ERJ3GEYJ472	M.RESISTOR CH 1/16W 4.7K	2	
R5160	ERJ3GEYJ470	M.RESISTOR CH 1/16W 47	1	
R5161,62	ERJ3GEYJ330	M.RESISTOR CH 1/16W 33	2	
R5163,64	ERJ6GEYJ122	M.RESISTOR CH 1/10W 1.2K	2	
R5165,66	ERJ6GEYJ391	M.RESISTOR CH 1/10W 390	2	
R5167,68	ERJ3GEYJ560	M.RESISTOR CH 1/16W 56	2	
R5169-72	ERJ3GEY0R00	M.RESISTOR CH 1/16W 0	4	
R5173,74	ERJ3GEYJ470	M.RESISTOR CH 1/16W 47	2	
R5175	ERJ3GEYJ560	M.RESISTOR CH 1/16W 56	1	
R5176,77	ERJ6GEYJ102	M.RESISTOR CH 1/10W 1K	2	
R5178,79	ERJ3GEYJ102	M.RESISTOR CH 1/16W 1K	2	
R5180,81	ERJ3GEYJ470	M.RESISTOR CH 1/16W 47	2	
R5182	ERJ3GEYJ560	M.RESISTOR CH 1/16W 56	1	
R5183	VRE0034E101	M.RESISTOR CH 1/10W 100	1	
R5184	VRE0034E112	M.RESISTOR CH 1/10W 1.1K	1	
R5185	ERJ3GEYJ560	M.RESISTOR CH 1/16W 56	1	
R5186	ERJ3GEYJ122	M.RESISTOR CH 1/16W 1.2K	1	
R5187-90	ERJ3GEYJ470	M.RESISTOR CH 1/16W 47	4	
R5191	ERJ3GEYJ560	M.RESISTOR CH 1/16W 56	1	
R5192,93	ERJ6GEYJ821	M.RESISTOR CH 1/10W 820	2	
R5194	ERJ3GEYJ472	M.RESISTOR CH 1/16W 4.7K	1	
R5195	VRE0034E510	M.RESISTOR CH 1/10W 51	1	
R5196	VRE0034E750	M.RESISTOR CH 1/10W 75	1	
R5197,98	ERJ3GEYJ470	M.RESISTOR CH 1/16W 47	2	
R5199	ERJ3GEYJ560	M.RESISTOR CH 1/16W 56	1	
R5200,01	ERJ3GEYJ152	M.RESISTOR CH 1/16W 1.5K	2	
R5202,03	ERJ3GEYJ102	M.RESISTOR CH 1/16W 1K	2	
R5204,05	ERJ3GEYJ560	M.RESISTOR CH 1/16W 56	2	
R5206,07	ERJ3GEYJ102	M.RESISTOR CH 1/16W 1K	2	
R5208	ERJ3GEYJ821	M.RESISTOR CH 1/16W 820	1	
R5209	ERJ3GEYJ102	M.RESISTOR CH 1/16W 1K	1	
R5210,11	ERJ3GEYJ560	M.RESISTOR CH 1/16W 56	2	
R5212	ERJ3GEYJ392	M.RESISTOR CH 1/16W 3.9K	1	
R5213,14	ERJ3GEYJ102	M.RESISTOR CH 1/16W 1K	2	
R5215	ERJ3GEYJ562	M.RESISTOR CH 1/16W 5.6K	1	
R5216	ERJ3GEYJ222	M.RESISTOR CH 1/16W 2.2K	1	
R5217	ERJ3GEYJ102	M.RESISTOR CH 1/16W 1K	1	

Ref.No.	Part No.	Part Name & Description	Pcs	Remarks
R5218	ERJ3GEYJ103	M.RESISTOR CH 1/16W 10K	1	
R5219	ERJ3GEYJ102	M.RESISTOR CH 1/16W 1K	1	
R5220	ERJ3GEYJ103	M.RESISTOR CH 1/16W 10K	1	
R5221	ERJ3GEYJ470	M.RESISTOR CH 1/16W 47	1	
R5222	ERJ3GEYJ102	M.RESISTOR CH 1/16W 1K	1	
R5301,02	VRE0034E510	M.RESISTOR CH 1/10W 51	2	
R5303,04	ERJ3GEYJ470	M.RESISTOR CH 1/16W 47	2	
R5305	VRE0034E302	M.RESISTOR CH 1/10W 3K	1	
R5306	ERJ3GEYJ150	M.RESISTOR CH 1/16W 15	1	
R5307	VRE0034E302	M.RESISTOR CH 1/10W 3K	1	
R5308	ERJ3GEYJ150	M.RESISTOR CH 1/16W 15	1	
R5309	VRE0034E751	M.RESISTOR CH 1/10W 750	1	
R5310	VRE0034E911	M.RESISTOR CH 1/10W 910	1	
R5311	VRE0034E751	M.RESISTOR CH 1/10W 750	1	
R5312,13	VRE0034E361	M.RESISTOR CH 1/10W 360	2	
R5314,15	VRE0034E391	M.RESISTOR CH 1/10W 390	2	
R5316,17	ERJ3GEYJ470	M.RESISTOR CH 1/16W 47	2	
R5318	ERJ3GEYJ101	M.RESISTOR CH 1/16W 100	1	
R5319,20	ERJ3GEYJ331	M.RESISTOR CH 1/16W 330	2	
R5321,22	ERJ3GEYJ222	M.RESISTOR CH 1/16W 2.2K	2	
R5323,24	VRE0034E391	M.RESISTOR CH 1/10W 390	2	
R5325,26	ERJ3GEYJ470	M.RESISTOR CH 1/16W 47	2	
R5327,28	ERJ3GEYJ560	M.RESISTOR CH 1/16W 56	2	
R5329,30	ERJ6GEYJ182	M.RESISTOR CH 1/10W 1.8K	2	
R5331	VRE0034E471	M.RESISTOR CH 1/10W 470	1	
R5332	VRE0034E103	M.RESISTOR CH 1/10W 10K	1	
R5333	VRE0034E431	M.RESISTOR CH 1/10W 430	1	
R5334	VRE0034E271	M.RESISTOR CH 1/10W 270	1	
R5335	VRE0034E471	M.RESISTOR CH 1/10W 470	1	
R5336	VRE0034E103	M.RESISTOR CH 1/10W 10K	1	
R5337	VRE0034E431	M.RESISTOR CH 1/10W 430	1	
R5338,39	ERJ3GEYJ221	M.RESISTOR CH 1/16W 220	2	
R5340	ERJ3GEYJ470	M.RESISTOR CH 1/16W 47	1	
R5341	ERJ3GEYJ560	M.RESISTOR CH 1/16W 56	1	
R5342	ERJ6GEYJ152	M.RESISTOR CH 1/10W 1.5K	1	
R5343	ERJ3GEYJ472	M.RESISTOR CH 1/16W 4.7K	1	
R5344	VRE0034E121	M.RESISTOR CH 1/10W 120	1	
R5347	ERJ3GEYJ101	M.RESISTOR CH 1/16W 100	1	
R5348,49	ERJ3GEYJ470	M.RESISTOR CH 1/16W 47	2	
R5350	ERJ3GEYJ821	M.RESISTOR CH 1/16W 820	1	
R5352	ERJ3GEYJ331	M.RESISTOR CH 1/16W 330	1	
R5353,54	ERJ3GEYJ101	M.RESISTOR CH 1/16W 100	2	
R5355	ERJ3GEYJ470	M.RESISTOR CH 1/16W 47	1	
R5356	ERJ3GEYJ560	M.RESISTOR CH 1/16W 56	1	
R5357	ERJ6GEYJ102	M.RESISTOR CH 1/10W 1K	1	
R5358,59	VRE0034E510	M.RESISTOR CH 1/10W 51	2	
R5360	ERJ3GEYJ470	M.RESISTOR CH 1/16W 47	1	
R5361	ERJ3GEYJ560	M.RESISTOR CH 1/16W 56	1	
R5362	ERJ6GEYJ102	M.RESISTOR CH 1/10W 1K	1	
R5363	ERJ3GEYJ472	M.RESISTOR CH 1/16W 4.7K	1	
R5364,65	VRE0034E510	M.RESISTOR CH 1/10W 51	2	
R5367,68	ERJ3GEYJ470	M.RESISTOR CH 1/16W 47	2	
R5369	ERJ3GEYJ391	M.RESISTOR CH 1/16W 390	1	
R5370	ERJ3GEYJ122	M.RESISTOR CH 1/16W 1.2K	1	
R5371	ERJ3GEYJ470	M.RESISTOR CH 1/16W 47	1	
R5372	ERJ3GEYJ331	M.RESISTOR CH 1/16W 330	1	
R5373	ERJ3GEYJ122	M.RESISTOR CH 1/16W 1.2K	1	
R5374	ERJ3GEYJ561	M.RESISTOR CH 1/16W 560	1	
R5375,76	ERJ3GEYJ222	M.RESISTOR CH 1/16W 2.2K	2	
R5377,78	ERJ3GEYJ391	M.RESISTOR CH 1/16W 390	2	
R5379	ERJ3GEYJ470	M.RESISTOR CH 1/16W 47	1	
R5380	ERJ3GEYJ560	M.RESISTOR CH 1/16W 56	1	
R5381	ERJ6GEYJ122	M.RESISTOR CH 1/10W 1.2K	1	
R5383	ERJ3GEYJ472	M.RESISTOR CH 1/16W 4.7K	1	
R5384	VRE0034E510	M.RESISTOR CH 1/10W 51	1	
R5385	VRE0034E130	M.RESISTOR CH 1/10W 13	1	
R5386	ERJ3GEYJ330	M.RESISTOR CH 1/16W 33	1	
R5387	ERJ3GEYJ560	M.RESISTOR CH 1/16W 56	1	
R5388	ERJ3GEYJ122	M.RESISTOR CH 1/16W 1.2K	1	
R5389	ERJ3GEYJ330	M.RESISTOR CH 1/16W 33	1	
R5390	ERJ3GEYJ560	M.RESISTOR CH 1/16W 56	1	
R5391	ERJ3GEYJ122	M.RESISTOR CH 1/16W 1.2K	1	
R5392	ERJ3GEYJ330	M.RESISTOR CH 1/16W 33	1	
R5393	ERJ3GEYJ560	M.RESISTOR CH 1/16W 56	1	
R5394	ERJ3GEYJ122	M.RESISTOR CH 1/16W 1.2K	1	

Ref.No.	Part No.	Part Name & Description	Pcs	Remarks
R5395	ERJ3GEYJ470	M.RESISTOR CH 1/16W 47	1	
R5396	ERJ3GEYJ560	M.RESISTOR CH 1/16W 56	1	
R5397	ERJ3GEYJ182	M.RESISTOR CH 1/16W 1.8K	1	
R5398,99	ERJ3GEYJ330	M.RESISTOR CH 1/16W 33	2	
R5400	ERJ3GEYJ102	M.RESISTOR CH 1/16W 1K	1	
R5401	ERJ3GEYJ392	M.RESISTOR CH 1/16W 3.9K	1	
R5402	ERJ3GEYJ561	M.RESISTOR CH 1/16W 560	1	
R5403	ERJ3GEYJ122	M.RESISTOR CH 1/16W 1.2K	1	
R5404	ERJ3GEYJ331	M.RESISTOR CH 1/16W 330	1	
R5405	ERJ3GEYJ122	M.RESISTOR CH 1/16W 1.2K	1	
R5406	ERJ3GEYJ561	M.RESISTOR CH 1/16W 560	1	
R5407,08	ERJ3GEYJ330	M.RESISTOR CH 1/16W 33	2	
R5409	ERJ3GEYJ470	M.RESISTOR CH 1/16W 47	1	
R5410	ERJ3GEYJ331	M.RESISTOR CH 1/16W 330	1	
R5411	ERJ3GEYJ122	M.RESISTOR CH 1/16W 1.2K	1	
R5412	ERJ3GEYJ151	M.RESISTOR CH 1/16W 150	1	
R5413	ERJ3GEYJ122	M.RESISTOR CH 1/16W 1.2K	1	
R5414	ERJ3GEYJ561	M.RESISTOR CH 1/16W 560	1	
R5415,16	ERJ3GEYJ330	M.RESISTOR CH 1/16W 33	2	
R5417	ERJ3GEYJ102	M.RESISTOR CH 1/16W 1K	1	
R5418	ERJ3GEYJ392	M.RESISTOR CH 1/16W 3.9K	1	
R5419	ERJ3GEYJ470	M.RESISTOR CH 1/16W 47	1	
R5420	ERJ3GEYJ331	M.RESISTOR CH 1/16W 330	1	
R5421	ERJ3GEYJ122	M.RESISTOR CH 1/16W 1.2K	1	
R5422	ERJ3GEYJ331	M.RESISTOR CH 1/16W 330	1	
R5423	ERJ3GEYJ122	M.RESISTOR CH 1/16W 1.2K	1	
R5424	ERJ3GEYJ561	M.RESISTOR CH 1/16W 560	1	
R5425,26	ERJ3GEYJ222	M.RESISTOR CH 1/16W 2.2K	2	
R5427,28	ERJ3GEYJ181	M.RESISTOR CH 1/16W 180	2	
R5429,30	ERJ3GEYJ472	M.RESISTOR CH 1/16W 4.7K	2	
R5431,32	ERJ3GEYJ470	M.RESISTOR CH 1/16W 47	2	
R5433,34	ERJ3GEYJ221	M.RESISTOR CH 1/16W 220	2	
R5435,36	ERJ3GEYJ331	M.RESISTOR CH 1/16W 330	2	
R5437,38	ERJ3GEYJ222	M.RESISTOR CH 1/16W 2.2K	2	
R5439,40	ERJ3GEYJ391	M.RESISTOR CH 1/16W 390	2	
R5441	ERJ3GEYJ470	M.RESISTOR CH 1/16W 47	1	
R5442	ERJ3GEYJ560	M.RESISTOR CH 1/16W 56	1	
R5443	ERJ3GEYJ222	M.RESISTOR CH 1/16W 2.2K	1	
R5444,45	ERJ3GEYJ101	M.RESISTOR CH 1/16W 100	2	
R5446	ERJ3GEYJ470	M.RESISTOR CH 1/16W 47	1	
R5447	ERJ3GEYJ560	M.RESISTOR CH 1/16W 56	1	
R5448	ERJ6GEYJ182	M.RESISTOR CH 1/10W 1.8K	1	
R5449	VRE0034E750	M.RESISTOR CH 1/10W 75	1	
R5450	ERJ3GEYJ470	M.RESISTOR CH 1/16W 47	1	
R5451	VRE0034E750	M.RESISTOR CH 1/10W 75	1	
R5452	ERJ3GEYJ821	M.RESISTOR CH 1/16W 820	1	
R5453,54	ERJ3GEYJ331	M.RESISTOR CH 1/16W 330	2	
R5455,56	ERJ3GEYJ472	M.RESISTOR CH 1/16W 4.7K	2	
R5457	ERJ3GEYJ470	M.RESISTOR CH 1/16W 47	1	
R5458,59	ERJ3GEYJ472	M.RESISTOR CH 1/16W 4.7K	2	
R5460	ERJ3GEYJ470	M.RESISTOR CH 1/16W 47	1	
R5461,62	ERJ3GEYJ330	M.RESISTOR CH 1/16W 33	2	
R5463,64	ERJ6GEYJ122	M.RESISTOR CH 1/10W 1.2K	2	
R5465,66	ERJ6GEYJ391	M.RESISTOR CH 1/10W 390	2	
R5467,68	ERJ3GEYJ560	M.RESISTOR CH 1/16W 56	2	
R5473,74	ERJ3GEYJ470	M.RESISTOR CH 1/16W 47	2	
R5475	ERJ3GEYJ560	M.RESISTOR CH 1/16W 56	1	
R5476,77	ERJ6GEYJ102	M.RESISTOR CH 1/10W 1K	2	
R5478,79	ERJ3GEYJ102	M.RESISTOR CH 1/16W 1K	2	
R5480,81	ERJ3GEYJ470	M.RESISTOR CH 1/16W 47	2	
R5482	ERJ3GEYJ560	M.RESISTOR CH 1/16W 56	1	
R5483	VRE0034E101	M.RESISTOR CH 1/10W 100	1	
R5484	VRE0034E112	M.RESISTOR CH 1/10W 1.1K	1	
R5485	ERJ3GEYJ560	M.RESISTOR CH 1/16W 56	1	
R5486	ERJ3GEYJ122	M.RESISTOR CH 1/16W 1.2K	1	
R5487-90	ERJ3GEYJ470	M.RESISTOR CH 1/16W 47	4	
R5491	ERJ3GEYJ560	M.RESISTOR CH 1/16W 56	1	
R5492,93	ERJ6GEYJ821	M.RESISTOR CH 1/10W 820	2	
R5494	ERJ3GEYJ472	M.RESISTOR CH 1/16W 4.7K	1	
R5495	VRE0034E510	M.RESISTOR CH 1/10W 51	1	
R5496	VRE0034E750	M.RESISTOR CH 1/10W 75	1	
R5497,98	ERJ3GEYJ470	M.RESISTOR CH 1/16W 47	2	
R5499	ERJ3GEYJ560	M.RESISTOR CH 1/16W 56	1	
R5500,01	ERJ3GEYJ152	M.RESISTOR CH 1/16W 1.5K	2	
R5502,03	ERJ3GEYJ102	M.RESISTOR CH 1/16W 1K	2	

Ref.No.		Part No.	Part Name & Description	Pcs	Remarks
R5504,05		ERJ3GEYJ560	M.RESISTOR CH 1/16W 56	2	
R5506,07		ERJ3GEYJ102	M.RESISTOR CH 1/16W 1K	2	
R5508		ERJ3GEYJ821	M.RESISTOR CH 1/16W 820	1	
R5509		ERJ3GEYJ102	M.RESISTOR CH 1/16W 1K	1	
R5510,11		ERJ3GEYJ560	M.RESISTOR CH 1/16W 56	2	
R5512		ERJ3GEYJ392	M.RESISTOR CH 1/16W 3.9K	1	
R5513,14		ERJ3GEYJ102	M.RESISTOR CH 1/16W 1K	2	
R5515		ERJ3GEYJ562	M.RESISTOR CH 1/16W 5.6K	1	
R5516		ERJ3GEYJ222	M.RESISTOR CH 1/16W 2.2K	1	
R5517		ERJ3GEYJ102	M.RESISTOR CH 1/16W 1K	1	
R5518		ERJ3GEYJ103	M.RESISTOR CH 1/16W 10K	1	
R5519		ERJ3GEYJ102	M.RESISTOR CH 1/16W 1K	1	
R5520		ERJ3GEYJ103	M.RESISTOR CH 1/16W 10K	1	
R5521		ERJ3GEYJ470	M.RESISTOR CH 1/16W 47	1	
R5522		ERJ3GEYJ102	M.RESISTOR CH 1/16W 1K	1	
R5601,02		ERJ3GEYJ101	M.RESISTOR CH 1/16W 100	2	
R5603		ERJ3GEYJ331	M.RESISTOR CH 1/16W 330	1	
R5604-06		ERJ3GEYJ101	M.RESISTOR CH 1/16W 100	3	
R5609-17		ERJ3GEYJ101	M.RESISTOR CH 1/16W 100	9	
R5619		ERJ3GEYJ331	M.RESISTOR CH 1/16W 330	1	
R5620,21		ERJ3GEYJ100	M.RESISTOR CH 1/16W 10	2	
R5622		ERJ3GEYJ271	M.RESISTOR CH 1/16W 270	1	
R5623		ERJ3GEYJ101	M.RESISTOR CH 1/16W 100	1	
R5624		ERJ3GEYJ104	M.RESISTOR CH 1/16W 100K	1	
R5625		ERJ3GEYJ101	M.RESISTOR CH 1/16W 100	1	
R5626		VRE0034E103	M.RESISTOR CH 1/10W 10K	1	
R5627		ERJ3GEY0R00	M.RESISTOR CH 1/16W 0	1	
R5628		VRE0034E752	M.RESISTOR CH 1/10W 7.5K	1	
R5629,30		ERJ3GEY0R00	M.RESISTOR CH 1/16W 0	2	
R5631		ERSB10J182	M.RESISTOR 1W 1.8K	1	
R5632		VRE0034E432	M.RESISTOR CH 1/10W 4.3K	1	
R5633		VRE0034E103	M.RESISTOR CH 1/10W 10K	1	
R5634		ERJ3GEYJ101	M.RESISTOR CH 1/16W 100	1	
R5635		ERJ3GEY0R00	M.RESISTOR CH 1/16W 0	1	
R5637		ERJ3GEYJ820	M.RESISTOR CH 1/16W 82	1	
R5638		ERJ3GEYJ271	M.RESISTOR CH 1/16W 270	1	
R5639		ERJ3GEY0R00	M.RESISTOR CH 1/16W 0	1	
R5640		ERJ3GEYJ102	M.RESISTOR CH 1/16W 1K	1	
R5647,48		VRE0034E750	M.RESISTOR CH 1/10W 75	2	
R5649,50		ERJ3GEYJ101	M.RESISTOR CH 1/16W 100	2	
R5651		ERJ3GEYJ221	M.RESISTOR CH 1/16W 220	1	
R5652,53		ERJ3GEYJ330	M.RESISTOR CH 1/16W 33	2	
R5654-57		ERJ3GEYJ101	M.RESISTOR CH 1/16W 100	4	
R5659		ERJ3GEY0R00	M.RESISTOR CH 1/16W 0	1	
R5660		ERJ3GEYJ330	M.RESISTOR CH 1/16W 33	1	
R5661-64		ERJ3GEYJ101	M.RESISTOR CH 1/16W 100	4	
R5665,66		ERJ6GEYJ331	M.RESISTOR CH 1/10W 330	2	
R5667,68		ERJ3GEYJ560	M.RESISTOR CH 1/16W 56	2	
R5669,70		ERJ6GEYJ331	M.RESISTOR CH 1/10W 330	2	
R5671,72		ERJ3GEYJ560	M.RESISTOR CH 1/16W 56	2	
R5673		ERJ3GEYJ103	M.RESISTOR CH 1/16W 10K	1	
R5674		ERJ3GEYJ392	M.RESISTOR CH 1/16W 3.9K	1	
R5675		ERJ3GEYJ103	M.RESISTOR CH 1/16W 10K	1	
R5676		VRE0034E103	M.RESISTOR CH 1/10W 10K	1	
R5677		VRE0034E562	M.RESISTOR CH 1/10W 5.6K	1	
R5678		VRE0034E362	M.RESISTOR CH 1/10W 3.6K	1	
R5679,80		ERJ3GEYJ470	M.RESISTOR CH 1/16W 47	2	
R5701,02		ERJ3GEYJ101	M.RESISTOR CH 1/16W 100	2	
R5703		ERJ3GEYJ331	M.RESISTOR CH 1/16W 330	1	
R5704-06		ERJ3GEYJ101	M.RESISTOR CH 1/16W 100	3	
R5709-17		ERJ3GEYJ101	M.RESISTOR CH 1/16W 100	9	
R5719		ERJ3GEYJ331	M.RESISTOR CH 1/16W 330	1	
R5720,21		ERJ3GEYJ100	M.RESISTOR CH 1/16W 10	2	
R5722		ERJ3GEYJ271	M.RESISTOR CH 1/16W 270	1	
R5723		ERJ3GEYJ101	M.RESISTOR CH 1/16W 100	1	
R5724		ERJ3GEYJ104	M.RESISTOR CH 1/16W 100K	1	
R5725		ERJ3GEYJ101	M.RESISTOR CH 1/16W 100	1	
R5726		VRE0034E103	M.RESISTOR CH 1/10W 10K	1	
R5727		ERJ3GEY0R00	M.RESISTOR CH 1/16W 0	1	
R5728		VRE0034E752	M.RESISTOR CH 1/10W 7.5K	1	
R5729,30		ERJ3GEY0R00	M.RESISTOR CH 1/16W 0	2	
R5731		ERSB10J182	M.RESISTOR 1W 1.8K	1	
R5732		VRE0034E432	M.RESISTOR CH 1/10W 4.3K	1	
R5733		VRE0034E103	M.RESISTOR CH 1/10W 10K	1	
R5734		ERJ3GEYJ101	M.RESISTOR CH 1/16W 100	1	

Ref.No.		Part No.	Part Name & Description	Pcs	Remarks
R5735		ERJ3GEY0R00	M.RESISTOR CH 1/16W 0	1	
R5737		ERJ3GEYJ820	M.RESISTOR CH 1/16W 82	1	
R5738		ERJ3GEYJ271	M.RESISTOR CH 1/16W 270	1	
R5739		ERJ3GEY0R00	M.RESISTOR CH 1/16W 0	1	
R5740		ERJ3GEYJ102	M.RESISTOR CH 1/16W 1K	1	
R5747,48		VRE0034E750	M.RESISTOR CH 1/10W 75	2	
R5749,50		ERJ3GEYJ101	M.RESISTOR CH 1/16W 100	2	
R5751		ERJ3GEYJ221	M.RESISTOR CH 1/16W 220	1	
R5752,53		ERJ3GEYJ330	M.RESISTOR CH 1/16W 33	2	
R5754-57		ERJ3GEYJ101	M.RESISTOR CH 1/16W 100	4	
R5759		ERJ3GEY0R00	M.RESISTOR CH 1/16W 0	1	
R5760		ERJ3GEYJ330	M.RESISTOR CH 1/16W 33	1	
R5761-64		ERJ3GEYJ101	M.RESISTOR CH 1/16W 100	4	
R5765,66		ERJ6GEYJ331	M.RESISTOR CH 1/10W 330	2	
R5767,68		ERJ3GEYJ560	M.RESISTOR CH 1/16W 56	2	
R5769,70		ERJ6GEYJ331	M.RESISTOR CH 1/10W 330	2	
R5771,72		ERJ3GEYJ560	M.RESISTOR CH 1/16W 56	2	
R5773-84		ERJ3GEY0R00	M.RESISTOR CH 1/16W 0	12	
R5801		VRE0034E121	M.RESISTOR CH 1/10W 120	1	
R5802		VRE0034E820	M.RESISTOR CH 1/10W 82	1	
R5803		ERG2SJ150	M.RESISTOR 2W 15	1	
R5804-06		ERJ3GEYJ103	M.RESISTOR CH 1/16W 10K	3	
R5808		ERJ3GEYJ473	M.RESISTOR CH 1/16W 47K	1	
R5809		ERJ3GEYJ103	M.RESISTOR CH 1/16W 10K	1	
R5810		ERJ3GEYJ100	M.RESISTOR CH 1/16W 10	1	
R5812		ERJ3GEYJ473	M.RESISTOR CH 1/16W 47K	1	
R5813		ERJ3GEYJ103	M.RESISTOR CH 1/16W 10K	1	
R5814		ERJ3GEYJ100	M.RESISTOR CH 1/16W 10	1	
R5816		ERJ3GEYJ473	M.RESISTOR CH 1/16W 47K	1	
R5817		ERJ3GEYJ103	M.RESISTOR CH 1/16W 10K	1	
R5818		ERJ3GEYJ100	M.RESISTOR CH 1/16W 10	1	
R5820		ERJ3GEYJ473	M.RESISTOR CH 1/16W 47K	1	
R5821		ERJ3GEYJ103	M.RESISTOR CH 1/16W 10K	1	
R5822		ERJ3GEYJ100	M.RESISTOR CH 1/16W 10	1	
R5824		ERJ3GEYJ473	M.RESISTOR CH 1/16W 47K	1	
R5825		ERJ3GEYJ103	M.RESISTOR CH 1/16W 10K	1	
R5826		ERJ3GEYJ100	M.RESISTOR CH 1/16W 10	1	
R5828		ERJ3GEYJ473	M.RESISTOR CH 1/16W 47K	1	
R5829		ERJ3GEYJ103	M.RESISTOR CH 1/16W 10K	1	
R5830		ERJ3GEYJ100	M.RESISTOR CH 1/16W 10	1	
R5832		ERJ3GEYJ473	M.RESISTOR CH 1/16W 47K	1	
R5833		ERJ3GEYJ103	M.RESISTOR CH 1/16W 10K	1	
R5834		ERJ3GEYJ100	M.RESISTOR CH 1/16W 10	1	
R5836		ERJ3GEYJ473	M.RESISTOR CH 1/16W 47K	1	
R5837		ERJ3GEYJ103	M.RESISTOR CH 1/16W 10K	1	
R5838		ERJ3GEYJ100	M.RESISTOR CH 1/16W 10	1	
R5840		ERJ3GEYJ473	M.RESISTOR CH 1/16W 47K	1	
R5841		ERJ3GEYJ103	M.RESISTOR CH 1/16W 10K	1	
R5842		ERJ3GEYJ100	M.RESISTOR CH 1/16W 10	1	
R5844		ERJ3GEYJ473	M.RESISTOR CH 1/16W 47K	1	
R5845		ERJ3GEYJ103	M.RESISTOR CH 1/16W 10K	1	
R5846		ERJ3GEYJ100	M.RESISTOR CH 1/16W 10	1	
R5848		ERJ3GEYJ473	M.RESISTOR CH 1/16W 47K	1	
R5849		ERJ3GEYJ103	M.RESISTOR CH 1/16W 10K	1	
R5850		ERJ3GEYJ100	M.RESISTOR CH 1/16W 10	1	
R5852		ERJ3GEYJ473	M.RESISTOR CH 1/16W 47K	1	
R5853		ERJ3GEYJ103	M.RESISTOR CH 1/16W 10K	1	
R5854		ERJ3GEYJ100	M.RESISTOR CH 1/16W 10	1	
R5855		ERJ3GEYJ272	M.RESISTOR CH 1/16W 2.7K	1	
R5856		ERJ3GEYJ222	M.RESISTOR CH 1/16W 2.2K	1	
R5857		ERJ3GEYJ103	M.RESISTOR CH 1/16W 10K	1	
R5858		ERJ3GEYJ273	M.RESISTOR CH 1/16W 27K	1	
R5859		ERJ3GEYJ103	M.RESISTOR CH 1/16W 10K	1	
R5860		ERJ3GEYJ100	M.RESISTOR CH 1/16W 10	1	
R5861		ERJ3GEYJ272	M.RESISTOR CH 1/16W 2.7K	1	
R5862		ERJ3GEYJ222	M.RESISTOR CH 1/16W 2.2K	1	
R5863		ERJ3GEYJ103	M.RESISTOR CH 1/16W 10K	1	
R5864		ERJ3GEYJ273	M.RESISTOR CH 1/16W 27K	1	
R5865		ERJ3GEYJ103	M.RESISTOR CH 1/16W 10K	1	
R5866		ERJ3GEYJ100	M.RESISTOR CH 1/16W 10	1	
R5867		ERJ3GEYJ272	M.RESISTOR CH 1/16W 2.7K	1	
R5868		ERJ3GEYJ222	M.RESISTOR CH 1/16W 2.2K	1	
R5869		ERJ3GEYJ103	M.RESISTOR CH 1/16W 10K	1	
R5870		ERJ3GEYJ273	M.RESISTOR CH 1/16W 27K	1	
R5871		ERJ3GEYJ103	M.RESISTOR CH 1/16W 10K	1	

Ref.No.		Part No.	Part Name & Description	Pcs	Remarks
R5872		ERJ3GEYJ100	M.RESISTOR CH 1/16W 10	1	
R5873		ERJ3GEYJ272	M.RESISTOR CH 1/16W 2.7K	1	
R5874		ERJ3GEYJ222	M.RESISTOR CH 1/16W 2.2K	1	
R5875		ERJ3GEYJ103	M.RESISTOR CH 1/16W 10K	1	
R5876		ERJ3GEYJ273	M.RESISTOR CH 1/16W 27K	1	
R5877		ERJ3GEYJ103	M.RESISTOR CH 1/16W 10K	1	
R5878		ERJ3GEYJ100	M.RESISTOR CH 1/16W 10	1	
R5879		ERJ3GEYJ103	M.RESISTOR CH 1/16W 10K	1	
R5880		ERJ3GEYJ183	M.RESISTOR CH 1/16W 18K	1	
R5881-93		ERJ3GEYJ103	M.RESISTOR CH 1/16W 10K	13	
R5894		ERJ3GEYJ472	M.RESISTOR CH 1/16W 4.7K	1	
R5895		ERJ3GEYJ103	M.RESISTOR CH 1/16W 10K	1	
R5896		ERJ3GEYJ472	M.RESISTOR CH 1/16W 4.7K	1	
R5897		ERJ3GEYJ103	M.RESISTOR CH 1/16W 10K	1	
R5898		ERJ3GEYJ472	M.RESISTOR CH 1/16W 4.7K	1	
R5899		ERJ3GEYJ103	M.RESISTOR CH 1/16W 10K	1	
R5900		ERJ3GEYJ472	M.RESISTOR CH 1/16W 4.7K	1	
TP5001,02		VJR0646	TEST POINT	2	
TP5301,02		VJR0646	TEST POINT	2	
TP5601-05		VJR0646	TEST POINT	5	
TP5701-05		VJR0646	TEST POINT	5	
TP5801-06		VJR0646	TEST POINT	6	
TPG5001,02		VJR0646	TEST POINT	2	
TPG5301,02		VJR0646	TEST POINT	2	
TPG5601		VJR0646	TEST POINT	1	
TPG5701		VJR0646	TEST POINT	1	
TPG5801		VJR0646	TEST POINT	1	
VC5601		ECV1ZW20X53T	V.CAPACITOR 20P	1	
VC5701		ECV1ZW20X53T	V.CAPACITOR 20P	1	
VL5001		EIV7EL068B	TRANSFORMER	1	
VL5002		EIV7EL073B	TRANSFORMER	1	
VL5003		EIV7EL072B	TRANSFORMER	1	
VL5301		EIV7EL068B	TRANSFORMER	1	
VL5302		EIV7EL073B	TRANSFORMER	1	
VL5303		EIV7EL072B	TRANSFORMER	1	
VL5601		VLQ0547	COIL	1	
VL5701		VLQ0547	COIL	1	
VR5001		VRV0113B101	V.RESISTOR 100	1	
VR5003		VRV0113B101	V.RESISTOR 100	1	
VR5301		VRV0113B101	V.RESISTOR 100	1	
VR5303		VRV0113B101	V.RESISTOR 100	1	
VR5601		VRV0113B101	V.RESISTOR 100	1	
VR5701		VRV0113B101	V.RESISTOR 100	1	
			MISCELLANEOUS		
		VML2143	LEVER. ARM.	1	
		VML2144	LEVER. ARM.	1	
		VSC1381	HEAT SINK	2	
		VSC1382	HEAT SINK	2	
		VSC3626	HEAT SINK	4	
		VXA4420	P.C.BOARD SHIELD PLATE	1	
		XTV3+6FFR	SCREW	5	

S3 TC/CUE VEP86123A
S3 SUB TC/CUE SUB VEP86124A

S3

S3 SUB

Ref.No.		Part No.	Part Name & Description	Pcs	Remarks
S3	■	VEP86123A	P.C.BOARD W/COMPONENT		
			TC/CUE		
S3 SUB	■	VEP86124A	P.C.BOARD W/COMPONENT		FOR VEP86123A
			TC/CUE SUB		
			CAPACITORS		
C6001		ECEV1EV100	E.CAPACITOR 25V 10U	1	
C6001		ECUX1H103ZFV	C.CAPACITOR CH 50V 0.01U	1	
C6002		ECEV1EV100	E.CAPACITOR 25V 10U	1	
C6003		ECEV1CV220	E.CAPACITOR 16V 22U	1	
C6003		ECUX1H103ZFV	C.CAPACITOR CH 50V 0.01U	1	
C6004		ECEV1EV100	E.CAPACITOR 25V 10U	1	
C6004		ECUX1H103ZFV	C.CAPACITOR CH 50V 0.01U	1	
C6005		ECEV1EV100	E.CAPACITOR 25V 10U	1	
C6005		ECUX1H103ZFV	C.CAPACITOR CH 50V 0.01U	1	
C6006		ECEV1CV220	E.CAPACITOR 16V 22U	1	
C6007,08		ECEV1EV100	E.CAPACITOR 25V 10U	2	
C6009		ECEV1CV220	E.CAPACITOR 16V 22U	1	
C6010,11		ECEV1EV100	E.CAPACITOR 25V 10U	2	
C6012		ECEV1CV220	E.CAPACITOR 16V 22U	1	
C6012		ECUX1H103ZFV	C.CAPACITOR CH 50V 0.01U	1	
C6013		ECEV1EV100	E.CAPACITOR 25V 10U	1	
C6013		ECUX1H103ZFV	C.CAPACITOR CH 50V 0.01U	1	
C6014		ECEV1EV100	E.CAPACITOR 25V 10U	1	
C6014		ECUX1H103ZFV	C.CAPACITOR CH 50V 0.01U	1	
C6015		ECEV1CV220	E.CAPACITOR 16V 22U	1	
C6015		ECUX1H103ZFV	C.CAPACITOR CH 50V 0.01U	1	
C6016		ECEV1CV470	E.CAPACITOR 16V 47U	1	
C6016		ECUX1H103ZFV	C.CAPACITOR CH 50V 0.01U	1	
C6017		ECEV1CV470	E.CAPACITOR 16V 47U	1	
C6017		ECUX1H103ZFV	C.CAPACITOR CH 50V 0.01U	1	
C6018		ECUM1H103ZFN	C.CAPACITOR CH 50V 0.01U	1	
C6018		ECUX1H103ZFV	C.CAPACITOR CH 50V 0.01U	1	
C6019		ECUM1H103ZFN	C.CAPACITOR CH 50V 0.01U	1	
C6019		ECUX1H103ZFV	C.CAPACITOR CH 50V 0.01U	1	
C6020		ECEV1CV470	E.CAPACITOR 16V 47U	1	
C6020		ECUX1H103ZFV	C.CAPACITOR CH 50V 0.01U	1	
C6021		ECUM1H103ZFN	C.CAPACITOR CH 50V 0.01U	1	
C6021		ECUX1H103ZFV	C.CAPACITOR CH 50V 0.01U	1	
C6022		ECUM1H103ZFN	C.CAPACITOR CH 50V 0.01U	1	
C6022		ECUX1H103ZFV	C.CAPACITOR CH 50V 0.01U	1	
C6023		ECEV1CV470	E.CAPACITOR 16V 47U	1	
C6023-30		ECUX1H103ZFV	C.CAPACITOR CH 50V 0.01U	8	
C6031		ECA1HXS010	E.CAPACITOR 50V 1U	1	
C6031,32		ECUM1H103ZFN	C.CAPACITOR CH 50V 0.01U	2	
C6032		ECUX1H103ZFV	C.CAPACITOR CH 50V 0.01U	1	
C6033		ECEV1CV470	E.CAPACITOR 16V 47U	1	
C6033		ECUX1H103ZFV	C.CAPACITOR CH 50V 0.01U	1	
C6034		ECEV1EV100	E.CAPACITOR 25V 10U	1	
C6034,35		ECUX1H103ZFV	C.CAPACITOR CH 50V 0.01U	2	
C6035		ECUM1H472KBN	C.CAPACITOR CH 50V 4700P	1	
C6036		ECEV1CV470	E.CAPACITOR 16V 47U	1	
C6036,37		ECUX1H103ZFV	C.CAPACITOR CH 50V 0.01U	2	
C6037		ECUM1H472KBN	C.CAPACITOR CH 50V 4700P	1	
C6038		ECEV1EV100	E.CAPACITOR 25V 10U	1	
C6038,39		ECUX1H103ZFV	C.CAPACITOR CH 50V 0.01U	2	
C6039		ECUM1H472KBN	C.CAPACITOR CH 50V 4700P	1	
C6040		ECEV1CV470	E.CAPACITOR 16V 47U	1	
C6041		ECUX1H103ZFV	C.CAPACITOR CH 50V 0.01U	1	
C6041		ECUM1H472KBN	C.CAPACITOR CH 50V 4700P	1	
C6042		ECUM1E224ZFN	C.CAPACITOR CH 25V 0.22U	1	
C6042		ECUM1H220JCN	C.CAPACITOR CH 50V 22P	1	
C6043		ECUX1H103ZFV	C.CAPACITOR CH 50V 0.01U	1	
C6043		ECUM1H220JCN	C.CAPACITOR CH 50V 22P	1	
C6044		ECA1HXS010	E.CAPACITOR 50V 1U	1	
C6044		ECUM1H103ZFN	C.CAPACITOR CH 50V 0.01U	1	
C6045		ECA1EXS330	E.CAPACITOR 25V 33U	1	
C6045		ECUM1H103ZFN	C.CAPACITOR CH 50V 0.01U	1	
C6046		ECA1EXS330	E.CAPACITOR 25V 33U	1	
C6046		ECUM1H103ZFN	C.CAPACITOR CH 50V 0.01U	1	
C6047		ECA1CXS100	E.CAPACITOR 16V 10U	1	

Ref.No.		Part No.	Part Name & Description	Pcs	Remarks
C6047,48		ECUM1H103ZFN	C.CAPACITOR CH 50V 0.01U	2	
C6048		ECUX1H103ZFV	C.CAPACITOR CH 50V 0.01U	1	
C6049,50		ECUM1H103ZFN	C.CAPACITOR CH 50V 0.01U	2	
C6051-54		ECEV1EV100	E.CAPACITOR 25V 10U	4	
C6055,56		ECUM1H103ZFN	C.CAPACITOR CH 50V 0.01U	2	
C6058,59		ECUX1H330JCV	C.CAPACITOR 50V 33P	2	
C6070		ECUX1H103ZFV	C.CAPACITOR CH 50V 0.01U	1	
C6071		ECA1VXKN4R7	E.CAPACITOR 35V 4.7U	1	
C6072		ECA1CXS100	E.CAPACITOR 16V 10U	1	
C6073		ECA1VXKN4R7	E.CAPACITOR 35V 4.7U	1	
C6074		ECUX1H120JCV	C.CAPACITOR CH 50V 12P	1	
C6075		ECUX1H121JCV	C.CAPACITOR 50V 120P	1	
C6076		ECUX1H222KBV	C.CAPACITOR CH 50V 2200P	1	
C6077		ECA1CXS100	E.CAPACITOR 16V 10U	1	
C6078		ECA1VXKN4R7	E.CAPACITOR 35V 4.7U	1	
C6079		ECA1CXS100	E.CAPACITOR 16V 10U	1	
C6080		ECUX1H103ZFV	C.CAPACITOR CH 50V 0.01U	1	
C6081		ECA1VXKN4R7	E.CAPACITOR 35V 4.7U	1	
C6082		ECUX1H103ZFV	C.CAPACITOR CH 50V 0.01U	1	
C6083,84		ECA1VXKN4R7	E.CAPACITOR 35V 4.7U	2	
C6085,86		ECUX1H150JCV	C.CAPACITOR 50V 15P	2	
C6087,88		ECUX1H180JCV	C.CAPACITOR 50V 18P	2	
C6091,92		ECUX1H103ZFV	C.CAPACITOR CH 50V 0.01U	2	
C6095		ECA1AXS680	E.CAPACITOR 10V 68U	1	
C6100,01		ECUX1H470JCV	C.CAPACITOR 50V 47P	2	
C6102		ECUX1H103ZFV	C.CAPACITOR CH 50V 0.01U	1	
C6301		ECA1VXK470F	E.CAPACITOR 35V 47U	1	
C6302		ECUX1H103ZFV	C.CAPACITOR CH 50V 0.01U	1	
C6303		ECA1VXK470F	E.CAPACITOR 35V 47U	1	
C6304,05		ECUX1H103KBV	C.CAPACITOR CH 50V 0.01U	2	
C6306		ECQB1H103JF	P.CAPACITOR 50V 0.01U	1	
C6307		ECQB1H682JF	P.CAPACITOR 50V 6800P	1	
C6308		ECA1VXK470F	E.CAPACITOR 35V 47U	1	
C6309,10		ECUX1H152KBV	C.CAPACITOR CH 50V 1500P	2	
C6311		ECQB1H682JF	P.CAPACITOR 50V 6800P	1	
C6312		ECA1HXK330	E.CAPACITOR 50V 33U	1	
C6313		ECA1HXK220F	E.CAPACITOR 50V 22U	1	
C6314		ECA1EXLV101X	E.CAPACITOR 25V 100P	1	
C6315		ECUX1H103KBV	C.CAPACITOR CH 50V 0.01U	1	
C6316		ECA1HXK220F	E.CAPACITOR 50V 22U	1	
C6317,18		ECUX1H103KBV	C.CAPACITOR CH 50V 0.01U	2	
C6319		ECA1HXK330	E.CAPACITOR 50V 33U	1	
C6320		VCF2JAB222JE	P.CAPACITOR V	1	
C6321		ECA1HXS010	E.CAPACITOR 50V 1U	1	
C6322		ECA1HXKN010	E.CAPACITOR 50V 1U	1	
C6323,24		ECUX1H103KBV	C.CAPACITOR CH 50V 0.01U	2	
C6325		ECA1HXK330	E.CAPACITOR 50V 33U	1	
C6326		VCF2JAB182JE	P.CAPACITOR V	1	
C6327		ECUM1E104KBN	C.CAPACITOR 25V 0.1U	1	
C6328		ECA1HXS010	E.CAPACITOR 50V 1U	1	
C6329		ECA1HXKN010	E.CAPACITOR 50V 1U	1	
C6330,31		ECUX1H103KBV	C.CAPACITOR CH 50V 0.01U	2	
C6332		ECA1HXK330	E.CAPACITOR 50V 33U	1	
C6333		VCF2JAB222JE	P.CAPACITOR V	1	
C6334		ECUM1E104KBN	C.CAPACITOR 25V 0.1U	1	
C6335		ECA1HXS010	E.CAPACITOR 50V 1U	1	
C6336		ECA1HXKN010	E.CAPACITOR 50V 1U	1	
C6337,38		ECUX1H103KBV	C.CAPACITOR CH 50V 0.01U	2	
C6339		ECA1HXK330	E.CAPACITOR 50V 33U	1	
C6340		VCF2JAB222JE	P.CAPACITOR V	1	
C6341		ECUM1E104KBN	C.CAPACITOR 25V 0.1U	1	
C6342		ECA1HXS010	E.CAPACITOR 50V 1U	1	
C6343		ECA1HXKN010	E.CAPACITOR 50V 1U	1	
C6344,45		ECUX1H103KBV	C.CAPACITOR CH 50V 0.01U	2	
C6346		ECA1HXK330	E.CAPACITOR 50V 33U	1	
C6347		ECCD2H181J	C.CAPACITOR 500V 180P	1	
C6348		ECCD2H680J	C.CAPACITOR 500V 68P	1	
C6349		ECA1HXS010	E.CAPACITOR 50V 1U	1	
C6350		ECA1HXKN010	E.CAPACITOR 50V 1U	1	
C6351,52		ECUX1H103KBV	C.CAPACITOR CH 50V 0.01U	2	
C6353		ECA1HXK330	E.CAPACITOR 50V 33U	1	
C6354		ECCD2H181J	C.CAPACITOR 500V 180P	1	
C6355		ECCD2H271J	C.CAPACITOR 500V 270P	1	
C6356		ECA1HXS010	E.CAPACITOR 50V 1U	1	
C6357		ECUM1E104KBN	C.CAPACITOR 25V 0.1U	1	

Ref.No.	Part No.	Part Name & Description	Pcs	Remarks
C6358	ECA1HXS010	E.CAPACITOR 50V 1U	1	
C6359	ECUM1E104KBN	C.CAPACITOR 25V 0.1U	1	
C6361,62	ECA1HXS010	E.CAPACITOR 50V 1U	2	
C6363	ECA1HXS100	E.CAPACITOR 50V 10U	1	
C6364	ECA1HXS2R2	E.CAPACITOR 50V 2.2U	1	
C6365	ECA1CXLV221X	E.CAPACITOR 16V 220P	1	
C6366-68	ECUX1C104ZFV	C.CAPACITOR CH 16V 0.1U	3	
C6369	ECA1CXK101F	.CAPACITOR V	1	
C6370	ECA1CXLV221X	E.CAPACITOR 16V 220P	1	
C6371-73	ECUX1C104ZFV	C.CAPACITOR CH 16V 0.1U	3	
C6374	ECA1CXK101F	.CAPACITOR V	1	
C6375,76	ECA1HXS100	E.CAPACITOR 50V 10U	2	
C6377-80	ECA1CXKN100	E.CAPACITOR 16V 10U	4	
C6381,82	ECA1CXS470	E.CAPACITOR 16V 47U	2	
C6383	ECUX1H220JCV	C.CAPACITOR CH 50V 22P	1	
C6384,85	ECA1CXKN100	E.CAPACITOR 16V 10U	2	
C6386	ECA1EXKN220	E.CAPACITOR 25V 22U	1	
C6387	ECUX1H103KBV	C.CAPACITOR CH 50V 0.01U	1	
C6388	ECUX1H472KBV	C.CAPACITOR 50V 4700P	1	
C6390	ECA1CXKN100	E.CAPACITOR 16V 10U	1	
C6391	ECUX1H102KBV	C.CAPACITOR 50V 1000P	1	
C6392	ECA1CXS470	E.CAPACITOR 16V 47U	1	
C6393	ECUX1H181JCV	C.CAPACITOR 50V 180P	1	
C6394	ECUX1H820JCV	C.CAPACITOR CH 50V 82P	1	
C6395,96	ECA1CXK101F	.CAPACITOR V	2	
C6397	ECA1CXLV221X	E.CAPACITOR 16V 220P	1	
C6398	ECUX1H470JCV	C.CAPACITOR 50V 47P	1	
C6399	ECQB1H473JF	P.CAPACITOR 50V 0.047U	1	
C6400	ECA1CXKN100	E.CAPACITOR 16V 10U	1	
C6401	ECUX1H562KBV	C.CAPACITOR 50V 5600P	1	
C6402	ECA1CXKN100	E.CAPACITOR 16V 10U	1	
C6403	ECUX1H220JCV	C.CAPACITOR CH 50V 22P	1	
C6404	ECA1CXKN100	E.CAPACITOR 16V 10U	1	
C6405	ECA1EXKN220	E.CAPACITOR 25V 22U	1	
C6406	ECUX1H181JCV	C.CAPACITOR 50V 180P	1	
C6407	ECUX1H820JCV	C.CAPACITOR CH 50V 82P	1	
C6408	ECUX1H470JCV	C.CAPACITOR 50V 47P	1	
C6409	ECQB1H473JF	P.CAPACITOR 50V 0.047U	1	
C6410	ECA1CXKN100	E.CAPACITOR 16V 10U	1	
C6411	ECUX1H562KBV	C.CAPACITOR 50V 5600P	1	
C6412,13	ECA1CXK101F	.CAPACITOR V	2	
C6414	ECA1CXKN100	E.CAPACITOR 16V 10U	1	
C6415	ECA1HXS100	E.CAPACITOR 50V 10U	1	
C6416	ECUX1H153KBV	C.CAPACITOR CH 50V 0.015U	1	
C6420,21	ECUX1H103ZFV	C.CAPACITOR CH 50V 0.01U	2	
C6422	ECA1EXKN220	E.CAPACITOR 25V 22U	1	
C6423	ECUX1H470JCV	C.CAPACITOR 50V 47P	1	
C6424,25	ECA1CXS100	E.CAPACITOR 16V 10U	2	
C6426	ECA1CXLV221X	E.CAPACITOR 16V 220P	1	
C6427,28	ECUX1H103ZFV	C.CAPACITOR CH 50V 0.01U	2	
C6429	ECUX1H470JCV	C.CAPACITOR 50V 47P	1	
C6430,31	ECA1CXS100	E.CAPACITOR 16V 10U	2	
C6432	ECA1CXLV221X	E.CAPACITOR 16V 220P	1	
C6435,36	ECUX1H103ZFV	C.CAPACITOR CH 50V 0.01U	2	
C6437	ECA1CXK101F	.CAPACITOR V	1	
C6440,41	ECUX1H103ZFV	C.CAPACITOR CH 50V 0.01U	2	
C6442	ECA1CXK101F	.CAPACITOR V	1	
C6451	ECA1HXS010	E.CAPACITOR 50V 1U	1	
C6452	ECA1HXS2R2	E.CAPACITOR 50V 2.2U	1	
C6453-55	ECA1VXKN4R7	E.CAPACITOR 35V 4.7U	3	
C6456	ECA1HXS100	E.CAPACITOR 50V 10U	1	
C6457	ECA1HXK330	E.CAPACITOR 50V 33U	1	
C6458	ECUX1H560JCV	C.CAPACITOR 50V 56P	1	
C6459	ECUX1H102KBV	C.CAPACITOR 50V 1000P	1	
C6460	ECA1CXLV221X	E.CAPACITOR 16V 220P	1	
C6461	ECUX1H103KBV	C.CAPACITOR CH 50V 0.01U	1	
C6462	ECA1HXKN010	E.CAPACITOR 50V 1U	1	
C6463	ECA1CXK101F	.CAPACITOR V	1	
C6464	ECUM1E104KBN	C.CAPACITOR 25V 0.1U	1	
C6465	ECA1HXS100	E.CAPACITOR 50V 10U	1	
C6466	ECUX1H682KBV	C.CAPACITOR CH 50V 6800P	1	
C6467	ECUX1H822KBV	C.CAPACITOR CH 50V 8200P	1	
C6468,69	ECA1CXS470	E.CAPACITOR 16V 47U	2	
C6470	ECA1EXKN220	E.CAPACITOR 25V 22U	1	
C6471,72	ECA1CXS470	E.CAPACITOR 16V 47U	2	

Ref.No.	Part No.	Part Name & Description	Pcs	Remarks
C6473	ECA1VXKN4R7	E.CAPACITOR 35V 4.7U	1	
C6474	ECUX1H470JCV	C.CAPACITOR 50V 47P	1	
C6475,76	ECA1CXS470	E.CAPACITOR 16V 47U	2	
C6477	ECA1EXKN220	E.CAPACITOR 25V 22U	1	
C6478	ECA1HXS100	E.CAPACITOR 50V 10U	1	
C6479	ECA1HXK330	E.CAPACITOR 50V 33U	1	
C6480	ECUX1H560JCV	C.CAPACITOR 50V 56P	1	
C6481	ECUX1H102KBV	C.CAPACITOR 50V 1000P	1	
C6482	ECA1CXLV221X	E.CAPACITOR 16V 220P	1	
C6483	ECUX1H103KBV	C.CAPACITOR CH 50V 0.01U	1	
C6484	ECA1HXKN010	E.CAPACITOR 50V 1U	1	
C6485	ECA1CXK101F	.CAPACITOR V	1	
C6486	ECUM1E104KBN	C.CAPACITOR 25V 0.1U	1	
C6487	ECA1HXS100	E.CAPACITOR 50V 10U	1	
C6488	ECUX1H682KBV	C.CAPACITOR CH 50V 6800P	1	
C6489	ECUX1H822KBV	C.CAPACITOR CH 50V 8200P	1	
C6490,91	ECA1CXS470	E.CAPACITOR 16V 47U	2	
C6492	ECA1EXKN220	E.CAPACITOR 25V 22U	1	
C6493,94	ECA1CXS470	E.CAPACITOR 16V 47U	2	
C6495	ECA1VXKN4R7	E.CAPACITOR 35V 4.7U	1	
C6498,99	ECUX1H103ZFV	C.CAPACITOR CH 50V 0.01U	2	
C6500	ECA1CXK101F	.CAPACITOR V	1	
C6503,04	ECUX1H103ZFV	C.CAPACITOR CH 50V 0.01U	2	
C6505	ECA1CXK101F	.CAPACITOR V	1	
D6001-04	OA95	DIODE	4	
D6005	MA153	DIODE	1	
D6005-09	OA95	DIODE	5	
D6010	MA157	DIODE	1	
D6010	OA95	DIODE	1	
D6011	MA157	DIODE	1	
D6301	MA3100	DIODE	1	
D6302	MA151K	DIODE	1	
D6303	MA157	DIODE	1	
D6304,05	MA151WK	DIODE	2	
D6306-12	MA151K	DIODE	7	
D6313-15	MA151WK	DIODE	3	
D6316-19	MA157	DIODE	4	
D6320-22	MA151K	DIODE	3	
D6323,24	MA151WK	DIODE	2	
D6325-27	MA157	DIODE	3	
FL6001,02	VLF0928	FILTER	2	
FL6003-05	VLF0931	COIL	3	
FL6301	VLF0829	FILTER	1	
FL6302	VLQ0190	COIL 4.7MH	1	
FL6303	VLQ0402	COIL	1	
FL6304,05	EIR7QH007Q	FILTER	2	
FL6306	VLF0829	FILTER	1	
FL6307,08	VLF0931	COIL	2	
FL6311	VLQ0402	COIL	1	
FL6312,13	EIR7QG010B	IF TRANSFORMER	2	
IC6001	UPC451G2	IC	1	
IC6001	UPD78C10GF	IC	1	
IC6002	UPC339G2	IC	1	
IC6003	M27C256-15F1	IC	1	
IC6003	NJM4558M	IC	1	
IC6004	MC74HC573AF	IC	1	
IC6004	NJM2903M	IC	1	
IC6005	AN78N12	IC	1	
IC6005	MC74HC138AF	IC	1	
IC6006	AN79N12	IC	1	
IC6007	NJM78L05UA	IC	1	
IC6008-11	NJM4558M	IC	4	
IC6012	MC74HC74AF	IC	1	
IC6012	MN8305S	IC	1	
IC6013	MC10H125M	IC	1	
IC6013	MC74HC00AF	IC	1	

Ref.No.		Part No.	Part Name & Description	Pcs	Remarks
IC6014		MCM514256AP8	IC	1	
IC6014		MC74HC32AF	IC	1	
IC6015		MB621926	IC	1	
IC6015		MN51040VPI	IC	1	
IC6016		MC74HC138AF	IC	1	
IC6016		MC74HC4053F	IC	1	
IC6017		MC74HC541F	IC	1	
IC6018		MC74HC4053F	IC	1	
IC6019		UPC4741G2	IC	1	
IC6020		UPC319G2	IC	1	
IC6021		NJM2068MD	IC	1	
IC6022		NJM4560MD	IC	1	
IC6023		MB8421-90LPF	IC	1	
IC6024		MB89363BPF	IC	1	
IC6025		MC74HC138AF	IC	1	
IC6026		TC7SU04F	IC	1	
IC6027-29		MC74HC4050F	IC	3	
IC6030		NJM78L05UA	IC	1	
IC6031		NJM79L05UA	IC	1	
IC6032		NJM2904M	IC	1	
IC6033		MM74HC221AMX	IC	1	
IC6034		MC74HC04AF	IC	1	
IC6035		MC74HC4053F	IC	1	
IC6036,37		MC74HC08AF	IC	2	
IC6038,39		UPD71054GB	IC	2	
IC6041		MC74HC32AF	IC	1	
IC6042		TL317LP	IC	1	
IC6043		NJM78L12UA	IC	1	
IC6044		NJM79L12UA	IC	1	
IC6045		MC74HC4053F	IC	1	
IC6301		MC14011BF	IC	1	
IC6302		MC14538BF	IC	1	
IC6303,04		NJM4580ED	IC	2	
IC6305		NJM4558M	IC	1	
IC6306		M5206P	IC	1	
IC6307,08		NJM4558M	IC	2	
IC6309		AN6558S	IC	1	
IC6310		NJM4558M	IC	1	
IC6311		AN6558S	IC	1	
IC6312		NJM4558M	IC	1	
IC6313		MN6631A	IC	1	
IC6314		AN78N12	IC	1	
IC6315		AN79N12	IC	1	
IC6316		NJM4558M	IC	1	
IC6317		NJM2043MD	IC	1	
IC6318		AN78N12	IC	1	
IC6319		AN79N12	IC	1	
IC6320		NJM4558M	IC	1	
IC6321		BA301	IC	1	
IC6322,23		LM318PS	IC	2	
IC6324		MN6631A	IC	1	
IC6325		LM318PS	IC	1	
IC6326		BA301	IC	1	
IC6327,28		LM318PS	IC	2	
IC6329		AN78N12	IC	1	
IC6330		AN79N12	IC	1	
ICS3		VJS2336A028	CONNECTOR (FEMALE)	1	
L6010,11		VLQ0576	COIL	2	
L6301-07		VLQEL06F470K	COIL 47UH	7	
P005,06		VJP3454B096	CONNECTOR (MALE)	2	
P6101		VJP2983A020	CONNECTOR (MALE)	1	
P6101		VJS2983A020	CONNECTOR (FEMALE)	1	
P6102		VJP2983A010	CONNECTOR (MALE)	1	
P6102		VJS2983A010	CONNECTOR (FEMALE)	1	
P6103		VJP2983A007	CONNECTOR (MALE)	1	
P6103		VJS2983A007	CONNECTOR (FEMALE)	1	
P6301		VJP1230T	CONNECTOR (MALE) 3P	1	
P6302		VJP1230G	CONNECTOR (MALE) 3P	1	
P6303		VJP1230R	CONNECTOR (MALE) 3P	1	

Ref.No.		Part No.	Part Name & Description	Pcs	Remarks
P6304		VJP1230T	CONNECTOR (MALE) 3P	1	
P6305		VJP1230G	CONNECTOR (MALE) 3P	1	
P6306		VJP1230R	CONNECTOR (MALE) 3P	1	
Q6001-05		2SD601-R	TRANSISTOR CHIP	5	(Q,R)
Q6006		UN2213	TRANSISTOR-RESISTOR	1	
Q6010		2SK198	TRANSISTOR CHIP	1	(Q,R,S)
Q6011		UN2213	TRANSISTOR-RESISTOR	1	
Q6020-39		UN2213	TRANSISTOR-RESISTOR	20	
Q6301		2SC1847-R	TRANSISTOR	1	(Q,R)
Q6302		2SD602-R	TRANSISTOR	1	
Q6303		2SB710-R	TRANSISTOR CHIP	1	(R)
Q6304		2SD602-R	TRANSISTOR	1	
Q6305		UN2213	TRANSISTOR-RESISTOR	1	
Q6306-08		2SC1318-R	TRANSISTOR	3	
Q6309,10		UN2213	TRANSISTOR-RESISTOR	2	
Q6311		2SB710-R	TRANSISTOR CHIP	1	(R)
Q6312		UN2213	TRANSISTOR-RESISTOR	1	
Q6313		2SB710-R	TRANSISTOR CHIP	1	(R)
Q6314,15		2SD1994A-QR	TRANSISTOR	2	
Q6316		2SD602-R	TRANSISTOR	1	
Q6317		2SB710-R	TRANSISTOR CHIP	1	(R)
Q6318,19		2SD1994A-QR	TRANSISTOR	2	
Q6320		2SD602-R	TRANSISTOR	1	
Q6321		2SB710-R	TRANSISTOR CHIP	1	(R)
Q6322,23		2SD1328-R	TRANSISTOR CHIP	2	(Q,R)
Q6324		2SB710-R	TRANSISTOR CHIP	1	(R)
Q6325,26		2SD1994A-QR	TRANSISTOR	2	
Q6327		2SD602-R	TRANSISTOR	1	
Q6328		2SB710-R	TRANSISTOR CHIP	1	(R)
Q6329,30		2SD1328-R	TRANSISTOR CHIP	2	(Q,R)
Q6331		2SB710-R	TRANSISTOR CHIP	1	(R)
Q6332,33		2SD1994A-QR	TRANSISTOR	2	
Q6334		2SD602-R	TRANSISTOR	1	
Q6335		2SB710-R	TRANSISTOR CHIP	1	(R)
Q6336,37		2SD1328-R	TRANSISTOR CHIP	2	(Q,R)
Q6338		2SB710-R	TRANSISTOR CHIP	1	(R)
Q6339,40		2SD1994A-QR	TRANSISTOR	2	
Q6341		2SD602-R	TRANSISTOR	1	
Q6342		2SB710-R	TRANSISTOR CHIP	1	(R)
Q6343,44		2SD1994A-QR	TRANSISTOR	2	
Q6345		2SD602-R	TRANSISTOR	1	
Q6346-48		UN2213	TRANSISTOR-RESISTOR	3	
Q6349,50		2SD602-R	TRANSISTOR	2	
Q6351		UN2213	TRANSISTOR-RESISTOR	1	
Q6352		2SD602-R	TRANSISTOR	1	
Q6353		UN2113	TRANSISTOR-RESISTOR	1	
Q6354,55		UN2213	TRANSISTOR-RESISTOR	2	
Q6356-58		2SD602-R	TRANSISTOR	3	
Q6359,60		2SD1149-R	TRANSISTOR	2	
Q6361		2SA1018-R	TRANSISTOR	1	(R)
Q6363-66		UN2213	TRANSISTOR-RESISTOR	4	
Q6367		2SD602-R	TRANSISTOR	1	
Q6368		2SB710-R	TRANSISTOR CHIP	1	(R)
Q6369		UN2213	TRANSISTOR-RESISTOR	1	
Q6370		2SD602-R	TRANSISTOR	1	
Q6371		2SD1994A-QR	TRANSISTOR	1	
Q6372		2SB1322A-QR	TRANSISTOR	1	
Q6373		2SD1994A-QR	TRANSISTOR	1	
Q6374		2SB1322A-QR	TRANSISTOR	1	
Q6375-77		2SD602-R	TRANSISTOR	3	
Q6378,79		UN2213	TRANSISTOR-RESISTOR	2	
Q6380		2SD602-R	TRANSISTOR	1	
Q6381,82		2SD1149-R	TRANSISTOR	2	
Q6383		2SA1018-R	TRANSISTOR	1	(R)
Q6384,85		2SD602-R	TRANSISTOR	2	
Q6391		UN2213	TRANSISTOR-RESISTOR	1	
Q6392		2SD602-R	TRANSISTOR	1	
Q6400		UN2213	TRANSISTOR-RESISTOR	1	
			RESISTORS		

Ref.No.		Part No.	Part Name & Description	Pcs	Remarks
R6001		ERJ6GEYJ103	M.RESISTOR CH 1/10W 10K	1	
R6002		ERJ6GEYJ272	M.RESISTOR CH 1/10W 2.7K	1	
R6003		ERJ6GEYJ153	M.RESISTOR CH 1/10W 15K	1	
R6004		ERJ6GEYJ221	M.RESISTOR CH 1/10W 220	1	
R6005		ERJ6GEYJ103	M.RESISTOR CH 1/10W 10K	1	
R6006		ERJ6GEYJ153	M.RESISTOR CH 1/10W 15K	1	
R6007		ERJ6GEYJ562	M.RESISTOR CH 1/10W 5.6K	1	
R6008		ERJ6GEYJ103	M.RESISTOR CH 1/10W 10K	1	
R6009		ERJ6GEYJ272	M.RESISTOR CH 1/10W 2.7K	1	
R6010		ERJ6GEYJ153	M.RESISTOR CH 1/10W 15K	1	
R6011		ERJ6GEYJ221	M.RESISTOR CH 1/10W 220	1	
R6012		ERJ6GEYJ103	M.RESISTOR CH 1/10W 10K	1	
R6013		ERJ6GEYJ153	M.RESISTOR CH 1/10W 15K	1	
R6014		ERJ6GEYJ562	M.RESISTOR CH 1/10W 5.6K	1	
R6015		ERJ6GEYJ103	M.RESISTOR CH 1/10W 10K	1	
R6016		ERJ6GEYJ272	M.RESISTOR CH 1/10W 2.7K	1	
R6017		ERJ6GEYJ153	M.RESISTOR CH 1/10W 15K	1	
R6018		ERJ6GEYJ221	M.RESISTOR CH 1/10W 220	1	
R6019		ERJ6GEYJ103	M.RESISTOR CH 1/10W 10K	1	
R6020		ERJ6GEYJ153	M.RESISTOR CH 1/10W 15K	1	
R6021		ERJ6GEYJ562	M.RESISTOR CH 1/10W 5.6K	1	
R6022		ERJ6GEYJ103	M.RESISTOR CH 1/10W 10K	1	
R6023		ERJ3GEYJ103	M.RESISTOR CH 1/16W 10K	1	
R6023		ERJ6GEYJ272	M.RESISTOR CH 1/10W 2.7K	1	
R6024		ERJ3GEYJ103	M.RESISTOR CH 1/16W 10K	1	
R6024		ERJ6GEYJ153	M.RESISTOR CH 1/10W 15K	1	
R6025		ERJ3GEYJ473	M.RESISTOR CH 1/16W 47K	1	
R6025		ERJ6GEYJ221	M.RESISTOR CH 1/10W 220	1	
R6026		ERJ3GEYJ473	M.RESISTOR CH 1/16W 47K	1	
R6026		ERJ6GEYJ103	M.RESISTOR CH 1/10W 10K	1	
R6027		ERJ3GEYJ562	M.RESISTOR CH 1/16W 5.6K	1	
R6027		ERJ6GEYJ153	M.RESISTOR CH 1/10W 15K	1	
R6028		ERJ3GEYJ562	M.RESISTOR CH 1/16W 5.6K	1	
R6028		ERJ6GEYJ562	M.RESISTOR CH 1/10W 5.6K	1	
R6029		ERJ3GEYJ104	M.RESISTOR CH 1/16W 100K	1	
R6029		ERJ6GEYJ103	M.RESISTOR CH 1/10W 10K	1	
R6030		ERJ6GEYJ272	M.RESISTOR CH 1/10W 2.7K	1	
R6031		ERJ6GEYJ153	M.RESISTOR CH 1/10W 15K	1	
R6032		ERJ6GEYJ221	M.RESISTOR CH 1/10W 220	1	
R6033		ERJ6GEYJ103	M.RESISTOR CH 1/10W 10K	1	
R6034		ERJ6GEYJ153	M.RESISTOR CH 1/10W 15K	1	
R6035		ERJ6GEYJ562	M.RESISTOR CH 1/10W 5.6K	1	
R6036		ERJ6GEYJ153	M.RESISTOR CH 1/10W 15K	1	
R6037		ERJ6GEYJ102	M.RESISTOR CH 1/10W 1K	1	
R6038		ERJ3GEYJ102	M.RESISTOR CH 1/16W 1K	1	
R6038		ERJ6GEYJ223	M.RESISTOR CH 1/10W 22K	1	
R6039		ERJ3GEYJ104	M.RESISTOR CH 1/16W 100K	1	
R6039		ERJ6GEYJ222	M.RESISTOR CH 1/10W 2.2K	1	
R6040		ERJ6GEYJ470	M.RESISTOR CH 1/10W 47	1	
R6041		ERJ6GEYJ105	M.RESISTOR CH 1/10W 1M	1	
R6041		VRE0034E332	M.RESISTOR CH 1/10W 3.3K	1	
R6042		ERJ6GEY0R00	M.RESISTOR CH 1/10W 0	1	
R6042		VRE0034E332	M.RESISTOR CH 1/10W 3.3K	1	
R6043		ERJ6GEYJ123	M.RESISTOR CH 1/10W 12K	1	
R6043		VRE0034E562	M.RESISTOR CH 1/10W 5.6K	1	
R6044		ERJ6GEYJ393	M.RESISTOR CH 1/10W 39K	1	
R6044		VRE0034E562	M.RESISTOR CH 1/10W 5.6K	1	
R6045		ERJ6GEYJ822	M.RESISTOR CH 1/10W 8.2K	1	
R6045		VRE0034E332	M.RESISTOR CH 1/10W 3.3K	1	
R6046		ERJ6GEYJ152	M.RESISTOR CH 1/10W 1.5K	1	
R6046		ERJ6GEYJ470	M.RESISTOR CH 1/10W 47	1	
R6047		ERJ6GEYJ823	M.RESISTOR CH 1/10W 82K	1	
R6047		VRE0034E562	M.RESISTOR CH 1/10W 5.6K	1	
R6048		ERJ6GEYJ183	M.RESISTOR CH 1/10W 18K	1	
R6048		VRE0034E332	M.RESISTOR CH 1/10W 3.3K	1	
R6049		ERJ6GEYJ823	M.RESISTOR CH 1/10W 82K	1	
R6049		VRE0034E103	M.RESISTOR CH 1/10W 10K	1	
R6050		ERJ6GEYJ105	M.RESISTOR CH 1/10W 1M	1	
R6050		ERJ6GEYJ823	M.RESISTOR CH 1/10W 82K	1	
R6051		ERJ6GEYJ105	M.RESISTOR CH 1/10W 1M	1	
R6051		ERJ6GEYJ105	M.RESISTOR CH 1/10W 1M	1	
R6052		ERJ6GEY0R00	M.RESISTOR CH 1/10W 0	1	
R6052		VRE0034E103	M.RESISTOR CH 1/10W 10K	1	
R6053		ERJ6GEYJ123	M.RESISTOR CH 1/10W 12K	1	
R6053		VRE0034E683	M.RESISTOR CH 1/10W 68K	1	

Ref.No.		Part No.	Part Name & Description	Pcs	Remarks
R6054		ERJ3GEYJ223	M.RESISTOR CH 1/16W 22K	1	
R6054		ERJ6GEYJ393	M.RESISTOR CH 1/10W 39K	1	
R6055		ERJ3GEYJ394	M.RESISTOR CH 1/16W 390K	1	
R6055		ERJ6GEYJ822	M.RESISTOR CH 1/10W 8.2K	1	
R6056		ERJ6GEYJ152	M.RESISTOR CH 1/10W 1.5K	1	
R6056		VRE0034E333	M.RESISTOR CH 1/10W 33K	1	
R6057		ERJ3GEYJ223	M.RESISTOR CH 1/16W 22K	1	
R6057		ERJ6GEYJ823	M.RESISTOR CH 1/10W 82K	1	
R6058		ERJ3GEYJ223	M.RESISTOR CH 1/16W 22K	1	
R6058		ERJ6GEYJ183	M.RESISTOR CH 1/10W 18K	1	
R6059		ERJ6GEYJ102	M.RESISTOR CH 1/10W 1K	1	
R6059		ERJ6GEYJ823	M.RESISTOR CH 1/10W 82K	1	
R6060		ERJ6GEYJ102	M.RESISTOR CH 1/10W 1K	1	
R6060		ERJ6GEYJ823	M.RESISTOR CH 1/10W 82K	1	
R6061		ERJ3GEYJ104	M.RESISTOR CH 1/16W 100K	1	
R6061		ERJ6GEYJ223	M.RESISTOR CH 1/10W 22K	1	
R6062		ERJ3GEYJ102	M.RESISTOR CH 1/16W 1K	1	
R6062		ERJ6GEYJ472	M.RESISTOR CH 1/10W 4.7K	1	
R6063		ERJ3GEYJ103	M.RESISTOR CH 1/16W 10K	1	
R6063		ERJ6GEYJ472	M.RESISTOR CH 1/10W 4.7K	1	
R6064		ERJ3GEYJ103	M.RESISTOR CH 1/16W 10K	1	
R6064		ERJ6GEYJ223	M.RESISTOR CH 1/10W 22K	1	
R6065		ERJ3GEYJ824	M.RESISTOR CH 1/16W 820K	1	
R6065		ERJ6GEYJ472	M.RESISTOR CH 1/10W 4.7K	1	
R6066		ERJ3GEYJ104	M.RESISTOR CH 1/16W 100K	1	
R6066		ERJ6GEYJ472	M.RESISTOR CH 1/10W 4.7K	1	
R6067		ERJ3GEYJ473	M.RESISTOR CH 1/16W 47K	1	
R6067		ERJ6GEYJ101	M.RESISTOR CH 1/10W 100	1	
R6068		ERJ3GEYJ103	M.RESISTOR CH 1/16W 10K	1	
R6069,70		ERJ6GEYJ222	M.RESISTOR CH 1/10W 2.2K	2	
R6071		ERJ6GEYJ103	M.RESISTOR CH 1/10W 10K	1	
R6071		ERJ6GEYJ222	M.RESISTOR CH 1/10W 2.2K	1	
R6072		ERJ6GEYJ103	M.RESISTOR CH 1/10W 10K	1	
R6072		ERJ6GEYJ222	M.RESISTOR CH 1/10W 2.2K	1	
R6073		ERJ6GEYJ102	M.RESISTOR CH 1/10W 1K	1	
R6073		ERJ6GEYJ103	M.RESISTOR CH 1/10W 10K	1	
R6074		ERJ6GEYJ102	M.RESISTOR CH 1/10W 1K	1	
R6074		ERJ6GEYJ103	M.RESISTOR CH 1/10W 10K	1	
R6075,76		ERJ3GEYJ473	M.RESISTOR CH 1/16W 47K	2	
R6077		VRE0034E103	M.RESISTOR CH 1/10W 10K	1	
R6078-82		ERJ3GEYJ104	M.RESISTOR CH 1/16W 100K	5	
R6083		ERJ6GEYJ105	M.RESISTOR CH 1/10W 1M	1	
R6084		ERJ3GEYJ103	M.RESISTOR CH 1/16W 10K	1	
R6094		VRE0034E562	M.RESISTOR CH 1/10W 5.6K	1	
R6095		VRE0034E561	M.RESISTOR CH 1/10W 560	1	
R6098-02		ERJ3GEYJ103	M.RESISTOR CH 1/16W 10K	5	
R6110		ERJ6GEYJ241	M.RESISTOR CH 1/10W 240	1	
R6111,12		ERJ3GEYJ104	M.RESISTOR CH 1/16W 100K	2	
R6113		ERJ3GEYJ473	M.RESISTOR CH 1/16W 47K	1	
R6200-02		ERJ3GEYJ103	M.RESISTOR CH 1/16W 10K	3	
R6205		ERJ6GEY0R00	M.RESISTOR CH 1/10W 0	1	
R6207		ERJ6GEY0R00	M.RESISTOR CH 1/10W 0	1	
R6209		ERJ6GEY0R00	M.RESISTOR CH 1/10W 0	1	
R6211		ERJ6GEY0R00	M.RESISTOR CH 1/10W 0	1	
R6213		ERJ6GEY0R00	M.RESISTOR CH 1/10W 0	1	
R6215		ERJ6GEY0R00	M.RESISTOR CH 1/10W 0	1	
R6217		ERJ6GEY0R00	M.RESISTOR CH 1/10W 0	1	
R6220,21		ERJ6GEY0R00	M.RESISTOR CH 1/10W 0	2	
R6301		ERJ3GEYJ331	M.RESISTOR CH 1/16W 330	1	
R6302		ERJ3GEYJ223	M.RESISTOR CH 1/16W 22K	1	
R6303		ERJ3GEYJ472	M.RESISTOR CH 1/16W 4.7K	1	
R6304		ERJ3GEYJ562	M.RESISTOR CH 1/16W 5.6K	1	
R6305		ERJ3GEYJ332	M.RESISTOR CH 1/16W 3.3K	1	
R6306		ERJ3GEYJ103	M.RESISTOR CH 1/16W 10K	1	
R6307		VRE0034E333	M.RESISTOR CH 1/10W 33K	1	
R6308		ERJ3GEYJ101	M.RESISTOR CH 1/16W 100	1	
R6309,10		ERJ3GEYJ394	M.RESISTOR CH 1/16W 390K	2	
R6311		ERJ14YJ220	M.RESISTOR 1/4W 22	1	
R6312-14		ERJ3GEYJ103	M.RESISTOR CH 1/16W 10K	3	
R6315,16		ERJ3GEYJ223	M.RESISTOR CH 1/16W 22K	2	
R6317		ERJ3GEYJ274	M.RESISTOR CH 1/16W 270K	1	
R6318-20		ERJ3GEYJ103	M.RESISTOR CH 1/16W 10K	3	
R6321,22		ERJ3GEYJ683	M.RESISTOR CH 1/16W 68K	2	
R6323		ERJ6GEYJ222	M.RESISTOR CH 1/10W 2.2K	1	
R6324		ERJ3GEYJ103	M.RESISTOR CH 1/16W 10K	1	

Ref.No.		Part No.	Part Name & Description	Pcs	Remarks
R6325		ERJ3GEYJ153	M.RESISTOR CH 1/16W 15K	1	
R6326		ERJ3GEYJ332	M.RESISTOR CH 1/16W 3.3K	1	
R6327,28		ERJ3GEYJ220	M.RESISTOR CH 1/16W 22	2	
R6329,30		ERJ3GEYJ224	M.RESISTOR CH 1/16W 220K	2	
R6331		ERJ3GEYJ103	M.RESISTOR CH 1/16W 10K	1	
R6332		ERJ14YJ100	M.RESISTOR 1/4W 10	1	
R6333		ERJ6GEYK1R0	M.RESISTOR CH1/10W 1.0	1	
R6334		ERJ6GEYJ222	M.RESISTOR CH 1/10W 2.2K	1	
R6335		ERJ3GEYJ103	M.RESISTOR CH 1/16W 10K	1	
R6336		ERJ3GEYJ682	M.RESISTOR CH 1/16W 6.8K	1	
R6337		ERJ3GEYJ153	M.RESISTOR CH 1/16W 15K	1	
R6338		ERJ3GEYJ272	M.RESISTOR CH 1/16W 2.7K	1	
R6339,40		ERJ3GEYJ220	M.RESISTOR CH 1/16W 22	2	
R6341,42		ERJ3GEYJ104	M.RESISTOR CH 1/16W 100K	2	
R6343		ERJ3GEYJ103	M.RESISTOR CH 1/16W 10K	1	
R6344		ERJ3GEYJ472	M.RESISTOR CH 1/16W 4.7K	1	
R6345		ERJ14YJ100	M.RESISTOR 1/4W 10	1	
R6346		ERJ3GEYJ102	M.RESISTOR CH 1/16W 1K	1	
R6347,48		ERJ3GEYJ222	M.RESISTOR CH 1/16W 2.2K	2	
R6349		ERJ6GEYK1R0	M.RESISTOR CH1/10W 1.0	1	
R6350		ERJ6GEYJ222	M.RESISTOR CH 1/10W 2.2K	1	
R6351		ERJ3GEYJ103	M.RESISTOR CH 1/16W 10K	1	
R6352		ERJ3GEYJ682	M.RESISTOR CH 1/16W 6.8K	1	
R6353		ERJ3GEYJ153	M.RESISTOR CH 1/16W 15K	1	
R6354		ERJ3GEYJ272	M.RESISTOR CH 1/16W 2.7K	1	
R6355,56		ERJ3GEYJ220	M.RESISTOR CH 1/16W 22	2	
R6357,58		ERJ3GEYJ104	M.RESISTOR CH 1/16W 100K	2	
R6359		ERJ3GEYJ103	M.RESISTOR CH 1/16W 10K	1	
R6360		ERJ3GEYJ472	M.RESISTOR CH 1/16W 4.7K	1	
R6361		ERJ14YJ100	M.RESISTOR 1/4W 10	1	
R6362		ERJ3GEYJ102	M.RESISTOR CH 1/16W 1K	1	
R6363,64		ERJ3GEYJ222	M.RESISTOR CH 1/16W 2.2K	2	
R6365		ERJ6GEYK1R0	M.RESISTOR CH1/10W 1.0	1	
R6366		ERJ6GEYJ222	M.RESISTOR CH 1/10W 2.2K	1	
R6367		ERJ3GEYJ103	M.RESISTOR CH 1/16W 10K	1	
R6368		ERJ3GEYJ682	M.RESISTOR CH 1/16W 6.8K	1	
R6369		ERJ3GEYJ153	M.RESISTOR CH 1/16W 15K	1	
R6370		ERJ3GEYJ272	M.RESISTOR CH 1/16W 2.7K	1	
R6371,72		ERJ3GEYJ220	M.RESISTOR CH 1/16W 22	2	
R6373,74		ERJ3GEYJ104	M.RESISTOR CH 1/16W 100K	2	
R6375		ERJ3GEYJ103	M.RESISTOR CH 1/16W 10K	1	
R6376		ERJ3GEYJ472	M.RESISTOR CH 1/16W 4.7K	1	
R6377		ERJ14YJ100	M.RESISTOR 1/4W 10	1	
R6378		ERJ3GEYJ102	M.RESISTOR CH 1/16W 1K	1	
R6379,80		ERJ3GEYJ222	M.RESISTOR CH 1/16W 2.2K	2	
R6381		ERJ6GEYK1R0	M.RESISTOR CH1/10W 1.0	1	
R6382		ERJ6GEYJ222	M.RESISTOR CH 1/10W 2.2K	1	
R6383		ERJ3GEYJ103	M.RESISTOR CH 1/16W 10K	1	
R6384		ERJ3GEYJ682	M.RESISTOR CH 1/16W 6.8K	1	
R6385		ERJ3GEYJ153	M.RESISTOR CH 1/16W 15K	1	
R6386		ERJ3GEYJ272	M.RESISTOR CH 1/16W 2.7K	1	
R6387,88		ERJ3GEYJ220	M.RESISTOR CH 1/16W 22	2	
R6389,90		ERJ3GEYJ823	M.RESISTOR CH 1/16W 82K	2	
R6391		ERJ3GEYJ103	M.RESISTOR CH 1/16W 10K	1	
R6392		ERJ3GEYJ152	M.RESISTOR CH 1/16W 1.5K	1	
R6393		ERJ14YJ100	M.RESISTOR 1/4W 10	1	
R6394		ERJ6GEYJ222	M.RESISTOR CH 1/10W 2.2K	1	
R6395		ERJ3GEYJ103	M.RESISTOR CH 1/16W 10K	1	
R6396		ERJ3GEYJ682	M.RESISTOR CH 1/16W 6.8K	1	
R6397		ERJ3GEYJ153	M.RESISTOR CH 1/16W 15K	1	
R6398		ERJ3GEYJ272	M.RESISTOR CH 1/16W 2.7K	1	
R6399,00		ERJ3GEYJ220	M.RESISTOR CH 1/16W 22	2	
R6401,02		ERJ3GEYJ823	M.RESISTOR CH 1/16W 82K	2	
R6403		ERJ3GEYJ103	M.RESISTOR CH 1/16W 10K	1	
R6404		ERJ3GEYJ152	M.RESISTOR CH 1/16W 1.5K	1	
R6405		ERJ14YJ100	M.RESISTOR 1/4W 10	1	
R6406,07		ERJ3GEYJ124	M.RESISTOR CH 1/16W 120K	2	
R6411,12		ERJ3GEYJ103	M.RESISTOR CH 1/16W 10K	2	
R6413		ERJ6GEYJ102	M.RESISTOR CH 1/10W 1K	1	
R6414,15		ERJ3GEYJ563	M.RESISTOR CH 1/16W 56K	2	
R6416		ERJ3GEYJ103	M.RESISTOR CH 1/16W 10K	1	
R6417		ERJ3GEYJ392	M.RESISTOR CH 1/16W 3.9K	1	
R6418		ERJ3GEYJ223	M.RESISTOR CH 1/16W 22K	1	
R6419		ERJ3GEYJ473	M.RESISTOR CH 1/16W 47K	1	
R6420		ERJ3GEYJ104	M.RESISTOR CH 1/16W 100K	1	

Ref.No.		Part No.	Part Name & Description	Pcs	Remarks
R6421-26		ERJ3GEYJ103	M.RESISTOR CH 1/16W 10K	6	
R6427,28		ERJ3GEYJ104	M.RESISTOR CH 1/16W 100K	2	
R6430		ERJ12YJ621	M.RESISTOR 1/2W 620	1	
R6432		VRE0034E103	M.RESISTOR CH 1/10W 10K	1	
R6433,34		VRE0034E473	M.RESISTOR CH 1/10W 47K	2	
R6435,36		VRE0034E123	M.RESISTOR CH 1/10W 12K	2	
R6437,38		VRE0034E32B	M.RESISTOR CH 1/10W 0.32	2	
R6439,40		VRE0034E332	M.RESISTOR CH 1/10W 3.3K	2	
R6441,42		ERJ6GEYK335	M.RESISTOR CH1/10W 3.3M	2	
R6443,44		VRE0034E333	M.RESISTOR CH 1/10W 33K	2	
R6445,46		ERJ6GEY0R00	M.RESISTOR CH 1/10W 0	2	
R6447-49		VRE0034E472	M.RESISTOR CH 1/10W 4.7K	3	
R6450		VRE0034E470	M.RESISTOR CH 1/10W 47	1	
R6451		VRE0034E472	M.RESISTOR CH 1/10W 4.7K	1	
R6452		ERJ6GEYJ103	M.RESISTOR CH 1/10W 10K	1	
R6453,54		VRE0034E472	M.RESISTOR CH 1/10W 4.7K	2	
R6455		ERJ3GEYJ472	M.RESISTOR CH 1/16W 4.7K	1	
R6456		ERJ3GEYJ822	M.RESISTOR CH 1/16W 8.2K	1	
R6457-59		ERJ3GEYJ103	M.RESISTOR CH 1/16W 10K	3	
R6460		ERJ3GEYJ272	M.RESISTOR CH 1/16W 2.7K	1	
R6461		ERJ3GEYJ332	M.RESISTOR CH 1/16W 3.3K	1	
R6462		ERJ3GEYJ472	M.RESISTOR CH 1/16W 4.7K	1	
R6463		ERJ3GEYJ103	M.RESISTOR CH 1/16W 10K	1	
R6464		ERJ3GEYJ472	M.RESISTOR CH 1/16W 4.7K	.1	
R6465		ERJ3GEYJ332	M.RESISTOR CH 1/16W 3.3K	1	
R6466		ERJ3GEYJ102	M.RESISTOR CH 1/16W 1K	1	
R6467		ERJ3GEYJ392	M.RESISTOR CH 1/16W 3.9K	1	
R6468		ERJ6GEYJ471	M.RESISTOR CH 1/10W 470	1	
R6469		ERJ6GEY0R00	M.RESISTOR CH 1/10W 0	1	
R6470		ERJ3GEYJ222	M.RESISTOR CH 1/16W 2.2K	1	
R6471		ERJ6GEY0R00	M.RESISTOR CH 1/10W 0	1	
R6472,73		ERJ3GEYJ103	M.RESISTOR CH 1/16W 10K	2	
R6474		ERJ6GEYJ100	M.RESISTOR CH 1/10W 10	1	
R6475,76		ERJ3GEYJ223	M.RESISTOR CH 1/16W 22K	2	
R6477		ERJ3GEYJ472	M.RESISTOR CH 1/16W 4.7K	1	
R6478		ERJ3GEYJ561	M.RESISTOR CH 1/16W 560	1	
R6479		ERJ3GEYJ103	M.RESISTOR CH 1/16W 10K	1	
R6480		ERJ3GEYJ332	M.RESISTOR CH 1/16W 3.3K	1	
R6481		ERJ3GEYJ473	M.RESISTOR CH 1/16W 47K	1	
R6485		ERJ6GEYJ470	M.RESISTOR CH 1/10W 47	1	
R6486		ERJ3GEYJ104	M.RESISTOR CH 1/16W 100K	1	
R6487		ERJ3GEYJ103	M.RESISTOR CH 1/16W 10K	1	
R6488,89		ERJ3GEYJ102	M.RESISTOR CH 1/16W 1K	2	
R6490		ERJ3GEYJ682	M.RESISTOR CH 1/16W 6.8K	1	
R6491,92		ERJ3GEYJ101	M.RESISTOR CH 1/16W 100	2	
R6493		ERJ3GEYJ561	M.RESISTOR CH 1/16W 560	1	
R6494-97		ERJ3GEYJ103	M.RESISTOR CH 1/16W 10K	4	
R6498		ERJ3GEYJ101	M.RESISTOR CH 1/16W 100	1	
R6499		ERJ3GEYJ221	M.RESISTOR CH 1/16W 220	1	
R6501		ERJ3GEYJ103	M.RESISTOR CH 1/16W 10K	1	
R6502		ERJ3GEYJ473	M.RESISTOR CH 1/16W 47K	1	
R6503		ERJ3GEYJ472	M.RESISTOR CH 1/16W 4.7K	1	
R6504		ERJ3GEYJ682	M.RESISTOR CH 1/16W 6.8K	1	
R6505		ERJ3GEYJ103	M.RESISTOR CH 1/16W 10K	1	
R6506		ERJ3GEYJ272	M.RESISTOR CH 1/16W 2.7K	1	
R6507		ERJ3GEYJ332	M.RESISTOR CH 1/16W 3.3K	1	
R6508		ERJ3GEYJ102	M.RESISTOR CH 1/16W 1K	1	
R6509		ERJ3GEYJ103	M.RESISTOR CH 1/16W 10K	1	
R6510		ERJ3GEYJ332	M.RESISTOR CH 1/16W 3.3K	1	
R6511		ERJ3GEYJ103	M.RESISTOR CH 1/16W 10K	1	
R6512		ERJ3GEYJ472	M.RESISTOR CH 1/16W 4.7K	1	
R6513		ERJ3GEYJ822	M.RESISTOR CH 1/16W 8.2K	1	
R6514,15		ERJ3GEYJ103	M.RESISTOR CH 1/16W 10K	2	
R6516		ERJ6GEYJ470	M.RESISTOR CH 1/10W 47	1	
R6517		ERJ3GEYJ104	M.RESISTOR CH 1/16W 100K	1	
R6518		ERJ3GEYJ103	M.RESISTOR CH 1/16W 10K	1	
R6519,20		ERJ3GEYJ102	M.RESISTOR CH 1/16W 1K	2	
R6521		ERJ3GEYJ392	M.RESISTOR CH 1/16W 3.9K	1	
R6522,23		ERJ3GEYJ101	M.RESISTOR CH 1/16W 100	2	
R6524		ERJ3GEYJ103	M.RESISTOR CH 1/16W 10K	1	
R6525,26		ERJ3GEYJ272	M.RESISTOR CH 1/16W 2.7K	2	
R6527,28		ERJ6GEY0R00	M.RESISTOR CH 1/10W 0	2	
R6529		ERJ3GEYJ102	M.RESISTOR CH 1/16W 1K	1	
R6530		VRE0034E79C	M.RESISTOR CH 1/10W	1	
R6531		VRE0034E60B	M.RESISTOR CH 1/10W 6	1	

Ref.No.		Part No.	Part Name & Description	Pcs	Remarks
R6532		ERJ6GEY0R00	M.RESISTOR CH 1/10W 0	1	
R6533		VRE0034E20B	M.RESISTOR CH 1/10W 2	1	
R6534		VRE0034E272	M.RESISTOR CH 1/10W 2.7K	1	
R6535		VRE0034E472	M.RESISTOR CH 1/10W 4.7K	1	
R6536		VRE0034E682	M.RESISTOR CH 1/10W 6.8K	1	
R6537		VRE0034E103	M.RESISTOR CH 1/10W 10K	1	
R6538,39		VRE0034E472	M.RESISTOR CH 1/10W 4.7K	2	
R6540		ERJ6GEYJ105	M.RESISTOR CH 1/10W 1M	1	
R6541,42		VRE0034E153	M.RESISTOR CH 1/10W 15K	2	
R6543		VRE0034E150	M.RESISTOR CH 1/10W 15	1	
R6544		ERJ6GEYJ100	M.RESISTOR CH 1/10W 10	1	
R6545,46		ERJ6GEYJ562	M.RESISTOR CH 1/10W 5.6K	2	
R6547,48		ERJ14YJ100	M.RESISTOR 1/4W 10	2	
R6549		ERJ14YJ220	M.RESISTOR 1/4W 22	1	
R6550		ERJ3GEYJ103	M.RESISTOR CH 1/16W 10K	1	
R6551,52		VRE0034E472	M.RESISTOR CH 1/10W 4.7K	2	
R6553		ERJ6GEYJ105	M.RESISTOR CH 1/10W 1M	1	
R6554,55		VRE0034E153	M.RESISTOR CH 1/10W 15K	2	
R6556		ERJ6GEYJ100	M.RESISTOR CH 1/10W 10	1	
R6557,58		ERJ6GEYJ562	M.RESISTOR CH 1/10W 5.6K	2	
R6559,60		ERJ14YJ100	M.RESISTOR 1/4W 10	2	
R6561		ERJ14YJ220	M.RESISTOR 1/4W 22	1	
R6562		ERJ3GEYJ103	M.RESISTOR CH 1/16W 10K	1	
R6563		ERJ3GEYJ473	M.RESISTOR CH 1/16W 47K	1	
R6564		ERJ6GEYJ681	M.RESISTOR CH 1/10W 680	1	
R6565		ERJ6GEY0R00	M.RESISTOR CH 1/10W 0	1	
R6566		ERJ3GEYJ473	M.RESISTOR CH 1/16W 47K	1	
R6571		ERJ6GEYJ102	M.RESISTOR CH 1/10W 1K	1	
R6572,73		ERJ3GEYJ563	M.RESISTOR CH 1/16W 56K	2	
R6574-78		ERJ3GEYJ103	M.RESISTOR CH 1/16W 10K	5	
R6579		ERJ3GEYJ392	M.RESISTOR CH 1/16W 3.9K	1	
R6580		ERJ3GEYJ223	M.RESISTOR CH 1/16W 22K	1	
R6581		ERJ3GEYJ103	M.RESISTOR CH 1/16W 10K	1	
R6582		ERJ3GEYJ223	M.RESISTOR CH 1/16W 22K	1	
R6583		ERJ3GEYJ392	M.RESISTOR CH 1/16W 3.9K	1	
R6584		ERJ3GEYJ223	M.RESISTOR CH 1/16W 22K	1	
R6585		ERJ3GEYJ103	M.RESISTOR CH 1/16W 10K	1	
R6586		ERJ3GEYJ682	M.RESISTOR CH 1/16W 6.8K	1	
R6587		ERJ3GEYJ822	M.RESISTOR CH 1/16W 8.2K	1	
R6588		ERJ3GEYJ272	M.RESISTOR CH 1/16W 2.7K	1	
R6589		ERJ3GEYJ562	M.RESISTOR CH 1/16W 5.6K	1	
R6590,91		ERJ3GEYJ103	M.RESISTOR CH 1/16W 10K	2	
R6592		ERJ6GEYJ100	M.RESISTOR CH 1/10W 10	1	
R6593		ERJ3GEYJ182	M.RESISTOR CH 1/16W 1.8K	1	
R6594		ERJ3GEYJ472	M.RESISTOR CH 1/16W 4.7K	1	
R6595		ERJ3GEYJ561	M.RESISTOR CH 1/16W 560	1	
R6596		ERJ3GEYJ101	M.RESISTOR CH 1/16W 100	1	
R6597		ERJ3GEYJ332	M.RESISTOR CH 1/16W 3.3K	1	
R6598		ERJ3GEYJ103	M.RESISTOR CH 1/16W 10K	1	
R6599		ERJ3GEYJ561	M.RESISTOR CH 1/16W 560	1	
R6600		ERJ3GEYJ473	M.RESISTOR CH 1/16W 47K	1	
R6601		ERJ3GEYJ154	M.RESISTOR CH 1/16W 150K	1	
R6602		ERJ6GEYJ102	M.RESISTOR CH 1/10W 1K	1	
R6603		ERJ3GEYJ103	M.RESISTOR CH 1/16W 10K	1	
R6604		ERJ3GEYJ153	M.RESISTOR CH 1/16W 15K	1	
R6605		ERJ3GEYJ472	M.RESISTOR CH 1/16W 4.7K	1	
R6606		ERJ3GEYJ122	M.RESISTOR CH 1/16W 1.2K	1	
R6607		ERJ3GEYJ104	M.RESISTOR CH 1/16W 100K	1	
R6608,09		ERJ6GEYJ101	M.RESISTOR CH 1/10W 100	2	
R6610		ERJ3GEYJ103	M.RESISTOR CH 1/16W 10K	1	
R6611		ERJ3GEYJ472	M.RESISTOR CH 1/16W 4.7K	1	
R6612		ERJ3GEYJ182	M.RESISTOR CH 1/16W 1.8K	1	
R6613		ERJ3GEYJ823	M.RESISTOR CH 1/16W 82K	1	
R6614,15		ERJ6GEYJ101	M.RESISTOR CH 1/10W 100	2	
R6617		ERJ3GEYJ103	M.RESISTOR CH 1/16W 10K	1	
R6618		ERJ6GEYJ681	M.RESISTOR CH 1/10W 680	1	
R6619		ERJ3GEYJ222	M.RESISTOR CH 1/16W 2.2K	1	
R6620		ERJ3GEYJ182	M.RESISTOR CH 1/16W 1.8K	1	
R6621		ERJ3GEYJ472	M.RESISTOR CH 1/16W 4.7K	1	
R6622,23		ERJ6GEYJ101	M.RESISTOR CH 1/10W 100	2	
R6624		ERJ3GEYJ103	M.RESISTOR CH 1/16W 10K	1	
R6625		ERJ3GEYJ561	M.RESISTOR CH 1/16W 560	1	
R6626		ERJ3GEYJ182	M.RESISTOR CH 1/16W 1.8K	1	
R6627		ERJ3GEYJ101	M.RESISTOR CH 1/16W 100	1	
R6628		ERJ3GEYJ103	M.RESISTOR CH 1/16W 10K	1	

Ref.No.		Part No.	Part Name & Description	Pcs	Remarks
R6629		ERJ3GEYJ561	M.RESISTOR CH 1/16W 560	1	
R6630		ERJ3GEYJ473	M.RESISTOR CH 1/16W 47K	1	
R6631		ERJ3GEYJ154	M.RESISTOR CH 1/16W 150K	1	
R6632		ERJ6GEYJ102	M.RESISTOR CH 1/10W 1K	1	
R6633		ERJ3GEYJ103	M.RESISTOR CH 1/16W 10K	1	
R6634		ERJ3GEYJ153	M.RESISTOR CH 1/16W 15K	1	
R6635		ERJ3GEYJ472	M.RESISTOR CH 1/16W 4.7K	1	
R6636		ERJ3GEYJ122	M.RESISTOR CH 1/16W 1.2K	1	
R6637		ERJ3GEYJ104	M.RESISTOR CH 1/16W 100K	1	
R6638,39		ERJ6GEYJ101	M.RESISTOR CH 1/10W 100	2	
R6640		ERJ3GEYJ103	M.RESISTOR CH 1/16W 10K	1	
R6641		ERJ3GEYJ472	M.RESISTOR CH 1/16W 4.7K	1	
R6642		ERJ3GEYJ182	M.RESISTOR CH 1/16W 1.8K	1	
R6643		ERJ3GEYJ823	M.RESISTOR CH 1/16W 82K	1	
R6644,45		ERJ6GEYJ101	M.RESISTOR CH 1/10W 100	2	
R6646		ERJ3GEYJ103	M.RESISTOR CH 1/16W 10K	1	
R6647		ERJ6GEYJ681	M.RESISTOR CH 1/10W 680	1	
R6691-93		ERJ3GEYJ103	M.RESISTOR CH 1/16W 10K	3	
RA6001,02		EXBLD8103G	COMBI.R-R 10K	2	
RY6301		VSY2039	RELAY	1	
SW6302,03		VJP1990	CONNECTOR	2	
SW6304,05		VSS0126	SWITCH	2	
SW6306		VSS0162	SWITCH	1	
SW6309		VSS0187	SWITCH	1	
SWS6301		VJS1990	CONNECTOR	1	
T6301		VLT0540	TRANSFORMER	1	
T6302		VLT0545	TRANSFORMER	1	
T6303-06		VLT0603	TRANSFORMER	4	
T6307,08		VLT0602	TRANSFORMER	2	
TP6002		VJR0646	TEST POINT	1	
TP6004-06		VJR0646	TEST POINT	3	
TP6014		VJR0646	TEST POINT	1	
TP6301-10		VJR0646	TEST POINT	10	
TP6312-19		VJR0646	TEST POINT	8	
TPG6001		VJR0646	TEST POINT	1	
TPG6301-03		VJR0646	TEST POINT	3	
TPG6306		VJR0646	TEST POINT	1	
VR6001		VRV0113B102	V.RESISTOR 1K	1	
VR6301,02		VRV0113B104	T.RESISTOR 100K	2	
VR6303		VRV0113B201	V.RESISTOR CH 1/10W 200	1	
VR6304		VRV0113B103	T.RESISTOR 10K	1	
VR6305,06		VRV0113B502	T.RESISTOR 5K	2	
VR6307		VRV0113B501	T.RESISTOR 500	1	
VR6308		VRV0113B502	T.RESISTOR 5K	1	
VR6309		VRV0113B202	T.RESISTOR 2K	1	
VR6310		VRV0113B103	T.RESISTOR 10K	1	
VR6311		VRV0113B502	T.RESISTOR 5K	1	
VR6312		VRV0113B503	T.RESISTOR 50K	1	
VR6313		VRV0113B103	T.RESISTOR 10K	1	
VR6314		VRV0113B501	T.RESISTOR 500	1	
VR6315		VRV0113B103	T.RESISTOR 10K	1	
X6001		VSX0499	CRYSTAL OSCILLATOR	1	
X6004		VSX0358	CRYSTAL OSCILLATOR	1	
X6005		VSX0498	CRYSTAL OSCILLATOR	1	

Ref.No.		Part No.	Part Name & Description	Pcs	Remarks
			MISCELLANEOUS		
		VML2143	LEVER. ARM.	1	
		VML2144	LEVER. ARM.	1	
		VXA4420	P.C.BOARD SHIELD PLATE	1	
		XTV3+6FFR	SCREW	5	

S4 SERVO/AT VEP82093A

Ref.No.		Part No.	Part Name & Description	Pcs	Remarks
S4	■	VEP82093A	P.C.BOARD W/COMPONENT		
			SERVO/AT		
			CAPACITORS		
C2001,02		ECEV1CV470	E.CAPACITOR 16V 47U	2	
C2003,04		ECUX1H120JCV	C.CAPACITOR CH 50V 12P	2	
C2005		ECUX1H103ZFV	C.CAPACITOR CH 50V 0.01U	1	
C2006-08		ECUX1H103KBV	C.CAPACITOR CH 50V 0.01U	3	
C2009-13		ECUX1H103ZFV	C.CAPACITOR CH 50V 0.01U	5	
C2014,15		ECEV1CV470	E.CAPACITOR 16V 47U	2	
C2101-04		ECEV1EV330	E.CAPACITOR 25V 33U	4	
C2105,06		ECUX1H103KBV	C.CAPACITOR CH 50V 0.01U	2	
C2107-10		ECUX1H102KBV	C.CAPACITOR 50V 1000P	4	
C2111		ECUX1H103KBV	C.CAPACITOR CH 50V 0.01U	1	
C2112-14		ECUX1H103ZFV	C.CAPACITOR CH 50V 0.01U	3	
C2118-21		ECEV1EV330	E.CAPACITOR 25V 33U	4	
C2122,23		ECUX1H103KBV	C.CAPACITOR CH 50V 0.01U	2	
C2124-27		ECUX1H102KBV	C.CAPACITOR 50V 1000P	4	
C2128-30		ECUX1H103ZFV	C.CAPACITOR CH 50V 0.01U	3	
C2131-34		ECEV1EV330	E.CAPACITOR 25V 33U	4	
C2135,36		ECUX1H103KBV	C.CAPACITOR CH 50V 0.01U	2	
C2137-40		ECUX1H102KBV	C.CAPACITOR 50V 1000P	4	
C2141-43		ECUX1H103ZFV	C.CAPACITOR CH 50V 0.01U	3	
C2301		ECEV1CN100	E.CAPACITOR 16V 10U	1	
C2302		ECEV1CV220	E.CAPACITOR 16V 22U	1	
C2303		ECEV1CV470	E.CAPACITOR 16V 47U	1	
C2304-09		ECUX1H103ZFV	C.CAPACITOR CH 50V 0.01U	6	
C2310-13		ECUX1H222KBV	C.CAPACITOR CH 50V 2200P	4	
C2314,15		ECEV1CN100	E.CAPACITOR 16V 10U	2	
C2316-21		ECUX1H103ZFV	C.CAPACITOR CH 50V 0.01U	6	
C2322,23		ECUX1H103KBV	C.CAPACITOR CH 50V 0.01U	2	
C2324		ECEV1CV220	E.CAPACITOR 16V 22U	1	
C2325		ECEV1CV470	E.CAPACITOR 16V 47U	1	
C2401		ECEV1CV100	E.CAPACITOR 16V 10U	1	
C2402,03		ECEV1CV470	E.CAPACITOR 16V 47U	2	
C2404,05		ECUX1H103ZFV	C.CAPACITOR CH 50V 0.01U	2	
C2406-11		ECUX1H103KBV	C.CAPACITOR CH 50V 0.01U	6	
C2414,15		ECUX1H103ZFV	C.CAPACITOR CH 50V 0.01U	2	
C2416,17		ECUX1H103KBV	C.CAPACITOR CH 50V 0.01U	2	
C2418-21		ECUX1H103ZFV	C.CAPACITOR CH 50V 0.01U	4	
C2422		ECUX1H103KBV	C.CAPACITOR CH 50V 0.01U	1	
C2423-26		ECUX1H103ZFV	C.CAPACITOR CH 50V 0.01U	4	
C2427-34		ECUX1H103KBV	C.CAPACITOR CH 50V 0.01U	8	
C2435-40		ECUX1H103ZFV	C.CAPACITOR CH 50V 0.01U	6	
C2441,42		ECUX1C333KBV	C.CAPACITOR CH 16V 330P	2	
C2445		ECUX1H472KBV	C.CAPACITOR 50V 4700P	1	
C2501		ECUX1H103ZFV	C.CAPACITOR CH 50V 0.01U	1	
C2701-03		ECEV1HV010	E.CAPACITOR 50V 1U	3	
C2704		ECEV1EV330	E.CAPACITOR 25V 33U	1	
C2705,06		ECEV1CV470	E.CAPACITOR 16V 47U	2	
C2707		ECEV1EV330	E.CAPACITOR 25V 33U	1	
C2708		ECEV1CV470	E.CAPACITOR 16V 47U	1	
C2710-20		ECUX1H103ZFV	C.CAPACITOR CH 50V 0.01U	11	
C2722-81		ECUX1H103ZFV	C.CAPACITOR CH 50V 0.01U	60	
D2001		LN1251CAL	DIODE	1	
D2003,04		LN1251CAL	DIODE	2	
D2006,07		LN1251CAL	DIODE	2	
D2101-12		MA157	DIODE	12	
D2301-04		MA8039-L	DIODE	4	
D2305		MA157	DIODE	1	
D2306-09		MA8039-L	DIODE	4	
D2310-12		MA151K	DIODE	3	
D2313		MA157	DIODE	1	

Ref.No.		Part No.	Part Name & Description	Pcs	Remarks
FL2701-05		VLF0576	FILTER	5	
IC2001		TL7705CPSB	IC	1	
IC2002		MC68332CFC	IC	1	
IC2003		VSI1327	IC	1	
IC2005		TC7WU04F	IC	1	
IC2007		MC74HC4050F	IC	1	
IC2009		MC74HC4002F	IC	1	
IC2011		MC74HC157AF	IC	1	
IC2012		74AC74SJ	IC	1	
IC2014		74AC08SJ	IC	1	
IC2018,19		MN4464S08L	IC	2	
IC2020		MB8421-90LPF	IC	1	
IC2021		SN74S1051NS	IC	1	
IC2024		SN74S1051NS	IC	1	
IC2027		MC74HC86F	IC	1	
IC2031		MC74HC74AF	IC	1	
IC2033		MC74HC273AF	IC	1	
IC2034		MC74HC175F	IC	1	
IC2035		MC74HC164F	IC	1	
IC2036		MC74HC08AF	IC	1	
IC2040		EXBLD8103G	COMBI.R-R 10K	1	
IC2041		SLA909SF1G	IC	1	
IC2042		MC74HCT244AF	IC	1	
IC2045		MC74HC151F	IC	1	
IC2046		TE7750	IC	1	
IC2050		MC74HC244AF	IC	1	
IC2051		MC74HC175F	IC	1	
IC2052		MC74HC153F	IC	1	
IC2101,02		UPC4741G2	IC	2	
IC2109,10		MC74HC4050F	IC	2	
IC2113		UPC4558G2	IC	1	
IC2115		UPC4558G2	IC	1	
IC2117		NJM2901M	IC	1	
IC2135,36		UPC4741G2	IC	2	
IC2147		UPC4558G2	IC	1	
IC2149		UPD4066BG	IC	1	
IC2153		NJM2901M	IC	1	
IC2157,58		UPC4741G2	IC	2	
IC2169		UPC4558G2	IC	1	
IC2171		UPD4066BG	IC	1	
IC2175		NJM2901M	IC	1	
IC2301		MC74HC4053F	IC	1	
IC2304		MC74HC4052F	IC	1	
IC2306,07		NJM4580ED	IC	2	
IC2310		UPC4558G2	IC	1	
IC2311		ADG211AKR	IC	1	
IC2312		AD633JR	IC	1	
IC2313		MC74HC4053F	IC	1	
IC2317,18		UPC4558G2	IC	2	
IC2401		UPC4074G2	IC	1	
IC2405		UPC4741G2	IC	1	
IC2409		UPC4074G2	IC	1	
IC2413		UPC4074G2	IC	1	
IC2417		UPC4741G2	IC	1	
IC2421		AD7868AR	IC	1	
IC2422-25		MC74HC4051F	IC	4	
IC2426		NJM4580ED	IC	1	
IC2428		UPC4082G2	IC	1	
IC2432,33		UPC4558G2	IC	2	
IC2501		NJM2903M	IC	1	
IC2701		NJM78L12UA	IC	1	
IC2702		NJM79L12UA	IC	1	
IC2703-05		NJM78L12UA	IC	3	
IC2706		NJM79L12UA	IC	1	
IC2707,08		NJM78L05UA	IC	2	
IC2709		NJM79L05UA	IC	1	
L2001,02		VLQ0576	COIL	2	

Ref.No.	Part No.	Part Name & Description	Pcs	Remarks
P207,08	VJP3454B096	CONNECTOR (MALE)	2	
Q2101,02	UN2113	TRANSISTOR-RESISTOR	2	
Q2103-06	UN2213	TRANSISTOR-RESISTOR	4	
Q2107,08	UN2113	TRANSISTOR-RESISTOR	2	
Q2109-13	UN2213	TRANSISTOR-RESISTOR	5	
Q2114,15	UN2113	TRANSISTOR-RESISTOR	2	
Q2116-19	UN2213	TRANSISTOR-RESISTOR	4	
Q2301-03	2SB709-R	TRANSISTOR CHIP	3	(R)
Q2304,05	2SD601-R	TRANSISTOR CHIP	2	(R)
Q2306	UN2113	TRANSISTOR-RESISTOR	1	
Q2307	UN2215	TRANSISTOR-RESISTOR	1	
Q2308,09	UN2213	TRANSISTOR-RESISTOR	2	
Q2310	2SD601-R	TRANSISTOR CHIP	1	(R)
Q2311	UN2115	COMBINATION PARTS	1	
		RESISTORS		
R2001	ERJ3GEYJ562	M.RESISTOR CH 1/16W 5.6K	1	
R2003	ERJ3GEYJ101	M.RESISTOR CH 1/16W 100	1	
R2004	ERJ3GEYJ473	M.RESISTOR CH 1/16W 47K	1	
R2005	ERJ3GEY0R00	M.RESISTOR CH 1/16W 0	1	
R2006	ERJ3GEYJ105	M.RESISTOR CH 1/16W 1M	1	
R2007-10	ERJ3GEYJ562	M.RESISTOR CH 1/16W 5.6K	4	
R2011	ERJ3GEY0R00	M.RESISTOR CH 1/16W 0	1	
R2012-17	ERJ3GEYJ562	M.RESISTOR CH 1/16W 5.6K	6	
R2018	ERJ3GEYJ473	M.RESISTOR CH 1/16W 47K	1	
R2019	ERJ3GEYJ103	M.RESISTOR CH 1/16W 10K	1	
R2020-22	ERJ3GEYJ473	M.RESISTOR CH 1/16W 47K	3	
R2024	ERJ3GEYJ103	M.RESISTOR CH 1/16W 10K	1	
R2025-27	ERJ3GEYJ101	M.RESISTOR CH 1/16W 100	3	
R2028	ERJ3GEYJ152	M.RESISTOR CH 1/16W 1.5K	1	
R2029,30	ERJ3GEYJ473	M.RESISTOR CH 1/16W 47K	2	
R2032	ERJ3GEY0R00	M.RESISTOR CH 1/16W 0	1	
R2033-36	ERJ3GEYJ101	M.RESISTOR CH 1/16W 100	4	
R2037	ERJ3GEY0R00	M.RESISTOR CH 1/16W 0	1	
R2039,40	ERJ3GEYJ471	M.RESISTOR CH 1/16W 470	2	
R2041,42	ERJ3GEYJ104	M.RESISTOR CH 1/16W 100K	2	
R2043,44	ERJ3GEYJ473	M.RESISTOR CH 1/16W 47K	2	
R2046	ERJ3GEYJ101	M.RESISTOR CH 1/16W 100	1	
R2056,57	ERJ3GEYJ821	M.RESISTOR CH 1/16W 820	2	
R2060-62	ERJ3GEYJ821	M.RESISTOR CH 1/16W 820	3	
R2101,02	ERJ3GEYJ103	M.RESISTOR CH 1/16W 10K	2	
R2103,04	ERJ3GEYJ333	M.RESISTOR CH 1/16W 33K	2	
R2105,06	ERJ3GEYJ562	M.RESISTOR CH 1/16W 5.6K	2	
R2107,08	ERJ3GEYJ224	M.RESISTOR CH 1/16W 220K	2	
R2109,10	ERJ3GEYJ562	M.RESISTOR CH 1/16W 5.6K	2	
R2111,12	ERJ3GEYJ332	M.RESISTOR CH 1/16W 3.3K	2	
R2113	ERJ3GEYJ224	M.RESISTOR CH 1/16W 220K	1	
R2114	VRE0034E333	M.RESISTOR CH 1/10W 33K	1	
R2115	ERJ3GEYJ224	M.RESISTOR CH 1/16W 220K	1	
R2116-18	VRE0034E333	M.RESISTOR CH 1/10W 33K	3	
R2119,20	ERJ3GEYJ332	M.RESISTOR CH 1/16W 3.3K	2	
R2121-28	VRE0034E473	M.RESISTOR CH 1/10W 47K	8	
R2129-32	VRE0034E224	M.RESISTOR CH 1/10W 220K	4	
R2133-36	ERJ3GEYJ103	M.RESISTOR CH 1/16W 10K	4	
R2137-40	ERJ3GEYJ472	M.RESISTOR CH 1/16W 4.7K	4	
R2141,42	VRE0034E562	M.RESISTOR CH 1/10W 5.6K	2	
R2143-46	ERJ3GEYJ104	M.RESISTOR CH 1/16W 100K	4	
R2191,92	ERJ3GEYJ103	M.RESISTOR CH 1/16W 10K	2	
R2193,94	ERJ3GEYJ333	M.RESISTOR CH 1/16W 33K	2	
R2195-98	ERJ3GEYJ562	M.RESISTOR CH 1/16W 5.6K	4	
R2199	ERJ3GEYJ473	M.RESISTOR CH 1/16W 47K	1	
R2200,01	ERJ3GEYJ683	M.RESISTOR CH 1/16W 68K	2	
R2202,03	ERJ3GEYJ154	M.RESISTOR CH 1/16W 150K	2	
R2204,05	ERJ3GEYJ683	M.RESISTOR CH 1/16W 68K	2	
R2206,07	ERJ3GEYJ332	M.RESISTOR CH 1/16W 3.3K	2	
R2208,09	ERJ3GEYJ154	M.RESISTOR CH 1/16W 150K	2	
R2210-13	VRE0034E333	M.RESISTOR CH 1/10W 33K	4	
R2214,15	ERJ3GEYJ332	M.RESISTOR CH 1/16W 3.3K	2	
R2216-23	VRE0034E473	M.RESISTOR CH 1/10W 47K	8	

Ref.No.	Part No.	Part Name & Description	Pcs	Remarks
R2224-27	VRE0034E224	M.RESISTOR CH 1/10W 220K	4	
R2228-31	ERJ3GEYJ103	M.RESISTOR CH 1/16W 10K	4	
R2232-35	ERJ3GEYJ472	M.RESISTOR CH 1/16W 4.7K	4	
R2236,37	ERJ3GEYJ103	M.RESISTOR CH 1/16W 10K	2	
R2238,39	ERJ3GEYJ333	M.RESISTOR CH 1/16W 33K	2	
R2240-43	ERJ3GEYJ562	M.RESISTOR CH 1/16W 5.6K	4	
R2244,45	ERJ3GEYJ683	M.RESISTOR CH 1/16W 68K	2	
R2246,47	ERJ3GEYJ154	M.RESISTOR CH 1/16W 150K	2	
R2248,49	ERJ3GEYJ683	M.RESISTOR CH 1/16W 68K	2	
R2250,51	ERJ3GEYJ332	M.RESISTOR CH 1/16W 3.3K	2	
R2252,53	ERJ3GEYJ154	M.RESISTOR CH 1/16W 150K	2	
R2254-57	VRE0034E333	M.RESISTOR CH 1/10W 33K	4	
R2258,59	ERJ3GEYJ332	M.RESISTOR CH 1/16W 3.3K	2	
R2260-67	VRE0034E473	M.RESISTOR CH 1/10W 47K	8	
RZ268-71	VRE0034E224	M.RESISTOR CH 1/10W 220K	4	
R2272-75	ERJ3GEYJ103	M.RESISTOR CH 1/16W 10K	4	
R2276-79	ERJ3GEYJ472	M.RESISTOR CH 1/16W 4.7K	4	
R2301	ERJ3GEYJ101	M.RESISTOR CH 1/16W 100	1	
R2302	ERJ3GEYJ563	M.RESISTOR CH 1/16W 56K	1	
R2303	ERJ3GEYJ104	M.RESISTOR CH 1/16W 100K	1	
R2304,05	ERJ3GEYJ103	M.RESISTOR CH 1/16W 10K	2	
R2307	VRE0034E152	M.RESISTOR CH 1/10W 1.5K	1	
R2308	ERJ3GEYJ183	M.RESISTOR CH 1/16W 18K	1	
R2309	ERJ3GEYJ823	M.RESISTOR CH 1/16W 82K	1	
R2310	ERJ3GEYJ183	M.RESISTOR CH 1/16W 18K	1	
R2311	ERJ3GEYJ823	M.RESISTOR CH 1/16W 82K	1	
R2313	VRE0034E221	M.RESISTOR CH 1/10W 220	1	
R2314	ERJ3GEYJ562	M.RESISTOR CH 1/16W 5.6K	1	
R2315	ERJ3GEYJ103	M.RESISTOR CH 1/16W 10K	1	
R2316,17	ERJ3GEYJ562	M.RESISTOR CH 1/16W 5.6K	2	
R2318	ERJ3GEYJ273	M.RESISTOR CH 1/16W 27K	1	
R2319,20	VRE0034E471	M.RESISTOR CH 1/10W 470	2	
R2321,22	ERJ3GEYJ102	M.RESISTOR CH 1/16W 1K	2	
R2323,24	ERJ3GEYJ122	M.RESISTOR CH 1/16W 1.2K	2	
R2325,26	ERJ3GEYJ102	M.RESISTOR CH 1/16W 1K	2	
R2327,28	ERJ3GEYJ124	M.RESISTOR CH 1/16W 120K	2	
R2329,30	ERJ3GEYJ474	M.RESISTOR CH 1/16W 470K	2	
R2331,32	ERJ3GEYJ153	M.RESISTOR CH 1/16W 15K	2	
R2333,34	ERJ3GEYJ392	M.RESISTOR CH 1/16W 3.9K	2	
R2335,36	ERJ3GEYJ122	M.RESISTOR CH 1/16W 1.2K	2	
R2337	ERJ3GEYJ153	M.RESISTOR CH 1/16W 15K	1	
R2338	ERJ3GEYJ223	M.RESISTOR CH 1/16W 22K	1	
R2339	ERJ3GEYJ153	M.RESISTOR CH 1/16W 15K	1	
R2340,41	ERJ3GEYJ682	M.RESISTOR CH 1/16W 6.8K	2	
R2342-44	ERJ3GEYJ103	M.RESISTOR CH 1/16W 10K	3	
R2345	VRE0034E683	M.RESISTOR CH 1/10W 68K	1	
R2346	VRE0034E104	M.RESISTOR CH 1/10W 100K	1	
R2347,48	VRE0034E332	M.RESISTOR CH 1/10W 3.3K	2	
R2349	ERJ3GEYJ223	M.RESISTOR CH 1/16W 22K	1	
R2350	VRE0034E122	M.RESISTOR CH 1/10W 1.2K	1	
R2351	VRE0034E563	M.RESISTOR CH 1/10W 56K	1	
R2352	ERJ3GEYJ102	M.RESISTOR CH 1/16W 1K	1	
R2353	ERJ3GEYJ683	M.RESISTOR CH 1/16W 68K	1	
R2354	ERJ3GEYJ103	M.RESISTOR CH 1/16W 10K	1	
R2355	VRE0034E273	M.RESISTOR CH 1/10W 27K	1	
R2356	VRE0034E103	M.RESISTOR CH 1/10W 10K	1	
R2357	ERJ3GEYJ563	M.RESISTOR CH 1/16W 56K	1	
R2358	ERJ3GEYJ104	M.RESISTOR CH 1/16W 100K	1	
R2401	VRE0034E563	M.RESISTOR CH 1/10W 56K	1	
R2402	VRE0034E273	M.RESISTOR CH 1/10W 27K	1	
R2403	VRE0034E222	M.RESISTOR CH 1/10W 2.2K	1	
R2404	VRE0034E332	M.RESISTOR CH 1/10W 3.3K	1	
R2405	VRE0034E112	M.RESISTOR CH 1/10W 1.1K	1	
R2406-10	ERJ3GEYJ561	M.RESISTOR CH 1/16W 560	5	
R2411	ERJ3GEYJ221	M.RESISTOR CH 1/16W 220	1	
R2412	VRE0034E273	M.RESISTOR CH 1/10W 27K	1	
R2413	VRE0034E563	M.RESISTOR CH 1/10W 56K	1	
R2414	VRE0034E273	M.RESISTOR CH 1/10W 27K	1	
R2415	VRE0034E563	M.RESISTOR CH 1/10W 56K	1	
R2416	VRE0034E273	M.RESISTOR CH 1/10W 27K	1	
R2417	VRE0034E563	M.RESISTOR CH 1/10W 56K	1	
R2418	VRE0034E273	M.RESISTOR CH 1/10W 27K	1	
R2419	VRE0034E563	M.RESISTOR CH 1/10W 56K	1	
R2420	VRE0034E273	M.RESISTOR CH 1/10W 27K	1	
R2421	VRE0034E563	M.RESISTOR CH 1/10W 56K	1	

Ref.No.		Part No.	Part Name & Description	Pcs	Remarks
R2422,23		ERJ3GEYJ472	M.RESISTOR CH 1/16W 4.7K	2	
R2424,25		ERJ3GEYJ473	M.RESISTOR CH 1/16W 47K	2	
R2429,30		ERJ3GEYJ473	M.RESISTOR CH 1/16W 47K	2	
R2436-39		ERJ3GEYJ153	M.RESISTOR CH 1/16W 15K	4	
R2440		VRE0034E333	M.RESISTOR CH 1/10W 33K	1	
R2441		ERJ3GEYJ473	M.RESISTOR CH 1/16W 47K	1	
R2442-44		ERJ3GEYJ223	M.RESISTOR CH 1/16W 22K	3	
R2447		ERJ3GEYJ473	M.RESISTOR CH 1/16W 47K	1	
R2448		VRE0034E223	M.RESISTOR CH 1/10W 22K	1	
R2501,02		ERJ3GEYJ123	M.RESISTOR CH 1/16W 12K	2	
R2503,04		ERJ3GEYJ824	M.RESISTOR CH 1/16W 820K	2	
R2505		ERJ3GEYJ473	M.RESISTOR CH 1/16W 47K	1	
R2506		ERJ3GEYJ223	M.RESISTOR CH 1/16W 22K	1	
R2507		ERJ3GEYJ473	M.RESISTOR CH 1/16W 47K	1	
R2508		ERJ3GEYJ223	M.RESISTOR CH 1/16W 22K	1	
R2509,10		ERJ3GEYJ272	M.RESISTOR CH 1/16W 2.7K	2	
TP2001		VJR0646	TEST POINT	1	
TP2003		VJR0646	TEST POINT	1	
TP2005		VJR0646	TEST POINT	1	
TP2101-06		VJR0646	TEST POINT	6	
TP2303-05		VJR0646	TEST POINT	3	
TP2401		VJR0646	TEST POINT	1	
TP2404		VJR0646	TEST POINT	1	
TP2501,02		VJR0646	TEST POINT	2	
TPG2001-03		VJR0646	TEST POINT	3	
X2001		VSX0519	CRYSTAL OSCILLATOR	1	
			MISCELLANEOUS		
		VML2143	LEVER. ARM.	1	
		VML2144	LEVER. ARM.	1	
		VXA4420	P.C.BOARD SHIELD PLATE	1	
		XTV3+6FFR	SCREW	5	

S5 SYSCON VEP86125A

Ref.No.		Part No.	Part Name & Description	Pcs	Remarks
S5	■	VEP86125A	P.C.BOARD W/COMPONENT		
			SYSCON		
			CAPACITORS		
C6001-04		ECUX1C104ZFV	C.CAPACITOR CH 16V 0.1U	4	
C6005		ECUX1H103ZFV	C.CAPACITOR CH 50V 0.01U	1	
C6006		ECUX1C104ZFV	C.CAPACITOR CH 16V 0.1U	1	
C6007,08		ECUX1H220JCV	C.CAPACITOR CH 50V 22P	2	
C6009		ECUX1C104ZFV	C.CAPACITOR CH 16V 0.1U	1	
C6010		ECA1HXS2R2	E.CAPACITOR 50V 2.2U	1	
C6011		ECUX1H103ZFV	C.CAPACITOR CH 50V 0.01U	1	
C6012		ECUX1C104ZFV	C.CAPACITOR CH 16V 0.1U	1	
C6013		ECA1AXS680	E.CAPACITOR 10V 68U	1	
C6014,15		ECUX1C104ZFV	C.CAPACITOR CH 16V 0.1U	2	
C6020		ECUX1C104ZFV	C.CAPACITOR CH 16V 0.1U	1	
C6021		ECUX1H470JCV	C.CAPACITOR 50V 47P	1	
C6022		VCV0041	TRIMMER	1	
C6023,24		ECUX1C104ZFV	C.CAPACITOR CH 16V 0.1U	2	
C6025		ECUX1H103ZFV	C.CAPACITOR CH 50V 0.01U	1	
C6026,27		ECUX1H101JCV	C.CAPACITOR CH 50V 100P	2	
C6028,29		ECUX1H103ZFV	C.CAPACITOR CH 50V 0.01U	2	
C6030		ECUX1C104ZFV	C.CAPACITOR CH 16V 0.1U	1	
C6031-33		ECUX1H103ZFV	C.CAPACITOR CH 50V 0.01U	3	
C6034,35		ECUX1C104ZFV	C.CAPACITOR CH 16V 0.1U	2	
C6040-65		ECUX1C104ZFV	C.CAPACITOR CH 16V 0.1U	26	
C6070-79		ECUX1H103ZFV	C.CAPACITOR CH 50V 0.01U	10	
C6080		ECUX1C104ZFV	C.CAPACITOR CH 16V 0.1U	1	
C6081,82		ECUX1H103ZFV	C.CAPACITOR CH 50V 0.01U	2	
C6083		ECUX1C104ZFV	C.CAPACITOR CH 16V 0.1U	1	
C6084-86		ECUX1H103ZFV	C.CAPACITOR CH 50V 0.01U	3	
C6100-11		ECUX1C104ZFV	C.CAPACITOR CH 16V 0.1U	12	
C6120-22		ECUX1C104ZFV	C.CAPACITOR CH 16V 0.1U	3	
C6123		ECUX1H103ZFV	C.CAPACITOR CH 50V 0.01U	1	
C6124,25		ECUX1C104ZFV	C.CAPACITOR CH 16V 0.1U	2	
C6140-42		ECUX1H103ZFV	C.CAPACITOR CH 50V 0.01U	3	
C6143		ECUX1H221JCV	C.CAPACITOR CH 50V 220P	1	
C6144,45		ECUX1H103ZFV	C.CAPACITOR CH 50V 0.01U	2	
C6146		ECUX1H221JCV	C.CAPACITOR CH 50V 220P	1	
C6147-49		ECUX1H103ZFV	C.CAPACITOR CH 50V 0.01U	3	
C6150-52		ECUX1C104ZFV	C.CAPACITOR CH 16V 0.1U	3	
C6153		ECUX1H103ZFV	C.CAPACITOR CH 50V 0.01U	1	
C6170-76		ECUX1C104ZFV	C.CAPACITOR CH 16V 0.1U	7	
C6177,78		ECUX1H220JCV	C.CAPACITOR CH 50V 22P	2	
C6179-85		ECUX1C104ZFV	C.CAPACITOR CH 16V 0.1U	7	
D6001,02		MA151K	DIODE	2	
IC6001		HD64180ZP8	IC	1	
IC6002		VSI1324	IC	1	
IC6003,04		MN4464S-08LL	IC	2	
IC6005		DS1225Y-200	IC	1	
IC6006		HD6435328F10	IC	1	
IC6007		VSI1325	IC	1	
IC6008,09		MN4464S-08LL	IC	2	
IC6010,11		MB89363BPF	IC	2	
IC6012,13		MB8421-90LPF	IC	2	
IC6014		TL7705CPSB	IC	1	
IC6015		MC74HC4040F	IC	1	
IC6016		MC74HC138AF	IC	1	
IC6017		MC74HC139AF	IC	1	
IC6018		UPD6456T611Y	IC	1	
IC6019		MC74HC138AF	IC	1	
IC6020		MC74HC161F	IC	1	
IC6021-23		MC74HC138AF	IC	3	
IC6024-26		MC74HC574AF	IC	3	

Ref.No.		Part No.	Part Name & Description	Pcs	Remarks
IC6027-29		MC74HC165F	IC	3	
IC6030-35		MC74HC574AF	IC	6	
IC6036-38		MC74HC165F	IC	3	
IC6039,40		MC74HC163AF	IC	2	
IC6041		UPD71054GB	IC	1	
IC6042,43		MC34051M	IC	2	
IC6044		MC74HC161F	IC	1	
IC6045		MC74HC164F	IC	1	
IC6046		MC74HC541F	IC	1	
IC6047		MC74HC244AF	IC	1	
IC6048		MC74HC153F	IC	1	
IC6049		MC74HC541F	IC	1	
IC6050,51		MC74HC4040F	IC	2	
IC6052		MC74HC165F	IC	1	
IC6053		MC14094BF	IC	1	
IC6054		MC14024BF	IC	1	
IC6055-58		MC14094BF	IC	4	
IC6059-62		MC14021BF	IC	4	
IC6063		MC74HC541F	IC	1	
IC6064		MC74HC74AF	IC	1	
IC6065		MC74HC245AF	IC	1	
IC6066,67		MC74HC541F	IC	2	
IC6068,69		SN74S1051NS	IC	2	
IC6070		TMP284C43AF8	IC	1	
IC6072		MC34051M	IC	1	
IC6074		MC34051M	IC	1	
IC6075		MC74HC138AF	IC	1	
IC6076		MC74HC4040F	IC	1	
IC6077		MC74HC4053F	IC	1	
IC6078		MC34051M	IC	1	
IC6079		MC74HC32AF	IC	1	
IC6080		MC74HC4050F	IC	1	
IC6081		MC74HC04AF	IC	1	
IC6082		MC74HC08AF	IC	1	
IC6083		MC74HC00AF	IC	1	
IC6084		MC74HC74AF	IC	1	
IC6085,86		MC74HC04AF	IC	2	
IC6087		MC74HC32AF	IC	1	
IC6088		MC74HC74AF	IC	1	
IC6089		MC74HC08AF	IC	1	
IC6090		MC74HC74AF	IC	1	
IC6091		MC74HCU04F	IC	1	
IC6092		MC74HC02AF	IC	1	
IC6093,94		MC74HC08AF	IC	2	
IC6095		MC1488M	IC	1	
IC6096		MC1489M	IC	1	
IC6097		MC74HC74AF	IC	1	
IC6098,99		MC74HC126AF	IC	2	
IC6100		MC74HC138AF	IC	1	
IC6102		MC74HC138AF	IC	1	
IC6103		MC74HC32AF	IC	1	
IC6104		SN74LS245NS	IC	1	
IC6105		SN74S1051NS	IC	1	
IC6106		SN74LS541NS	IC	1	
IC6107,08		SN74S1051NS	IC	2	
IC6109		SN74LS541NS	IC	1	
IC6110		MC74HC541F	IC	1	
IC6111-16		MC74HC4050F	IC	6	
ICS6001		VJS1830	CONNECTOR	1	
ICS6002		VJS2336A032	CONNECTOR (FEMALE)	1	
ICS6007		VJS2336A032	CONNECTOR (FEMALE)	1	
L6001		VLF0576	FILTER	1	
L6002		VLQ0163J270	COIL 27UH	1	
L6003-06		VLQ0576	COIL	4	
P009,10		VJP3454B096	CONNECTOR (MALE)	2	
Q6001		UN2213	TRANSISTOR-RESISTOR	1	

S5

Ref.No.		Part No.	Part Name & Description	Pcs	Remarks
Q6002,03		UN2112	TRANSISTOR-RESISTOR	2	
			RESISTORS		
R6001-10		ERJ3GEYJ104	M.RESISTOR CH 1/16W 100K	10	
R6011		ERJ3GEYJ103	M.RESISTOR CH 1/16W 10K	1	
R6012,13		ERJ3GEYJ562	M.RESISTOR CH 1/16W 5.6K	2	
R6014		ERJ3GEYJ222	M.RESISTOR CH 1/16W 2.2K	1	
R6015		ERJ3GEYJ474	M.RESISTOR CH 1/16W 470K	1	
R6020-23		ERJ3GEYJ473	M.RESISTOR CH 1/16W 47K	4	
R6024		ERJ3GEYJ562	M.RESISTOR CH 1/16W 5.6K	1	
R6025		ERJ3GEYJ103	M.RESISTOR CH 1/16W 10K	1	
R6026		ERJ3GEYJ223	M.RESISTOR CH 1/16W 22K	1	
R6027		ERJ3GEYJ103	M.RESISTOR CH 1/16W 10K	1	
R6028		ERJ3GEYJ474	M.RESISTOR CH 1/16W 470K	1	
R6029		ERJ3GEYJ103	M.RESISTOR CH 1/16W 10K	1	
R6030		ERJ3GEYJ331	M.RESISTOR CH 1/16W 330	1	
R6031		ERJ3GEYJ103	M.RESISTOR CH 1/16W 10K	1	
R6032		ERJ3GEYJ562	M.RESISTOR CH 1/16W 5.6K	1	
R6033		ERJ3GEYJ472	M.RESISTOR CH 1/16W 4.7K	1	
R6034		ERJ3GEYJ103	M.RESISTOR CH 1/16W 10K	1	
R6035		ERJ3GEYJ331	M.RESISTOR CH 1/16W 330	1	
R6036		ERJ3GEYJ103	M.RESISTOR CH 1/16W 10K	1	
R6040		ERJ3GEYJ103	M.RESISTOR CH 1/16W 10K	1	
R6070		ERJ3GEYJ681	M.RESISTOR CH 1/16W 680	1	
R6071-88		ERJ3GEYJ103	M.RESISTOR CH 1/16W 10K	18	
R6089		ERJ3GEYJ223	M.RESISTOR CH 1/16W 22K	1	
R6090		ERJ3GEYJ122	M.RESISTOR CH 1/16W 1.2K	1	
R6091		ERJ3GEYJ391	M.RESISTOR CH 1/16W 390	1	
R6092		ERJ3GEYJ681	M.RESISTOR CH 1/16W 680	1	
R6093		ERJ3GEYJ122	M.RESISTOR CH 1/16W 1.2K	1	
R6094		ERJ3GEYJ391	M.RESISTOR CH 1/16W 390	1	
R6095		ERJ3GEYJ223	M.RESISTOR CH 1/16W 22K	1	
R6096,97		ERJ3GEYJ681	M.RESISTOR CH 1/16W 680	2	
R6100		ERJ3GEYJ223	M.RESISTOR CH 1/16W 22K	1	
R6101,02		ERJ3GEYJ103	M.RESISTOR CH 1/16W 10K	2	
R6103-09		ERJ3GEYJ104	M.RESISTOR CH 1/16W 100K	7	
R6110		ERJ3GEYJ103	M.RESISTOR CH 1/16W 10K	1	
R6111		ERJ3GEYJ474	M.RESISTOR CH 1/16W 470K	1	
R6112-17		ERJ3GEYJ104	M.RESISTOR CH 1/16W 100K	6	
R6118,19		ERJ3GEYJ103	M.RESISTOR CH 1/16W 10K	2	
R6120-27		ERJ3GEYJ104	M.RESISTOR CH 1/16W 100K	8	
R6128		ERJ3GEYJ562	M.RESISTOR CH 1/16W 5.6K	1	
R6129,30		ERJ3GEYJ104	M.RESISTOR CH 1/16W 100K	2	
R6131-33		ERJ3GEYJ562	M.RESISTOR CH 1/16W 5.6K	3	
R6134-38		ERJ3GEYJ103	M.RESISTOR CH 1/16W 10K	5	
R6140-51		ERJ3GEYJ152	M.RESISTOR CH 1/16W 1.5K	12	
R6152-54		ERJ3GEYJ103	M.RESISTOR CH 1/16W 10K	3	
R6155		ERJ3GEYJ105	M.RESISTOR CH 1/16W 1M	1	
R6156		ERJ3GEYJ562	M.RESISTOR CH 1/16W 5.6K	1	
R6157,58		ERJ3GEYJ103	M.RESISTOR CH 1/16W 10K	2	
R6159		ERJ3GEYJ330	M.RESISTOR CH 1/16W 33	1	
R6170-77		ERJ3GEYJ104	M.RESISTOR CH 1/16W 100K	8	
R6178,79		ERJ3GEYJ471	M.RESISTOR CH 1/16W 470	2	
R6180-87		ERJ3GEYJ103	M.RESISTOR CH 1/16W 10K	8	
R6188		ERJ3GEY0R00	M.RESISTOR CH 1/16W 0	1	
R6189		ERJ3GEYJ103	M.RESISTOR CH 1/16W 10K	1	
SW6001		VSS0367-08B	SWITCH	1	
TP6001-04		VJR0646	TEST POINT	4	
TPG6001,02		VJR0646	TEST POINT	2	
X6001		VSX0519	CRYSTAL OSCILLATOR	1	
X6002		VSX0541	CRYSTAL OSCILLATOR	1	
X6003		VSX0519	CRYSTAL OSCILLATOR	1	

Ref.No.		Part No.	Part Name & Description	Pcs	Remarks
			MISCELLANEOUS		
		VML2143	LEVER. ARM.	1	
		VML2144	LEVER. ARM.	1	
		VXA4420	P.C.BOARD SHIELD PLATE	1	
		XTV3+6FFR	SCREW	5	

S8 AUDIO D/A VEP84155A

Ref.No.		Part No.	Part Name & Description	Pcs	Remarks
S8	■	VEP84155A	P.C.BOARD W/COMPONENT		
			AUDIO D/A		
			CAPACITORS		
C4001		ECA1HAXL2R2	.CAPACITOR V	1	
C4002		ECA1CAXL220	.CAPACITOR V	1	
C4003		ECUM1H391JCN	C.CAPACITOR CH 50V 390P	1	
C4004-06		ECUM1H102JCN	C.CAPACITOR CH 50V 1000P	3	
C4007		ECA1CAXN330	.CAPACITOR V	1	
C4008		ECHU1C472G	P.CAPACITOR 16V 4700P	1	
C4009,10		ECA1CAXN330	.CAPACITOR V	2	
C4011		ECUM1H470JCN	C.CAPACITOR CH 50V 47P	1	
C4012,13		ECA1EAXL100	.CAPACITOR V	2	
C4014,15		ECA1EAXL101	.CAPACITOR V	2	
C4016		ECUM1H470JCN	C.CAPACITOR CH 50V 47P	1	
C4017,18		ECA1EAXL100	.CAPACITOR V	2	
C4019,20		ECA1EAXL101	.CAPACITOR V	2	
C4021-30		ECUM1E104ZFN	C.CAPACITOR CH 25V 0.1U	10	
C4040		ECA1EAXL101	.CAPACITOR V	1	
C4041,42		ECUM1E104ZFN	C.CAPACITOR CH 25V 0.1U	2	
C4044		ECUM1E104ZFN	C.CAPACITOR CH 25V 0.1U	1	
C4045,46		ECA1EAXL101	.CAPACITOR V	2	
C4047,48		ECUM1E104ZFN	C.CAPACITOR CH 25V 0.1U	2	
C4050		ECUM1E104ZFN	C.CAPACITOR CH 25V 0.1U	1	
C4051		ECA1EAXL101	.CAPACITOR V	1	
C4062,63		ECUM1E104ZFN	C.CAPACITOR CH 25V 0.1U	2	
C4065		ECUM1E104ZFN	C.CAPACITOR CH 25V 0.1U	1	
C4066		ECA1EAXL101	.CAPACITOR V	1	
C4068,69		ECUM1E104ZFN	C.CAPACITOR CH 25V 0.1U	2	
C4071		ECUM1E104ZFN	C.CAPACITOR CH 25V 0.1U	1	
C4072		ECA1AAXL101	.CAPACITOR V	1	
C4073,74		ECUM1E104ZFN	C.CAPACITOR CH 25V 0.1U	2	
C4076,77		ECUM1E104ZFN	C.CAPACITOR CH 25V 0.1U	2	
C4079		ECUM1E104ZFN	C.CAPACITOR CH 25V 0.1U	1	
C4080		ECA1EAXL101	.CAPACITOR V	1	
C4081		ECA1HAXL2R2	.CAPACITOR V	1	
C4082		ECA1CAXL220	.CAPACITOR V	1	
C4083		ECUM1H391JCN	C.CAPACITOR CH 50V 390P	1	
C4084-86		ECUM1H102JCN	C.CAPACITOR CH 50V 1000P	3	
C4087		ECA1CAXN330	.CAPACITOR V	1	
C4088		ECHU1C472G	P.CAPACITOR 16V 4700P	1	
C4089,90		ECA1CAXN330	.CAPACITOR V	2	
C4091		ECUM1H470JCN	C.CAPACITOR CH 50V 47P	1	
C4092,93		ECA1EAXL100	.CAPACITOR V	2	
C4094,95		ECA1EAXL101	.CAPACITOR V	2	
C4096		ECUM1H470JCN	C.CAPACITOR CH 50V 47P	1	
C4097,98		ECA1EAXL100	.CAPACITOR V	2	
C4099,00		ECA1EAXL101	.CAPACITOR V	2	
C4101-10		ECUM1E104ZFN	C.CAPACITOR CH 25V 0.1U	10	
C4120		ECA1EAXL101	.CAPACITOR V	1	
C4121,22		ECUM1E104ZFN	C.CAPACITOR CH 25V 0.1U	2	
C4124		ECUM1E104ZFN	C.CAPACITOR CH 25V 0.1U	1	
C4125,26		ECA1EAXL101	.CAPACITOR V	2	
C4127,28		ECUM1E104ZFN	C.CAPACITOR CH 25V 0.1U	2	
C4130		ECUM1E104ZFN	C.CAPACITOR CH 25V 0.1U	1	
C4131		ECA1EAXL101	.CAPACITOR V	1	
C4141		ECA1HAXL2R2	.CAPACITOR V	1	
C4142		ECA1CAXL220	.CAPACITOR V	1	
C4143		ECUM1H391JCN	C.CAPACITOR CH 50V 390P	1	
C4144-46		ECUM1H102JCN	C.CAPACITOR CH 50V 1000P	3	
C4147		ECA1CAXN330	.CAPACITOR V	1	
C4148		ECHU1C472G	P.CAPACITOR 16V 4700P	1	
C4149,50		ECA1CAXN330	.CAPACITOR V	2	
C4151		ECUM1H470JCN	C.CAPACITOR CH 50V 47P	1	
C4152,53		ECA1EAXL100	.CAPACITOR V	2	
C4154,55		ECA1EAXL101	.CAPACITOR V	2	
C4156		ECUM1H470JCN	C.CAPACITOR CH 50V 47P	1	
C4157,58		ECA1EAXL100	.CAPACITOR V	2	
C4159,60		ECA1EAXL101	.CAPACITOR V	2	

Ref.No.		Part No.	Part Name & Description	Pcs	Remarks
C4161-70		ECUM1E104ZFN	C.CAPACITOR CH 25V 0.1U	10	
C4180		ECA1EAXL101	.CAPACITOR V	1	
C4181,82		ECUM1E104ZFN	C.CAPACITOR CH 25V 0.1U	2	
C4184		ECUM1E104ZFN	C.CAPACITOR CH 25V 0.1U	1	
C4185,86		ECA1EAXL101	.CAPACITOR V	2	
C4187,88		ECUM1E104ZFN	C.CAPACITOR CH 25V 0.1U	2	
C4190		ECUM1E104ZFN	C.CAPACITOR CH 25V 0.1U	1	
C4191		ECA1EAXL101	.CAPACITOR V	1	
C4203		ECUM1E104ZFN	C.CAPACITOR CH 25V 0.1U	1	
C4205		ECUM1E104ZFN	C.CAPACITOR CH 25V 0.1U	1	
C4206		ECA1EAXL101	.CAPACITOR V	1	
C4209		ECUM1E104ZFN	C.CAPACITOR CH 25V 0.1U	1	
C4211		ECUM1E104ZFN	C.CAPACITOR CH 25V 0.1U	1	
C4212		ECA1AAXL101	.CAPACITOR V	1	
C4213,14		ECUM1E104ZFN	C.CAPACITOR CH 25V 0.1U	2	
C4217		ECUM1E104ZFN	C.CAPACITOR CH 25V 0.1U	1	
C4219		ECUM1E104ZFN	C.CAPACITOR CH 25V 0.1U	1	
C4220		ECA1EAXL101	.CAPACITOR V	1	
C4221		ECA1HAXL2R2	.CAPACITOR V	1	
C4222		ECA1CAXL220	.CAPACITOR V	1	
C4223		ECUM1H391JCN	C.CAPACITOR CH 50V 390P	1	
C4224-26		ECUM1H102JCN	C.CAPACITOR CH 50V 1000P	3	
C4227		ECA1CAXN330	.CAPACITOR V	1	
C4228		ECHU1C472G	P.CAPACITOR 16V 4700P	1	
C4229,30		ECA1CAXN330	.CAPACITOR V	2	
C4231		ECUM1H470JCN	C.CAPACITOR CH 50V 47P	1	
C4232,33		ECA1EAXL100	.CAPACITOR V	2	
C4234,35		ECA1EAXL101	.CAPACITOR V	2	
C4236		ECUM1H470JCN	C.CAPACITOR CH 50V 47P	1	
C4237,38		ECA1EAXL100	.CAPACITOR V	2	
C4239,40		ECA1EAXL101	.CAPACITOR V	2	
C4241-50		ECUM1E104ZFN	C.CAPACITOR CH 25V 0.1U	10	
C4260		ECA1EAXL101	.CAPACITOR V	1	
C4261,62		ECUM1E104ZFN	C.CAPACITOR CH 25V 0.1U	2	
C4264		ECUM1E104ZFN	C.CAPACITOR CH 25V 0.1U	1	
C4265,66		ECA1EAXL101	.CAPACITOR V	2	
C4267,68		ECUM1E104ZFN	C.CAPACITOR CH 25V 0.1U	2	
C4270		ECUM1E104ZFN	C.CAPACITOR CH 25V 0.1U	1	
C4271		ECA1EAXL101	.CAPACITOR V	1	
C4281		ECA1HAXL2R2	.CAPACITOR V	1	
C4282		ECA1CAXL220	.CAPACITOR V	1	
C4283		ECUM1H391JCN	C.CAPACITOR CH 50V 390P	1	
C4284-86		ECUM1H102JCN	C.CAPACITOR CH 50V 1000P	3	
C4287		ECA1CAXN330	.CAPACITOR V	1	
C4288		ECHU1C472G	P.CAPACITOR 16V 4700P	1	
C4289,90		ECA1CAXN330	.CAPACITOR V	2	
C4291		ECUM1H470JCN	C.CAPACITOR CH 50V 47P	1	
C4292,93		ECA1EAXL100	.CAPACITOR V	2	
C4294,95		ECA1EAXL101	.CAPACITOR V	2	
C4296		ECUM1H470JCN	C.CAPACITOR CH 50V 47P	1	
C4297,98		ECA1EAXL100	.CAPACITOR V	2	
C4299,00		ECA1EAXL101	.CAPACITOR V	2	
C4301-10		ECUM1E104ZFN	C.CAPACITOR CH 25V 0.1U	10	
C4320		ECA1EAXL101	.CAPACITOR V	1	
C4321,22		ECUM1E104ZFN	C.CAPACITOR CH 25V 0.1U	2	
C4324		ECUM1E104ZFN	C.CAPACITOR CH 25V 0.1U	1	
C4325		ECA1EAXL101	.CAPACITOR V	1	
C4343		ECUM1E104ZFN	C.CAPACITOR CH 25V 0.1U	1	
C4345		ECUM1E104ZFN	C.CAPACITOR CH 25V 0.1U	1	
C4346		ECA1EAXL101	.CAPACITOR V	1	
C4349		ECUM1E104ZFN	C.CAPACITOR CH 25V 0.1U	1	
C4351		ECUM1E104ZFN	C.CAPACITOR CH 25V 0.1U	1	
C4352		ECA1AAXL101	.CAPACITOR V	1	
C4353,54		ECUM1E104ZFN	C.CAPACITOR CH 25V 0.1U	2	
C4357		ECUM1E104ZFN	C.CAPACITOR CH 25V 0.1U	1	
C4359		ECUM1E104ZFN	C.CAPACITOR CH 25V 0.1U	1	
C4360		ECA1EAXL101	.CAPACITOR V	1	
C4361		ECA1HAXL2R2	.CAPACITOR V	1	
C4362		ECA1CAXL220	.CAPACITOR V	1	
C4363		ECUM1H391JCN	C.CAPACITOR CH 50V 390P	1	
C4364-66		ECUM1H102JCN	C.CAPACITOR CH 50V 1000P	3	
C4367		ECA1CAXN330	.CAPACITOR V	1	
C4368		ECHU1C472G	P.CAPACITOR 16V 4700P	1	
C4369,70		ECA1CAXN330	.CAPACITOR V	2	
C4371		ECUM1H470JCN	C.CAPACITOR CH 50V 47P	1	

S8

Ref.No.		Part No.	Part Name & Description	Pcs	Remarks
C4372,73		ECA1EAXL100	.CAPACITOR V	2	
C4374,75		ECA1EAXL101	.CAPACITOR V	2	
C4376		ECUM1H470JCN	C.CAPACITOR CH 50V 47P	1	
C4377,78		ECA1EAXL100	.CAPACITOR V	2	
C4379,80		ECA1EAXL101	.CAPACITOR V	2	
C4381-90		ECUM1E104ZFN	C.CAPACITOR CH 25V 0.1U	10	
C4406		ECA1EAXL101	.CAPACITOR V	1	
C4407,08		ECUM1E104ZFN	C.CAPACITOR CH 25V 0.1U	2	
C4410		ECUM1E104ZFN	C.CAPACITOR CH 25V 0.1U	1	
C4411		ECA1EAXL101	.CAPACITOR V	1	
C4421,22		ECA1CAXN330	.CAPACITOR V	2	
C4423,24		ECUM1E104ZFN	C.CAPACITOR CH 25V 0.1U	2	
C4425,26		ECA1CAXN330	.CAPACITOR V	2	
C4427,28		ECUM1E104ZFN	C.CAPACITOR CH 25V 0.1U	2	
C4431		ECUM1H330JCN	C.CAPACITOR CH 50V 33P	1	
C4432-35		ECUM1E104ZFN	C.CAPACITOR CH 25V 0.1U	4	
C4436		ECA1EAXL100	.CAPACITOR V	1	
C4437		ECUM1H330JCN	C.CAPACITOR CH 50V 33P	1	
C4438-41		ECUM1E104ZFN	C.CAPACITOR CH 25V 0.1U	4	
C4442,43		ECA1EAXL100	.CAPACITOR V	2	
C4444		ECUM1H220JCN	C.CAPACITOR CH 50V 22P	1	
C4445		ECA1CAXL221C	.CAPACITOR V	1	
C4446		ECA1EAXL100	.CAPACITOR V	1	
C4447		ECUM1H220JCN	C.CAPACITOR CH 50V 22P	1	
C4448		ECA1CAXL221C	.CAPACITOR V	1	
C4449		ECA1HAXL010F	.CAPACITOR V	1	
C4456-66		ECUM1H103ZFN	C.CAPACITOR CH 50V 0.01U	11	
C4468-71		ECUM1H103ZFN	C.CAPACITOR CH 50V 0.01U	4	
C4472		ECUM1H101JCN	C.CAPACITOR CH 50V 100P	1	
C4473-82		ECUM1H103ZFN	C.CAPACITOR CH 50V 0.01U	10	
C4483,84		ECA1AAXL101	.CAPACITOR V	2	
D4001		MA151K	DIODE	1	
D4002,03		MA157	DIODE	2	
D4004,05		MA151K	DIODE	2	
D4006,07		MA157	DIODE	2	
D4008,09		MA151K	DIODE	2	
D4010,11		MA157	DIODE	2	
D4012,13		MA151K	DIODE	2	
D4014,15		MA157	DIODE	2	
D4016,17		MA151K	DIODE	2	
D4018,19		MA157	DIODE	2	
D4020,21		MA151K	DIODE	2	
D4022,23		MA157	DIODE	2	
D4024-27		MA151K	DIODE	4	
FL4001-03		VLF0576	FILTER	3	
FL4006,07		VLF0576	FILTER	2	
FL4012,13		VLF0576	FILTER	2	
FL4021,22		VLF0576	FILTER	2	
FL4027,28		VLF0576	FILTER	2	
FL4036		VLF0576	FILTER	1	
FL4043		VLF0576	FILTER	1	
FL4046		VLF0931	COIL	1	
FL4047		VLF0576	FILTER	1	
IC4001		YSF210BM	IC	1	
IC4002		AD1862NJ	IC	1	
IC4003,04		NJM4580ED	IC	2	
IC4005		NJM2043MD	IC	1	
IC4006		AD1862NJ	IC	1	
IC4007,08		NJM4580ED	IC	2	
IC4009		NJM2043MD	IC	1	
IC4010		NJM78L12UA	IC	1	
IC4011		NJM78L05UA	IC	1	
IC4012		NJM79L12UA	IC	1	
IC4014		AN78N12	IC	1	
IC4015		AN79N12	IC	1	
IC4018		AN78N12	IC	1	

Ref.No.		Part No.	Part Name & Description	Pcs	Remarks
IC4019		AN79N12	IC	1	
IC4021		YSF210BM	IC	1	
IC4022		AD1862NJ	IC	1	
IC4023,24		NJM4580ED	IC	2	
IC4025		NJM2043MD	IC	1	
IC4026		AD1862NJ	IC	1	
IC4027,28		NJM4580ED	IC	2	
IC4029		NJM2043MD	IC	1	
IC4030		NJM78L12UA	IC	1	
IC4031		NJM78L05UA	IC	1	
IC4032		NJM79L12UA	IC	1	
IC4034		AN78N12	IC	1	
IC4035		AN79N12	IC	1	
IC4038		AN78N12	IC	1	
IC4039		AN79N12	IC	1	
IC4041		YSF210BM	IC	1	
IC4042		AD1862NJ	IC	1	
IC4043,44		NJM4580ED	IC	2	
IC4045		NJM2043MD	IC	1	
IC4046		AD1862NJ	IC	1	
IC4047,48		NJM4580ED	IC	2	
IC4049		NJM2043MD	IC	1	
IC4050		NJM78L12UA	IC	1	
IC4051		NJM78L05UA	IC	1	
IC4052		NJM79L12UA	IC	1	
IC4054		AN78N12	IC	1	
IC4059		AN79N12	IC	1	
IC4061-63		NJM4580ED	IC	3	
IC4064		AD7538JR	IC	1	
IC4065		NJM4580ED	IC	1	
IC4066		AD7538JR	IC	1	
IC4067		M5206P	IC	1	
IC4068		AN6558	IC	1	
IC4069		NJM2904M	IC	1	
IC4070		MC10125L	IC	1	
IC4071		SN74HCT541N	IC	1	
IC4072		SN74ALS541NS	IC	1	
IC4073		MC74HC04AF	IC	1	
IC4074		SN74HCT541N	IC	1	
IC4075		MC74HC157AF	IC	1	
IC4076-78		SN74LS541NS	IC	3	
IC4079		MC74HC574AF	IC	1	
IC4081		MC74HC04AF	IC	1	
IC4082		MC74HC138AF	IC	1	
IC4083		SN74HCT541N	IC	1	
IC4084		MC74HC138AF	IC	1	
IC4085		SN74HCT541N	IC	1	
IC4086		MC74HC138AF	IC	1	
IC4087,88		SN74S1051NS	IC	2	
IC4089,90		UPD71055GB	IC	2	
IC4091		SN74HCT541N	IC	1	
IC4092		SN74S1051NS	IC	1	
IC4093		SN74HCT541N	IC	1	
P015,16		VJP3454B096	CONNECTOR (MALE)	2	
P4001-06		VJP1230T	CONNECTOR (MALE) 3P	6	
Q4001		UN2213	TRANSISTOR-RESISTOR	1	
Q4002		2SD601-R	TRANSISTOR CHIP	1	(R)
Q4003		2SD1994A-QR	TRANSISTOR	1	
Q4004		2SB1322A-QR	TRANSISTOR	1	
Q4005		2SD1994A-QR	TRANSISTOR	1	
Q4006		2SB1322A-QR	TRANSISTOR	1	
Q4007		2SD601-R	TRANSISTOR CHIP	1	(R)
Q4008		UN2213	TRANSISTOR-RESISTOR	1	
Q4009		2SD601-R	TRANSISTOR CHIP	1	(R)
Q4010		2SD1994A-QR	TRANSISTOR	1	
Q4011		2SB1322A-QR	TRANSISTOR	1	
Q4012		2SD1994A-QR	TRANSISTOR	1	
Q4013		2SB1322A-QR	TRANSISTOR	1	
Q4014		2SD601-R	TRANSISTOR CHIP	1	(R)

Ref.No.		Part No.	Part Name & Description	Pcs	Remarks
Q4015		UN2213	TRANSISTOR-RESISTOR	1	
Q4016		2SD601-R	TRANSISTOR CHIP	1	(R)
Q4017		2SD1994A-QR	TRANSISTOR	1	
Q4018		2SB1322A-QR	TRANSISTOR	1	
Q4019		2SD1994A-QR	TRANSISTOR	1	
Q4020		2SB1322A-QR	TRANSISTOR	1	
Q4021		2SD601-R	TRANSISTOR CHIP	1	(R)
Q4022		UN2213	TRANSISTOR-RESISTOR	1	
Q4023		2SD601-R	TRANSISTOR CHIP	1	(R)
Q4024		2SD1994A-QR	TRANSISTOR	1	
Q4025		2SB1322A-QR	TRANSISTOR	1	
Q4026		2SD1994A-QR	TRANSISTOR	1	
Q4027		2SB1322A-QR	TRANSISTOR	1	
Q4028		2SD601-R	TRANSISTOR CHIP	1	(R)
Q4029		UN2213	TRANSISTOR-RESISTOR	1	
Q4030		2SD601-R	TRANSISTOR CHIP	1	(R)
Q4031		2SD1994A-QR	TRANSISTOR	1	
Q4032		2SB1322A-QR	TRANSISTOR	1	
Q4033		2SD1994A-QR	TRANSISTOR	1	
Q4034		2SB1322A-QR	TRANSISTOR	1	
Q4035		2SD601-R	TRANSISTOR CHIP	1	(R)
Q4036		UN2213	TRANSISTOR-RESISTOR	1	
Q4037		2SD601-R	TRANSISTOR CHIP	1	(R)
Q4038		2SD1994A-QR	TRANSISTOR	1	
Q4039		2SB1322A-QR	TRANSISTOR	1	
Q4040		2SD1994A-QR	TRANSISTOR	1	
Q4041		2SB1322A-QR	TRANSISTOR	1	
Q4042		2SD601-R	TRANSISTOR CHIP	1	(R)
Q4043		UN2213	TRANSISTOR-RESISTOR	1	
Q4044		2SD601-R	TRANSISTOR CHIP	1	(R)
Q4045		UN2213	TRANSISTOR-RESISTOR	1	
Q4046		2SD601-R	TRANSISTOR CHIP	1	(R)
Q4047		UN2213	TRANSISTOR-RESISTOR	1	
Q4048		2SD601-R	TRANSISTOR CHIP	1	(R)
			RESISTORS		
R4001,02		ERJ6GEYJ474	M.RESISTOR CH 1/10W 470K	2	
R4003-05		ERJ6GEYJ471	M.RESISTOR CH 1/10W 470	3	
R4006,07		VRE0034E332	M.RESISTOR CH 1/10W 3.3K	2	
R4008		VRE0034E102	M.RESISTOR CH 1/10W 1K	1	
R4009,10		VRE0034E472	M.RESISTOR CH 1/10W 4.7K	2	
R4011,12		ERJ6GEYJ103	M.RESISTOR CH 1/10W 10K	2	
R4013		VRE0034E223	M.RESISTOR CH 1/10W 22K	1	
R4014		VRE0034E222	M.RESISTOR CH 1/10W 2.2K	1	
R4015		VRE0034E102	M.RESISTOR CH 1/10W 1K	1	
R4016		VRE0034E123	M.RESISTOR CH 1/10W 12K	1	
R4017		VRE0034E472	M.RESISTOR CH 1/10W 4.7K	1	
R4018		ERJ6GEYJ105	M.RESISTOR CH 1/10W 1M	1	
R4019		VRE0034E103	M.RESISTOR CH 1/10W 10K	1	
R4020		VRE0034E79C	M.RESISTOR CH 1/10W	1	
R4021		VRE0034E60B	M.RESISTOR CH 1/10W 6	1	
R4022		ERJ6GEY0R00	M.RESISTOR CH 1/10W 0	1	
R4023		VRE0034E20B	M.RESISTOR CH 1/10W 2	1	
R4024		VRE0034E272	M.RESISTOR CH 1/10W 2.7K	1	
R4025		VRE0034E472	M.RESISTOR CH 1/10W 4.7K	1	
R4026		VRE0034E682	M.RESISTOR CH 1/10W 6.8K	1	
R4027		VRE0034E103	M.RESISTOR CH 1/10W 10K	1	
R4028,29		VRE0034E472	M.RESISTOR CH 1/10W 4.7K	2	
R4030		ERJ6GEYJ105	M.RESISTOR CH 1/10W 1M	1	
R4031,32		VRE0034E153	M.RESISTOR CH 1/10W 15K	2	
R4033		VRE0034E150	M.RESISTOR CH 1/10W 15	1	
R4034		ERJ6GEYJ100	M.RESISTOR CH 1/10W 10	1	
R4035,36		ERJ6GEYJ562	M.RESISTOR CH 1/10W 5.6K	2	
R4037,38		ERJ14YJ100	M.RESISTOR 1/4W 10	2	
R4039		ERJ14YJ220	M.RESISTOR 1/4W 22	1	
R4040		ERJ6GEYJ103	M.RESISTOR CH 1/10W 10K	1	
R4041,42		VRE0034E472	M.RESISTOR CH 1/10W 4.7K	2	
R4043		ERJ6GEYJ105	M.RESISTOR CH 1/10W 1M	1	
R4044,45		VRE0034E153	M.RESISTOR CH 1/10W 15K	2	
R4047		ERJ6GEYJ100	M.RESISTOR CH 1/10W 10	1	
R4048,49		ERJ6GEYJ562	M.RESISTOR CH 1/10W 5.6K	2	
R4050,51		ERJ14YJ100	M.RESISTOR 1/4W 10	2	
R4052		ERJ14YJ220	M.RESISTOR 1/4W 22	1	

Ref.No.		Part No.	Part Name & Description	Pcs	Remarks
R4053		ERJ6GEYJ103	M.RESISTOR CH 1/10W 10K	1	
R4054		ERJ6GEYJ473	M.RESISTOR CH 1/10W 47K	1	
R4055		ERJ6GEYJ681	M.RESISTOR CH 1/10W 680	1	
R4056-60		ERJ6GEY0R00	M.RESISTOR CH 1/10W 0	5	
R4061,62		ERJ6GEYJ474	M.RESISTOR CH 1/10W 470K	2	
R4063-65		ERJ6GEYJ471	M.RESISTOR CH 1/10W 470	3	
R4066,67		VRE0034E332	M.RESISTOR CH 1/10W 3.3K	2	
R4068		VRE0034E102	M.RESISTOR CH 1/10W 1K	1	
R4069,70		VRE0034E472	M.RESISTOR CH 1/10W 4.7K	2	
R4071,72		ERJ6GEYJ103	M.RESISTOR CH 1/10W 10K	2	
R4073		VRE0034E223	M.RESISTOR CH 1/10W 22K	1	
R4074		VRE0034E222	M.RESISTOR CH 1/10W 2.2K	1	
R4075		VRE0034E102	M.RESISTOR CH 1/10W 1K	1	
R4076		VRE0034E123	M.RESISTOR CH 1/10W 12K	1	
R4077		VRE0034E472	M.RESISTOR CH 1/10W 4.7K	1	
R4078		ERJ6GEYJ105	M.RESISTOR CH 1/10W 1M	1	
R4079		VRE0034E103	M.RESISTOR CH 1/10W 10K	1	
R4080		VRE0034E79C	M.RESISTOR CH 1/10W	1	
R4081		VRE0034E60B	M.RESISTOR CH 1/10W 6	1	
R4082		ERJ6GEY0R00	M.RESISTOR CH 1/10W 0	1	
R4083		VRE0034E20B	M.RESISTOR CH 1/10W 2	1	
R4084		VRE0034E272	M.RESISTOR CH 1/10W 2.7K	1	
R4085		VRE0034E472	M.RESISTOR CH 1/10W 4.7K	1	
R4086		VRE0034E682	M.RESISTOR CH 1/10W 6.8K	1	
R4087		VRE0034E103	M.RESISTOR CH 1/10W 10K	1	
R4088,89		VRE0034E472	M.RESISTOR CH 1/10W 4.7K	2	
R4090		ERJ6GEYJ105	M.RESISTOR CH 1/10W 1M	1	
R4091,92		VRE0034E153	M.RESISTOR CH 1/10W 15K	2	
R4093		VRE0034E150	M.RESISTOR CH 1/10W 15	1	
R4094		ERJ6GEYJ100	M.RESISTOR CH 1/10W 10	1	
R4095,96		ERJ6GEYJ562	M.RESISTOR CH 1/10W 5.6K	2	
R4097,98		ERJ14YJ100	M.RESISTOR 1/4W 10	2	
R4099		ERJ14YJ220	M.RESISTOR 1/4W 22	1	
R4100		ERJ6GEYJ103	M.RESISTOR CH 1/10W 10K	1	
R4101,02		VRE0034E472	M.RESISTOR CH 1/10W 4.7K	2	
R4103		ERJ6GEYJ105	M.RESISTOR CH 1/10W 1M	1	
R4104,05		VRE0034E153	M.RESISTOR CH 1/10W 15K	2	
R4107		ERJ6GEYJ100	M.RESISTOR CH 1/10W 10	1	
R4108,09		ERJ6GEYJ562	M.RESISTOR CH 1/10W 5.6K	2	
R4110,11		ERJ14YJ100	M.RESISTOR 1/4W 10	2	
R4112		ERJ14YJ220	M.RESISTOR 1/4W 22	1	
R4113		ERJ6GEYJ103	M.RESISTOR CH 1/10W 10K	1	
R4114		ERJ6GEYJ473	M.RESISTOR CH 1/10W 47K	1	
R4115		ERJ6GEYJ681	M.RESISTOR CH 1/10W 680	1	
R4116-20		ERJ6GEY0R00	M.RESISTOR CH 1/10W 0	5	
R4121,22		ERJ6GEYJ474	M.RESISTOR CH 1/10W 470K	2	
R4123-25		ERJ6GEYJ471	M.RESISTOR CH 1/10W 470	3	
R4126,27		VRE0034E332	M.RESISTOR CH 1/10W 3.3K	2	
R4128		VRE0034E102	M.RESISTOR CH 1/10W 1K	1	
R4129,30		VRE0034E472	M.RESISTOR CH 1/10W 4.7K	2	
R4131,32		ERJ6GEYJ103	M.RESISTOR CH 1/10W 10K	2	
R4133		VRE0034E223	M.RESISTOR CH 1/10W 22K	1	
R4134		VRE0034E222	M.RESISTOR CH 1/10W 2.2K	1	
R4135		VRE0034E102	M.RESISTOR CH 1/10W 1K	1	
R4136		VRE0034E123	M.RESISTOR CH 1/10W 12K	1	
R4137		VRE0034E472	M.RESISTOR CH 1/10W 4.7K	1	
R4138		ERJ6GEYJ105	M.RESISTOR CH 1/10W 1M	1	
R4139		VRE0034E103	M.RESISTOR CH 1/10W 10K	1	
R4140		VRE0034E79C	M.RESISTOR CH 1/10W	1	
R4141		VRE0034E60B	M.RESISTOR CH 1/10W 6	1	
R4142		ERJ6GEY0R00	M.RESISTOR CH 1/10W 0	1	
R4143		VRE0034E20B	M.RESISTOR CH 1/10W 2	1	
R4144		VRE0034E272	M.RESISTOR CH 1/10W 2.7K	1	
R4145		VRE0034E472	M.RESISTOR CH 1/10W 4.7K	1	
R4146		VRE0034E682	M.RESISTOR CH 1/10W 6.8K	1	
R4147		VRE0034E103	M.RESISTOR CH 1/10W 10K	1	
R4148,49		VRE0034E472	M.RESISTOR CH 1/10W 4.7K	2	
R4150		ERJ6GEYJ105	M.RESISTOR CH 1/10W 1M	1	
R4151,52		VRE0034E153	M.RESISTOR CH 1/10W 15K	2	
R4153		VRE0034E150	M.RESISTOR CH 1/10W 15	1	
R4154		ERJ6GEYJ100	M.RESISTOR CH 1/10W 10	1	
R4155,56		ERJ6GEYJ562	M.RESISTOR CH 1/10W 5.6K	2	
R4157,58		ERJ14YJ100	M.RESISTOR 1/4W 10	2	
R4159		ERJ14YJ220	M.RESISTOR 1/4W 22	1	
R4160		ERJ6GEYJ103	M.RESISTOR CH 1/10W 10K	1	

Ref.No.		Part No.	Part Name & Description	Pcs	Remarks
R4161,62		VRE0034E472	M.RESISTOR CH 1/10W 4.7K	2	
R4163		ERJ6GEYJ105	M.RESISTOR CH 1/10W 1M	1	
R4164,65		VRE0034E153	M.RESISTOR CH 1/10W 15K	2	
R4167		ERJ6GEYJ100	M.RESISTOR CH 1/10W 10	1	
R4168,69		ERJ6GEYJ562	M.RESISTOR CH 1/10W 5.6K	2	
R4170,71		ERJ14YJ100	M.RESISTOR 1/4W 10	2	
R4172		ERJ14YJ220	M.RESISTOR 1/4W 22	1	
R4173		ERJ6GEYJ103	M.RESISTOR CH 1/10W 10K	1	
R4174		ERJ6GEYJ473	M.RESISTOR CH 1/10W 47K	1	
R4175		ERJ6GEYJ681	M.RESISTOR CH 1/10W 680	1	
R4176-80		ERJ6GEY0R00	M.RESISTOR CH 1/10W 0	5	
R4181,82		ERJ6GEYJ474	M.RESISTOR CH 1/10W 470K	2	
R4183-85		ERJ6GEYJ471	M.RESISTOR CH 1/10W 470	3	
R4186,87		VRE0034E332	M.RESISTOR CH 1/10W 3.3K	2	
R4188		VRE0034E102	M.RESISTOR CH 1/10W 1K	1	
R4189,90		VRE0034E472	M.RESISTOR CH 1/10W 4.7K	2	
R4191,92		ERJ6GEYJ103	M.RESISTOR CH 1/10W 10K	2	
R4193		VRE0034E223	M.RESISTOR CH 1/10W 22K	1	
R4194		VRE0034E222	M.RESISTOR CH 1/10W 2.2K	1	
R4195		VRE0034E102	M.RESISTOR CH 1/10W 1K	1	
R4196		VRE0034E123	M.RESISTOR CH 1/10W 12K	1	
R4197		VRE0034E472	M.RESISTOR CH 1/10W 4.7K	1	
R4198		ERJ6GEYJ105	M.RESISTOR CH 1/10W 1M	1	
R4199		VRE0034E103	M.RESISTOR CH 1/10W 10K	1	
R4200		VRE0034E79C	M.RESISTOR CH 1/10W	1	
R4201		VRE0034E60B	M.RESISTOR CH 1/10W 6	1	
R4202		ERJ6GEY0R00	M.RESISTOR CH 1/10W 0	1	
R4203		VRE0034E20B	M.RESISTOR CH 1/10W 2	1	
R4204		VRE0034E272	M.RESISTOR CH 1/10W 2.7K	1	
R4205		VRE0034E472	M.RESISTOR CH 1/10W 4.7K	1	
R4206		VRE0034E682	M.RESISTOR CH 1/10W 6.8K	1	
R4207		VRE0034E103	M.RESISTOR CH 1/10W 10K	1	
R4208,09		VRE0034E472	M.RESISTOR CH 1/10W 4.7K	2	
R4210		ERJ6GEYJ105	M.RESISTOR CH 1/10W 1M	1	
R4211,12		VRE0034E153	M.RESISTOR CH 1/10W 15K	2	
R4213		VRE0034E150	M.RESISTOR CH 1/10W 15	1	
R4214		ERJ6GEYJ100	M.RESISTOR CH 1/10W 10	1	
R4215,16		ERJ6GEYJ562	M.RESISTOR CH 1/10W 5.6K	2	
R4217,18		ERJ14YJ100	M.RESISTOR 1/4W 10	2	
R4219		ERJ14YJ220	M.RESISTOR 1/4W 22	1	
R4220		ERJ6GEYJ103	M.RESISTOR CH 1/10W 10K	1	
R4221,22		VRE0034E472	M.RESISTOR CH 1/10W 4.7K	2	
R4223		ERJ6GEYJ105	M.RESISTOR CH 1/10W 1M	1	
R4224,25		VRE0034E153	M.RESISTOR CH 1/10W 15K	2	
R4227		ERJ6GEYJ100	M.RESISTOR CH 1/10W 10	1	
R4228,29		ERJ6GEYJ562	M.RESISTOR CH 1/10W 5.6K	2	
R4230,31		ERJ14YJ100	M.RESISTOR 1/4W 10	2	
R4232		ERJ14YJ220	M.RESISTOR 1/4W 22	1	
R4233		ERJ6GEYJ103	M.RESISTOR CH 1/10W 10K	1	
R4234		ERJ6GEYJ473	M.RESISTOR CH 1/10W 47K	1	
R4235		ERJ6GEYJ681	M.RESISTOR CH 1/10W 680	1	
R4236-40		ERJ6GEY0R00	M.RESISTOR CH 1/10W 0	5	
R4241,42		ERJ6GEYJ474	M.RESISTOR CH 1/10W 470K	2	
R4243-45		ERJ6GEYJ471	M.RESISTOR CH 1/10W 470	3	
R4246,47		VRE0034E332	M.RESISTOR CH 1/10W 3.3K	2	
R4248		VRE0034E102	M.RESISTOR CH 1/10W 1K	1	
R4249,50		VRE0034E472	M.RESISTOR CH 1/10W 4.7K	2	
R4251,52		ERJ6GEYJ103	M.RESISTOR CH 1/10W 10K	2	
R4253		VRE0034E223	M.RESISTOR CH 1/10W 22K	1	
R4254		VRE0034E222	M.RESISTOR CH 1/10W 2.2K	1	
R4255		VRE0034E102	M.RESISTOR CH 1/10W 1K	1	
R4256		VRE0034E123	M.RESISTOR CH 1/10W 12K	1	
R4257		VRE0034E472	M.RESISTOR CH 1/10W 4.7K	1	
R4258		ERJ6GEYJ105	M.RESISTOR CH 1/10W 1M	1	
R4259		VRE0034E223	M.RESISTOR CH 1/10W 22K	1	
R4265		VRE0034E472	M.RESISTOR CH 1/10W 4.7K	1	
R4266		VRE0034E682	M.RESISTOR CH 1/10W 6.8K	1	
R4267		VRE0034E103	M.RESISTOR CH 1/10W 10K	1	
R4268,69		VRE0034E472	M.RESISTOR CH 1/10W 4.7K	2	
R4270		ERJ6GEYJ105	M.RESISTOR CH 1/10W 1M	1	
R4271,72		VRE0034E153	M.RESISTOR CH 1/10W 15K	2	
R4273		VRE0034E150	M.RESISTOR CH 1/10W 15	1	
R4274		ERJ6GEYJ100	M.RESISTOR CH 1/10W 10	1	
R4275,76		ERJ6GEYJ562	M.RESISTOR CH 1/10W 5.6K	2	
R4277,78		ERJ14YJ100	M.RESISTOR 1/4W 10	2	

Ref.No.		Part No.	Part Name & Description	Pcs	Remarks
R4279		ERJ14YJ220	M.RESISTOR 1/4W 22	1	
R4280		ERJ6GEYJ103	M.RESISTOR CH 1/10W 10K	1	
R4281,82		VRE0034E472	M.RESISTOR CH 1/10W 4.7K	2	
R4283		ERJ6GEYJ105	M.RESISTOR CH 1/10W 1M	1	
R4284,85		VRE0034E153	M.RESISTOR CH 1/10W 15K	2	
R4287		ERJ6GEYJ100	M.RESISTOR CH 1/10W 10	1	
R4288,89		ERJ6GEYJ562	M.RESISTOR CH 1/10W 5.6K	2	
R4290,91		ERJ14YJ100	M.RESISTOR 1/4W 10	2	
R4292		ERJ14YJ220	M.RESISTOR 1/4W 22	1	
R4293		ERJ6GEYJ103	M.RESISTOR CH 1/10W 10K	1	
R4294		ERJ6GEYJ473	M.RESISTOR CH 1/10W 47K	1	
R4295		ERJ6GEYJ681	M.RESISTOR CH 1/10W 680	1	
R4296-98		ERJ6GEY0R00	M.RESISTOR CH 1/10W 0	3	
R4301,02		ERJ6GEYJ474	M.RESISTOR CH 1/10W 470K	2	
R4303-05		ERJ6GEYJ471	M.RESISTOR CH 1/10W 470	3	
R4306,07		VRE0034E332	M.RESISTOR CH 1/10W 3.3K	2	
R4308		VRE0034E102	M.RESISTOR CH 1/10W 1K	1	
R4309,10		VRE0034E472	M.RESISTOR CH 1/10W 4.7K	2	
R4311,12		ERJ6GEYJ103	M.RESISTOR CH 1/10W 10K	2	
R4313		VRE0034E223	M.RESISTOR CH 1/10W 22K	1	
R4314		VRE0034E222	M.RESISTOR CH 1/10W 2.2K	1	
R4315		VRE0034E102	M.RESISTOR CH 1/10W 1K	1	
R4316		VRE0034E123	M.RESISTOR CH 1/10W 12K	1	
R4317		VRE0034E472	M.RESISTOR CH 1/10W 4.7K	1	
R4318		ERJ6GEYJ105	M.RESISTOR CH 1/10W 1M	1	
R4319		VRE0034E223	M.RESISTOR CH 1/10W 22K	1	
R4325		VRE0034E472	M.RESISTOR CH 1/10W 4.7K	1	
R4326		VRE0034E682	M.RESISTOR CH 1/10W 6.8K	1	
R4327		VRE0034E103	M.RESISTOR CH 1/10W 10K	1	
R4328,29		VRE0034E472	M.RESISTOR CH 1/10W 4.7K	2	
R4330		ERJ6GEYJ105	M.RESISTOR CH 1/10W 1M	1	
R4331,32		VRE0034E153	M.RESISTOR CH 1/10W 15K	2	
R4333		VRE0034E150	M.RESISTOR CH 1/10W 15	1	
R4334		ERJ6GEYJ100	M.RESISTOR CH 1/10W 10	1	
R4335,36		ERJ6GEYJ562	M.RESISTOR CH 1/10W 5.6K	2	
R4337,38		ERJ14YJ100	M.RESISTOR 1/4W 10	2	
R4339		ERJ14YJ220	M.RESISTOR 1/4W 22	1	
R4340		ERJ6GEYJ103	M.RESISTOR CH 1/10W 10K	1	
R4341,42		VRE0034E472	M.RESISTOR CH 1/10W 4.7K	2	
R4343		ERJ6GEYJ105	M.RESISTOR CH 1/10W 1M	1	
R4344,45		VRE0034E153	M.RESISTOR CH 1/10W 15K	2	
R4347		ERJ6GEYJ100	M.RESISTOR CH 1/10W 10	1	
R4348,49		ERJ6GEYJ562	M.RESISTOR CH 1/10W 5.6K	2	
R4350,51		ERJ14YJ100	M.RESISTOR 1/4W 10	2	
R4352		ERJ14YJ220	M.RESISTOR 1/4W 22	1	
R4353		ERJ6GEYJ103	M.RESISTOR CH 1/10W 10K	1	
R4354		ERJ6GEYJ473	M.RESISTOR CH 1/10W 47K	1	
R4355		ERJ6GEYJ681	M.RESISTOR CH 1/10W 680	1	
R4356		ERJ6GEY0R00	M.RESISTOR CH 1/10W 0	1	
R4359,60		ERJ6GEY0R00	M.RESISTOR CH 1/10W 0	2	
R4361		VRE0034E473	M.RESISTOR CH 1/10W 47K	1	
R4362,63		VRE0034E472	M.RESISTOR CH 1/10W 4.7K	2	
R4364		VRE0034E223	M.RESISTOR CH 1/10W 22K	1	
R4365,66		ERJ6GEYJ103	M.RESISTOR CH 1/10W 10K	2	
R4367		ERJ6GEY0R00	M.RESISTOR CH 1/10W 0	1	
R4368		VRE0034E473	M.RESISTOR CH 1/10W 47K	1	
R4369,70		VRE0034E472	M.RESISTOR CH 1/10W 4.7K	2	
R4371		VRE0034E223	M.RESISTOR CH 1/10W 22K	1	
R4372,73		ERJ6GEYJ103	M.RESISTOR CH 1/10W 10K	2	
R4375-80		ERJ6GEY0R00	M.RESISTOR CH 1/10W 0	6	
R4381		VRE0034E223	M.RESISTOR CH 1/10W 22K	1	
R4382		VRE0034E222	M.RESISTOR CH 1/10W 2.2K	1	
R4383		VRE0034E392	M.RESISTOR CH 1/10W 3.9K	1	
R4384		VRE0034E473	M.RESISTOR CH 1/10W 47K	1	
R4385		VRE0034E102	M.RESISTOR CH 1/10W 1K	1	
R4386		VRE0034E101	M.RESISTOR CH 1/10W 100	1	
R4387		VRE0034E60B	M.RESISTOR CH 1/10W 6	1	
R4388		VRE0034E20B	M.RESISTOR CH 1/10W 2	1	
R4389		VRE0034E272	M.RESISTOR CH 1/10W 2.7K	1	
R4391		VRE0034E223	M.RESISTOR CH 1/10W 22K	1	
R4392		VRE0034E222	M.RESISTOR CH 1/10W 2.2K	1	
R4393		VRE0034E392	M.RESISTOR CH 1/10W 3.9K	1	
R4394		VRE0034E473	M.RESISTOR CH 1/10W 47K	1	
R4395		VRE0034E102	M.RESISTOR CH 1/10W 1K	1	
R4396		VRE0034E101	M.RESISTOR CH 1/10W 100	1	

Ref.No.		Part No.	Part Name & Description	Pcs	Remarks
R4397		VRE0034E60B	M.RESISTOR CH 1/10W 6	1	
R4398		VRE0034E20B	M.RESISTOR CH 1/10W 2	1	
R4399		VRE0034E272	M.RESISTOR CH 1/10W 2.7K	1	
R4401		VRE0034E472	M.RESISTOR CH 1/10W 4.7K	1	
R4402		VRE0034E103	M.RESISTOR CH 1/10W 10K	1	
R4403		VRE0034E390	M.RESISTOR CH 1/10W 39	1	
R4404		VRE0034E472	M.RESISTOR CH 1/10W 4.7K	1	
R4405		VRE0034E103	M.RESISTOR CH 1/10W 10K	1	
R4406		VRE0034E390	M.RESISTOR CH 1/10W 39	1	
R4407		ERJ6GEYJ101	M.RESISTOR CH 1/10W 100	1	
R4408,09		ERJ6GEYJ103	M.RESISTOR CH 1/10W 10K	2	
R4412		ERJ6GEY0R00	M.RESISTOR CH 1/10W 0	1	
R4413		ERJ6GEYJ101	M.RESISTOR CH 1/10W 100	1	
R4414		ERJ6GEY0R00	M.RESISTOR CH 1/10W 0	1	
R4415		ERJ6GEYJ103	M.RESISTOR CH 1/10W 10K	1	
R4417-29		ERJ6GEYJ103	M.RESISTOR CH 1/10W 10K	13	
RA4001		EXBLD8103G	COMBI.R-R 10K	1	
RY4001-15		VSY2039	RELAY	15	
SW4001		VSS0187	SWITCH	1	
SW4003		VSS0187	SWITCH	1	
SW4005		VSS0187	SWITCH	1	
SW4007		VSS0187	SWITCH	1	
SW4009,10		VSS0126	SWITCH	2	
TP4001-06		VJR0646	TEST POINT	6	
TPG4001-06		VJR0646	TEST POINT	6	
VR4001		VRV0155B104	V.RESISTOR W	1	#VR
VR4002		VRV0113B103	T.RESISTOR 10K	1	
VR4003		VRV0155B104	V.RESISTOR W	1	#VR
VR4004		VRV0113B103	T.RESISTOR 10K	1	
VR4005		VRV0155B104	V.RESISTOR W	1	#VR
VR4006		VRV0113B103	T.RESISTOR 10K	1	
VR4007		VRV0155B104	V.RESISTOR W	1	#VR
VR4008		VRV0113B103	T.RESISTOR 10K	1	
VR4009		VRV0155B104	V.RESISTOR W	1	#VR
VR4010		VRV0113B103	T.RESISTOR 10K	1	
VR4011		VRV0155B104	V.RESISTOR W	1	#VR
VR4012		VRV0113B103	T.RESISTOR 10K	1	
VR4013-18		VRV0113B501	T.RESISTOR 500	6	
			MISCELLANEOUS		
		VML2143	LEVER. ARM.	1	
		VML2144	LEVER. ARM.	1	
		VXA4420	P.C.BOARD SHIELD PLATE	1	
		XTV3+6FFR	SCREW	5	

S9 AUDIO A/D VEP84156A

Ref.No.		Part No.	Part Name & Description	Pcs	Remarks
S9	■	VEP84156A	P.C.BOARD W/COMPONENT		
			AUDIO A/D		
			CAPACITORS		
C4001,02		ECA1HAXL330	.CAPACITOR V	2	
C4003		ECA1EAXL100	.CAPACITOR V	1	
C4004		ECUM1H330JCN	C.CAPACITOR CH 50V 33P	1	
C4005		ECHU1C472G	P.CAPACITOR 16V 4700P	1	
C4006		ECUM1H100DCN	C.CAPACITOR CH 50V 10P	1	
C4007		ECA1CAXN330	.CAPACITOR V	1	
C4008		ECUM1H561JCN	C.CAPACITOR CH 50V 560P	1	
C4009		ECUM1H151JCN	C.CAPACITOR CH 50V 150P	1	
C4010		ECUM1H122JN	C.CAPACITOR CH 50V 1200P	1	
C4011		ECA1CAXN330	.CAPACITOR V	1	
C4012,13		ECUM1H103KBN	C.CAPACITOR CH 50V 0.01U	2	
C4014		ECA1CAXN330	.CAPACITOR V	1	
C4015		ECUM1H561JCN	C.CAPACITOR CH 50V 560P	1	
C4016		ECUM1H151JCN	C.CAPACITOR CH 50V 150P	1	
C4017		ECUM1H122JN	C.CAPACITOR CH 50V 1200P	1	
C4018		ECA1CAXN330	.CAPACITOR V	1	
C4019,20		ECUM1H103KBN	C.CAPACITOR CH 50V 0.01U	2	
C4021-27		ECUM1H103ZFN	C.CAPACITOR CH 50V 0.01U	7	
C4028		ECA1EAXL100	.CAPACITOR V	1	
C4029		ECUM1H103ZFN	C.CAPACITOR CH 50V 0.01U	1	
C4030		ECA1EAXL100	.CAPACITOR V	1	
C4031,32		ECUM1H103ZFN	C.CAPACITOR CH 50V 0.01U	2	
C4033		ECA1EAXL100	.CAPACITOR V	1	
C4034,35		ECUM1H103ZFN	C.CAPACITOR CH 50V 0.01U	2	
C4036		ECA1EAXL100	.CAPACITOR V	1	
C4037,38		ECUM1H103ZFN	C.CAPACITOR CH 50V 0.01U	2	
C4039		ECA1EAXL100	.CAPACITOR V	1	
C4040,41		ECUM1H103ZFN	C.CAPACITOR CH 50V 0.01U	2	
C4042		ECA1EAXL100	.CAPACITOR V	1	
C4043,44		ECUM1E104ZFN	C.CAPACITOR CH 25V 0.1U	2	
C4045		ECA1EAXL100	.CAPACITOR V	1	
C4046-49		ECUM1E104ZFN	C.CAPACITOR CH 25V 0.1U	4	
C4050		ECA1EAXL101	.CAPACITOR V	1	
C4051,52		ECUM1E104ZFN	C.CAPACITOR CH 25V 0.1U	2	
C4054		ECUM1E104ZFN	C.CAPACITOR CH 25V 0.1U	1	
C4055,56		ECA1EAXL101	.CAPACITOR V	2	
C4057,58		ECUM1E104ZFN	C.CAPACITOR CH 25V 0.1U	2	
C4060		ECUM1E104ZFN	C.CAPACITOR CH 25V 0.1U	1	
C4061,62		ECA1EAXL101	.CAPACITOR V	2	
C4063,64		ECUM1E104ZFN	C.CAPACITOR CH 25V 0.1U	2	
C4066		ECUM1E104ZFN	C.CAPACITOR CH 25V 0.1U	1	
C4067		ECA1AAXL101	.CAPACITOR V	1	
C4068		ECA1EAXL101	.CAPACITOR V	1	
C4069,70		ECUM1E104ZFN	C.CAPACITOR CH 25V 0.1U	2	
C4072		ECUM1E104ZFN	C.CAPACITOR CH 25V 0.1U	1	
C4073		ECA1AAXL101	.CAPACITOR V	1	
C4074		ECA1AAXL221	.CAPACITOR V	1	
C4075		ECUM1E104ZFN	C.CAPACITOR CH 25V 0.1U	1	
C4077,78		ECUM1E104ZFN	C.CAPACITOR CH 25V 0.1U	2	
C4079		ECA1AAXL101	.CAPACITOR V	1	
C4081,82		ECA1HAXL330	.CAPACITOR V	2	
C4083		ECA1EAXL100	.CAPACITOR V	1	
C4084		ECUM1H330JCN	C.CAPACITOR CH 50V 33P	1	
C4085		ECHU1C472G	P.CAPACITOR 16V 4700P	1	
C4086		ECUM1H100DCN	C.CAPACITOR CH 50V 10P	1	
C4087		ECA1CAXN330	.CAPACITOR V	1	
C4088		ECUM1H561JCN	C.CAPACITOR CH 50V 560P	1	
C4089		ECUM1H151JCN	C.CAPACITOR CH 50V 150P	1	
C4090		ECUM1H122JN	C.CAPACITOR CH 50V 1200P	1	
C4091		ECA1CAXN330	.CAPACITOR V	1	
C4092,93		ECUM1H103KBN	C.CAPACITOR CH 50V 0.01U	2	
C4094		ECA1CAXN330	.CAPACITOR V	1	
C4095		ECUM1H561JCN	C.CAPACITOR CH 50V 560P	1	
C4096		ECUM1H151JCN	C.CAPACITOR CH 50V 150P	1	
C4097		ECUM1H122JN	C.CAPACITOR CH 50V 1200P	1	

Ref.No.		Part No.	Part Name & Description	Pcs	Remarks
C4098		ECA1CAXN330	.CAPACITOR V	1	
C4099,00		ECUM1H103KBN	C.CAPACITOR CH 50V 0.01U	2	
C4101-07		ECUM1H103ZFN	C.CAPACITOR CH 50V 0.01U	7	
C4108		ECA1EAXL100	.CAPACITOR V	1	
C4109		ECUM1H103ZFN	C.CAPACITOR CH 50V 0.01U	1	
C4110		ECA1EAXL100	.CAPACITOR V	1	
C4111,12		ECUM1H103ZFN	C.CAPACITOR CH 50V 0.01U	2	
C4113		ECA1EAXL100	.CAPACITOR V	1	
C4114,15		ECUM1H103ZFN	C.CAPACITOR CH 50V 0.01U	2	
C4116		ECA1EAXL100	.CAPACITOR V	1	
C4117,18		ECUM1H103ZFN	C.CAPACITOR CH 50V 0.01U	2	
C4119		ECA1EAXL100	.CAPACITOR V	1	
C4120,21		ECUM1H103ZFN	C.CAPACITOR CH 50V 0.01U	2	
C4122		ECA1EAXL100	.CAPACITOR V	1	
C4123,24		ECUM1E104ZFN	C.CAPACITOR CH 25V 0.1U	2	
C4125		ECA1EAXL100	.CAPACITOR V	1	
C4126-29		ECUM1E104ZFN	C.CAPACITOR CH 25V 0.1U	4	
C4161,62		ECA1HAXL330	.CAPACITOR V	2	
C4163		ECA1EAXL100	.CAPACITOR V	1	
C4164		ECUM1H330JCN	C.CAPACITOR CH 50V 33P	1	
C4165		ECHU1C472G	P.CAPACITOR 16V 4700P	1	
C4166		ECUM1H100DCN	C.CAPACITOR CH 50V 10P	1	
C4167		ECA1CAXN330	.CAPACITOR V	1	
C4168		ECUM1H561JCN	C.CAPACITOR CH 50V 560P	1	
C4169		ECUM1H151JCN	C.CAPACITOR CH 50V 150P	1	
C4170		ECUM1H122JN	C.CAPACITOR CH 50V 1200P	1	
C4171		ECA1CAXN330	.CAPACITOR V	1	
C4172,73		ECUM1H103KBN	C.CAPACITOR CH 50V 0.01U	2	
C4174		ECA1CAXN330	.CAPACITOR V	1	
C4175		ECUM1H561JCN	C.CAPACITOR CH 50V 560P	1	
C4176		ECUM1H151JCN	C.CAPACITOR CH 50V 150P	1	
C4177		ECUM1H122JN	C.CAPACITOR CH 50V 1200P	1	
C4178		ECA1CAXN330	.CAPACITOR V	1	
C4179,80		ECUM1H103KBN	C.CAPACITOR CH 50V 0.01U	2	
C4181-87		ECUM1H103ZFN	C.CAPACITOR CH 50V 0.01U	7	
C4188		ECA1EAXL100	.CAPACITOR V	1	
C4189		ECUM1H103ZFN	C.CAPACITOR CH 50V 0.01U	1	
C4190		ECA1EAXL100	.CAPACITOR V	1	
C4191,92		ECUM1H103ZFN	C.CAPACITOR CH 50V 0.01U	2	
C4193		ECA1EAXL100	.CAPACITOR V	1	
C4194,95		ECUM1H103ZFN	C.CAPACITOR CH 50V 0.01U	2	
C4196		ECA1EAXL100	.CAPACITOR V	1	
C4197,98		ECUM1H103ZFN	C.CAPACITOR CH 50V 0.01U	2	
C4199		ECA1EAXL100	.CAPACITOR V	1	
C4200,01		ECUM1H103ZFN	C.CAPACITOR CH 50V 0.01U	2	
C4202		ECA1EAXL100	.CAPACITOR V	1	
C4203,04		ECUM1E104ZFN	C.CAPACITOR CH 25V 0.1U	2	
C4205		ECA1EAXL100	.CAPACITOR V	1	
C4206-09		ECUM1E104ZFN	C.CAPACITOR CH 25V 0.1U	4	
C4210		ECA1EAXL101	.CAPACITOR V	1	
C4211,12		ECUM1E104ZFN	C.CAPACITOR CH 25V 0.1U	2	
C4214		ECUM1E104ZFN	C.CAPACITOR CH 25V 0.1U	1	
C4215,16		ECA1EAXL101	.CAPACITOR V	2	
C4217,18		ECUM1E104ZFN	C.CAPACITOR CH 25V 0.1U	2	
C4220		ECUM1E104ZFN	C.CAPACITOR CH 25V 0.1U	1	
C4221,22		ECA1EAXL101	.CAPACITOR V	2	
C4223,24		ECUM1E104ZFN	C.CAPACITOR CH 25V 0.1U	2	
C4226		ECUM1E104ZFN	C.CAPACITOR CH 25V 0.1U	1	
C4227		ECA1AAXL101	.CAPACITOR V	1	
C4228		ECA1EAXL101	.CAPACITOR V	1	
C4229,30		ECUM1E104ZFN	C.CAPACITOR CH 25V 0.1U	2	
C4232		ECUM1E104ZFN	C.CAPACITOR CH 25V 0.1U	1	
C4233		ECA1AAXL101	.CAPACITOR V	1	
C4234		ECA1AAXL221	.CAPACITOR V	1	
C4235		ECUM1E104ZFN	C.CAPACITOR CH 25V 0.1U	1	
C4237,38		ECUM1E104ZFN	C.CAPACITOR CH 25V 0.1U	2	
C4239		ECA1AAXL101	.CAPACITOR V	1	
C4241,42		ECA1HAXL330	.CAPACITOR V	2	
C4243		ECA1EAXL100	.CAPACITOR V	1	
C4244		ECUM1H330JCN	C.CAPACITOR CH 50V 33P	1	
C4245		ECHU1C472G	P.CAPACITOR 16V 4700P	1	
C4246		ECUM1H100DCN	C.CAPACITOR CH 50V 10P	1	
C4247		ECA1CAXN330	.CAPACITOR V	1	
C4248		ECUM1H561JCN	C.CAPACITOR CH 50V 560P	1	
C4249		ECUM1H151JCN	C.CAPACITOR CH 50V 150P	1	

Ref.No.		Part No.	Part Name & Description	Pcs	Remarks
C4250		ECUM1H122JN	C.CAPACITOR CH 50V 1200P	1	
C4251		ECA1CAXN330	.CAPACITOR V	1	
C4252,53		ECUM1H103KBN	C.CAPACITOR CH 50V 0.01U	2	
C4254		ECA1CAXN330	.CAPACITOR V	1	
C4255		ECUM1H561JCN	C.CAPACITOR CH 50V 560P	1	
C4256		ECUM1H151JCN	C.CAPACITOR CH 50V 150P	1	
C4257		ECUM1H122JN	C.CAPACITOR CH 50V 1200P	1	
C4258		ECA1CAXN330	.CAPACITOR V	1	
C4259,60		ECUM1H103KBN	C.CAPACITOR CH 50V 0.01U	2	
C4261-67		ECUM1H103ZFN	C.CAPACITOR CH 50V 0.01U	7	
C4268		ECA1EAXL100	.CAPACITOR V	1	
C4269		ECUM1H103ZFN	C.CAPACITOR CH 50V 0.01U	1	
C4270		ECA1EAXL100	.CAPACITOR V	1	
C4271,72		ECUM1H103ZFN	C.CAPACITOR CH 50V 0.01U	2	
C4273		ECA1EAXL100	.CAPACITOR V	1	
C4274,75		ECUM1H103ZFN	C.CAPACITOR CH 50V 0.01U	2	
C4276		ECA1EAXL100	.CAPACITOR V	1	
C4277,78		ECUM1H103ZFN	C.CAPACITOR CH 50V 0.01U	2	
C4279		ECA1EAXL100	.CAPACITOR V	1	
C4280,81		ECUM1H103ZFN	C.CAPACITOR CH 50V 0.01U	2	
C4282		ECA1EAXL100	.CAPACITOR V	1	
C4283,84		ECUM1E104ZFN	C.CAPACITOR CH 25V 0.1U	2	
C4285		ECA1EAXL100	.CAPACITOR V	1	
C4286-89		ECUM1E104ZFN	C.CAPACITOR CH 25V 0.1U	4	
C4321-27		ECUM1H103ZFN	C.CAPACITOR CH 50V 0.01U	7	
C4328		ECA1AAXL101	.CAPACITOR V	1	
C4329		ECUM1H103ZFN	C.CAPACITOR CH 50V 0.01U	1	
C4331		ECA1AAXL221	.CAPACITOR V	1	
C4332,33		ECA1EAXL101	.CAPACITOR V	2	
C4334,35		ECA1AAXL101	.CAPACITOR V	2	
C4336-38		ECUM1H103ZFN	C.CAPACITOR CH 50V 0.01U	3	
D4001,02		MA157	DIODE	2	
D4003		MA151K	DIODE	1	
D4004,05		MA157	DIODE	2	
D4006		MA151K	DIODE	1	
D4007,08		MA157	DIODE	2	
D4009		MA151K	DIODE	1	
D4010,11		MA157	DIODE	2	
D4012		MA151K	DIODE	1	
FL4001-04		VLF0576	FILTER	4	
FL4009		VLF0576	FILTER	1	
FL4011-14		VLF0576	FILTER	4	
FL4019		VLF0576	FILTER	1	
FL4021		VLF0576	FILTER	1	
IC4001,02		NJM4580ED	IC	2	
IC4003		AD7538JR	IC	1	
IC4004-08		NJM4580ED	IC	5	
IC4009		AK5326	IC	1	
IC4010		MN53040VPQ	IC	1	
IC4011		AN78N12	IC	1	
IC4012		AN79N12	IC	1	
IC4013		NJM78L05UA	IC	1	
IC4014		NJM79L05UA	IC	1	
IC4015,16		NJM4580ED	IC	2	
IC4017		AD7538JR	IC	1	
IC4018-22		NJM4580ED	IC	5	
IC4023		AK5326	IC	1	
IC4024		MN53040VPQ	IC	1	
IC4029		AN78N05	IC	1	
IC4031,32		NJM4580ED	IC	2	
IC4033		AD7538JR	IC	1	
IC4034-38		NJM4580ED	IC	5	
IC4039		AK5326	IC	1	
IC4040		MN53040VPQ	IC	1	
IC4041		AN78N12	IC	1	
IC4042		AN79N12	IC	1	

Ref.No.		Part No.	Part Name & Description	Pcs	Remarks
IC4043		NJM78L05UA	IC	1	
IC4044		NJM79L05UA	IC	1	
IC4045,46		NJM4580ED	IC	2	
IC4047		AD7538JR	IC	1	
IC4048-52		NJM4580ED	IC	5	
IC4053		AK5326	IC	1	
IC4054		MN53040VPQ	IC	1	
IC4059		AN78N05	IC	1	
IC4061,62		SN74HCT541N	IC	2	
IC4063		SN74LS541NS	IC	1	
IC4064-66		SN74HCT541N	IC	3	
IC4067		MC74HC86F	IC	1	
IC4068		MC74HC32AF	IC	1	
IC4069		MC74HC74AF	IC	1	
L4001-04		VLQ0576	COIL	4	
P017,18		VJP3454B096	CONNECTOR (MALE)	2	
Q4001		UN2213	TRANSISTOR-RESISTOR	1	
Q4002		2SD601-R	TRANSISTOR CHIP	1	(R)
Q4003		UN2213	TRANSISTOR-RESISTOR	1	
Q4004		2SD601-R	TRANSISTOR CHIP	1	(R)
Q4005		UN2213	TRANSISTOR-RESISTOR	1	
Q4006		2SD601-R	TRANSISTOR CHIP	1	(R)
Q4007		UN2213	TRANSISTOR-RESISTOR	1	
Q4008		2SD601-R	TRANSISTOR CHIP	1	(R)
			RESISTORS		
R4002		ERJ12YJ621	M.RESISTOR 1/2W 620	1	
R4004		VRE0034E103	M.RESISTOR CH 1/10W 10K	1	
R4005,06		VRE0034E473	M.RESISTOR CH 1/10W 47K	2	
R4007,08		VRE0034E123	M.RESISTOR CH 1/10W 12K	2	
R4009,10		VRE0034E333	M.RESISTOR CH 1/10W 33K	2	
R4011,12		VRE0034E332	M.RESISTOR CH 1/10W 3.3K	2	
R4013,14		VRE0034E32B	M.RESISTOR CH 1/10W 0.32	2	
R4015,16		ERJ6GEY0R00	M.RESISTOR CH 1/10W 0	2	
R4017-19		VRE0034E472	M.RESISTOR CH 1/10W 4.7K	3	
R4020		VRE0034E470	M.RESISTOR CH 1/10W 47	1	
R4021,22		VRE0034E472	M.RESISTOR CH 1/10W 4.7K	2	
R4023		VRE0034E392	M.RESISTOR CH 1/10W 3.9K	1	
R4024		VRE0034E473	M.RESISTOR CH 1/10W 47K	1	
R4025		VRE0034E102	M.RESISTOR CH 1/10W 1K	1	
R4026		VRE0034E101	M.RESISTOR CH 1/10W 100	1	
R4027,28		ERJ6GEYJ103	M.RESISTOR CH 1/10W 10K	2	
R4029		VRE0034E123	M.RESISTOR CH 1/10W 12K	1	
R4030		VRE0034E222	M.RESISTOR CH 1/10W 2.2K	1	
R4031		VRE0034E102	M.RESISTOR CH 1/10W 1K	1	
R4032		ERJ6GEYJ105	M.RESISTOR CH 1/10W 1M	1	
R4033		VRE0034E223	M.RESISTOR CH 1/10W 22K	1	
R4034		VRE0034E103	M.RESISTOR CH 1/10W 10K	1	
R4035		VRE0034E471	M.RESISTOR CH 1/10W 470	1	
R4036		VRE0034E123	M.RESISTOR CH 1/10W 12K	1	
R4037		VRE0034E152	M.RESISTOR CH 1/10W 1.5K	1	
R4038		VRE0034E222	M.RESISTOR CH 1/10W 2.2K	1	
R4039-41		VRE0034E472	M.RESISTOR CH 1/10W 4.7K	3	
R4042		VRE0034E332	M.RESISTOR CH 1/10W 3.3K	1	
R4043		VRE0034E512	M.RESISTOR CH 1/10W 5.1K	1	
R4044		ERJ6GEYJ105	M.RESISTOR CH 1/10W 1M	1	
R4045		ERJ6GEYJ101	M.RESISTOR CH 1/10W 100	1	
R4046,47		VRE0034E510	M.RESISTOR CH 1/10W 51	2	
R4048		VRE0034E103	M.RESISTOR CH 1/10W 10K	1	
R4049		ERJ6GEYJ105	M.RESISTOR CH 1/10W 1M	1	
R4050		ERJ6GEYJ101	M.RESISTOR CH 1/10W 100	1	
R4051		VRE0034E152	M.RESISTOR CH 1/10W 1.5K	1	
R4052		VRE0034E222	M.RESISTOR CH 1/10W 2.2K	1	
R4053-55		VRE0034E472	M.RESISTOR CH 1/10W 4.7K	3	

Ref.No.		Part No.	Part Name & Description	Pcs	Remarks
R4056		VRE0034E103	M.RESISTOR CH 1/10W 10K	1	
R4057		ERJ6GEYJ105	M.RESISTOR CH 1/10W 1M	1	
R4058		ERJ6GEYJ101	M.RESISTOR CH 1/10W 100	1	
R4059,60		VRE0034E510	M.RESISTOR CH 1/10W 51	2	
R4061		ERJ6GEY0R00	M.RESISTOR CH 1/10W 0	1	
R4062		ERJ6GEYJ100	M.RESISTOR CH 1/10W 10	1	
R4072		ERJ12YJ621	M.RESISTOR 1/2W 620	1	
R4074		VRE0034E103	M.RESISTOR CH 1/10W 10K	1	
R4075,76		VRE0034E473	M.RESISTOR CH 1/10W 47K	2	
R4077,78		VRE0034E123	M.RESISTOR CH 1/10W 12K	2	
R4079,80		VRE0034E333	M.RESISTOR CH 1/10W 33K	2	
R4081,82		VRE0034E332	M.RESISTOR CH 1/10W 3.3K	2	
R4083,84		VRE0034E32B	M.RESISTOR CH 1/10W 0.32	2	
R4085,86		ERJ6GEY0R00	M.RESISTOR CH 1/10W 0	2	
R4087-89		VRE0034E472	M.RESISTOR CH 1/10W 4.7K	3	
R4090		VRE0034E470	M.RESISTOR CH 1/10W 47	1	
R4091,92		VRE0034E472	M.RESISTOR CH 1/10W 4.7K	2	
R4093		VRE0034E392	M.RESISTOR CH 1/10W 3.9K	1	
R4094		VRE0034E473	M.RESISTOR CH 1/10W 47K	1	
R4095		VRE0034E102	M.RESISTOR CH 1/10W 1K	1	
R4096		VRE0034E101	M.RESISTOR CH 1/10W 100	1	
R4097,98		ERJ6GEYJ103	M.RESISTOR CH 1/10W 10K	2	
R4099		VRE0034E123	M.RESISTOR CH 1/10W 12K	1	
R4100		VRE0034E222	M.RESISTOR CH 1/10W 2.2K	1	
R4101		VRE0034E102	M.RESISTOR CH 1/10W 1K	1	
R4102		VRE0034E223	M.RESISTOR CH 1/10W 22K	1	
R4103		ERJ6GEYJ105	M.RESISTOR CH 1/10W 1M	1	
R4104		VRE0034E103	M.RESISTOR CH 1/10W 10K	1	
R4105		VRE0034E471	M.RESISTOR CH 1/10W 470	1	
R4106		VRE0034E123	M.RESISTOR CH 1/10W 12K	1	
R4107		VRE0034E152	M.RESISTOR CH 1/10W 1.5K	1	
R4108		VRE0034E222	M.RESISTOR CH 1/10W 2.2K	1	
R4109-11		VRE0034E472	M.RESISTOR CH 1/10W 4.7K	3	
R4112		VRE0034E332	M.RESISTOR CH 1/10W 3.3K	1	
R4113		VRE0034E512	M.RESISTOR CH 1/10W 5.1K	1	
R4114		ERJ6GEYJ105	M.RESISTOR CH 1/10W 1M	1	
R4115		ERJ6GEYJ101	M.RESISTOR CH 1/10W 100	1	
R4116,17		VRE0034E510	M.RESISTOR CH 1/10W 51	2	
R4118		VRE0034E103	M.RESISTOR CH 1/10W 10K	1	
R4119		ERJ6GEYJ105	M.RESISTOR CH 1/10W 1M	1	
R4120		ERJ6GEYJ101	M.RESISTOR CH 1/10W 100	1	
R4121		VRE0034E152	M.RESISTOR CH 1/10W 1.5K	1	
R4122		VRE0034E222	M.RESISTOR CH 1/10W 2.2K	1	
R4123-25		VRE0034E472	M.RESISTOR CH 1/10W 4.7K	3	
R4126		VRE0034E103	M.RESISTOR CH 1/10W 10K	1	
R4127		ERJ6GEYJ105	M.RESISTOR CH 1/10W 1M	1	
R4128		ERJ6GEYJ101	M.RESISTOR CH 1/10W 100	1	
R4129,30		VRE0034E510	M.RESISTOR CH 1/10W 51	2	
R4131		ERJ6GEY0R00	M.RESISTOR CH 1/10W 0	1	
R4132		ERJ6GEYJ100	M.RESISTOR CH 1/10W 10	1	
R4142		ERJ12YJ621	M.RESISTOR 1/2W 620	1	
R4144		VRE0034E103	M.RESISTOR CH 1/10W 10K	1	
R4145,46		VRE0034E473	M.RESISTOR CH 1/10W 47K	2	
R4147,48		VRE0034E123	M.RESISTOR CH 1/10W 12K	2	
R4149,50		VRE0034E333	M.RESISTOR CH 1/10W 33K	2	
R4151,52		VRE0034E332	M.RESISTOR CH 1/10W 3.3K	2	
R4153,54		VRE0034E32B	M.RESISTOR CH 1/10W 0.32	2	
R4155,56		ERJ6GEY0R00	M.RESISTOR CH 1/10W 0	2	
R4157-59		VRE0034E472	M.RESISTOR CH 1/10W 4.7K	3	
R4160		VRE0034E470	M.RESISTOR CH 1/10W 47	1	
R4161,62		VRE0034E472	M.RESISTOR CH 1/10W 4.7K	2	
R4163		VRE0034E392	M.RESISTOR CH 1/10W 3.9K	1	
R4164		VRE0034E473	M.RESISTOR CH 1/10W 47K	1	
R4165		VRE0034E102	M.RESISTOR CH 1/10W 1K	1	
R4166		VRE0034E101	M.RESISTOR CH 1/10W 100	1	
R4167,68		ERJ6GEYJ103	M.RESISTOR CH 1/10W 10K	2	
R4169		VRE0034E123	M.RESISTOR CH 1/10W 12K	1	
R4170		VRE0034E222	M.RESISTOR CH 1/10W 2.2K	1	
R4171		VRE0034E102	M.RESISTOR CH 1/10W 1K	1	
R4172		ERJ6GEYJ105	M.RESISTOR CH 1/10W 1M	1	
R4173		VRE0034E223	M.RESISTOR CH 1/10W 22K	1	
R4174		VRE0034E103	M.RESISTOR CH 1/10W 10K	1	
R4175		VRE0034E471	M.RESISTOR CH 1/10W 470	1	
R4176		VRE0034E123	M.RESISTOR CH 1/10W 12K	1	
R4177		VRE0034E152	M.RESISTOR CH 1/10W 1.5K	1	

Ref.No.		Part No.	Part Name & Description	Pcs	Remarks
R4178		VRE0034E222	M.RESISTOR CH 1/10W 2.2K	1	
R4179-81		VRE0034E472	M.RESISTOR CH 1/10W 4.7K	3	
R4182		VRE0034E332	M.RESISTOR CH 1/10W 3.3K	1	
R4183		VRE0034E512	M.RESISTOR CH 1/10W 5.1K	1	
R4184		ERJ6GEYJ105	M.RESISTOR CH 1/10W 1M	1	
R4185		ERJ6GEYJ101	M.RESISTOR CH 1/10W 100	1	
R4186,87		VRE0034E510	M.RESISTOR CH 1/10W 51	2	
R4188		VRE0034E103	M.RESISTOR CH 1/10W 10K	1	
R4189		ERJ6GEYJ105	M.RESISTOR CH 1/10W 1M	1	
R4190		ERJ6GEYJ101	M.RESISTOR CH 1/10W 100	1	
R4191		VRE0034E152	M.RESISTOR CH 1/10W 1.5K	1	
R4192		VRE0034E222	M.RESISTOR CH 1/10W 2.2K	1	
R4193-95		VRE0034E472	M.RESISTOR CH 1/10W 4.7K	3	
R4196		VRE0034E103	M.RESISTOR CH 1/10W 10K	1	
R4197		ERJ6GEYJ105	M.RESISTOR CH 1/10W 1M	1	
R4198		ERJ6GEYJ101	M.RESISTOR CH 1/10W 100	1	
R4199,00		VRE0034E510	M.RESISTOR CH 1/10W 51	2	
R4201		ERJ6GEY0R00	M.RESISTOR CH 1/10W 0	1	
R4202		ERJ6GEYJ100	M.RESISTOR CH 1/10W 10	1	
R4212		ERJ12YJ621	M.RESISTOR 1/2W 620	1	
R4214		VRE0034E103	M.RESISTOR CH 1/10W 10K	1	
R4215,16		VRE0034E473	M.RESISTOR CH 1/10W 47K	2	
R4217,18		VRE0034E123	M.RESISTOR CH 1/10W 12K	2	
R4219,20		VRE0034E333	M.RESISTOR CH 1/10W 33K	2	
R4221,22		VRE0034E332	M.RESISTOR CH 1/10W 3.3K	2	
R4223,24		VRE0034E32B	M.RESISTOR CH 1/10W 0.32	2	
R4225,26		ERJ6GEY0R00	M.RESISTOR CH 1/10W 0	2	
R4227-29		VRE0034E472	M.RESISTOR CH 1/10W 4.7K	3	
R4230		VRE0034E470	M.RESISTOR CH 1/10W 47	1	
R4231,32		VRE0034E472	M.RESISTOR CH 1/10W 4.7K	2	
R4233		VRE0034E392	M.RESISTOR CH 1/10W 3.9K	1	
R4234		VRE0034E473	M.RESISTOR CH 1/10W 47K	1	
R4235		VRE0034E102	M.RESISTOR CH 1/10W 1K	1	
R4236		VRE0034E101	M.RESISTOR CH 1/10W 100	1	
R4237,38		ERJ6GEYJ103	M.RESISTOR CH 1/10W 10K	2	
R4239		VRE0034E123	M.RESISTOR CH 1/10W 12K	1	
R4240		VRE0034E222	M.RESISTOR CH 1/10W 2.2K	1	
R4241		VRE0034E102	M.RESISTOR CH 1/10W 1K	1	
R4242		VRE0034E223	M.RESISTOR CH 1/10W 22K	1	
R4243		ERJ6GEYJ105	M.RESISTOR CH 1/10W 1M	1	
R4244		VRE0034E103	M.RESISTOR CH 1/10W 10K	1	
R4245		VRE0034E471	M.RESISTOR CH 1/10W 470	1	
R4246		VRE0034E123	M.RESISTOR CH 1/10W 12K	1	
R4247		VRE0034E152	M.RESISTOR CH 1/10W 1.5K	1	
R4248		VRE0034E222	M.RESISTOR CH 1/10W 2.2K	1	
R4249-51		VRE0034E472	M.RESISTOR CH 1/10W 4.7K	3	
R4252		VRE0034E332	M.RESISTOR CH 1/10W 3.3K	1	
R4253		VRE0034E512	M.RESISTOR CH 1/10W 5.1K	1	
R4254		ERJ6GEYJ105	M.RESISTOR CH 1/10W 1M	1	
R4255		ERJ6GEYJ101	M.RESISTOR CH 1/10W 100	1	
R4256,57		VRE0034E510	M.RESISTOR CH 1/10W 51	2	
R4258		VRE0034E103	M.RESISTOR CH 1/10W 10K	1	
R4259		ERJ6GEYJ105	M.RESISTOR CH 1/10W 1M	1	
R4260		ERJ6GEYJ101	M.RESISTOR CH 1/10W 100	1	
R4261		VRE0034E152	M.RESISTOR CH 1/10W 1.5K	1	
R4262		VRE0034E222	M.RESISTOR CH 1/10W 2.2K	1	
R4263-65		VRE0034E472	M.RESISTOR CH 1/10W 4.7K	3	
R4266		VRE0034E103	M.RESISTOR CH 1/10W 10K	1	
R4267		ERJ6GEYJ105	M.RESISTOR CH 1/10W 1M	1	
R4268		ERJ6GEYJ101	M.RESISTOR CH 1/10W 100	1	
R4269,70		VRE0034E510	M.RESISTOR CH 1/10W 51	2	
R4271		ERJ6GEY0R00	M.RESISTOR CH 1/10W 0	1	
R4272		ERJ6GEYJ100	M.RESISTOR CH 1/10W 10	1	
RY4001-04		VSY2039	RELAY	4	
SW4002,03		VJP1990	CONNECTOR	2	
SW4004		VSS0162	SWITCH	1	
SW4008,09		VJP1990	CONNECTOR	2	
SW4010		VSS0162	SWITCH	1	
SW4014,15		VJP1990	CONNECTOR	2	

Ref.No.		Part No.	Part Name & Description	Pcs	Remarks
SW4016		VSS0162	SWITCH	1	
SW4020,21		VJP1990	CONNECTOR	2	
SW4022		VSS0162	SWITCH	1	
SWS4001-04		VJS1990	CONNECTOR	4	
TP4001-12		VJR0646	TEST POINT	12	
TPG4001-04		VJR0646	TEST POINT	4	
VR4001		VRV0109B201	V.RESISTOR 200	1	
VR4002		VRV0109B103	V.RESISTOR 10K	1	
VR4003		VRV0109B201	V.RESISTOR 200	1	
VR4004		VRV0109B103	V.RESISTOR 10K	1	
VR4005		VRV0109B201	V.RESISTOR 200	1	
VR4006		VRV0109B103	V.RESISTOR 10K	1	
VR4007		VRV0109B201	V.RESISTOR 200	1	
VR4008		VRV0109B103	V.RESISTOR 10K	1	
			MISCELLANEOUS		
		VML2143	LEVER. ARM.	1	
		VML2144	LEVER. ARM.	1	
		VXA4420	P.C.BOARD SHIELD PLATE	1	
		XTV3+6FFR	SCREW	5	

S10 VIDEO A/D,D/A VEP88093A

Ref.No.		Part No.	Part Name & Description	Pcs	Remarks
S10	■	VEP88093A	P.C.BOARD W/COMPONENT		
			VIDEO A/D,D/A		
			CAPACITORS		
C8001		ECA1AXNV101C	.CAPACITOR V	1	
C8002,03		ECEV1CV470	E.CAPACITOR 16V 47U	2	
C8004,05		ECUX1C104ZFV	C.CAPACITOR CH 16V 0.1U	2	
C8006,07		ECUX1H103ZFV	C.CAPACITOR CH 50V 0.01U	2	
C8008,09		ECEV1CV470	E.CAPACITOR 16V 47U	2	
C8010		ECEV1HV4R7	.CAPACITOR V	1	
C8011-14		ECEV1CV470	E.CAPACITOR 16V 47U	4	
C8015-23		ECUX1C104ZFV	C.CAPACITOR CH 16V 0.1U	9	
C8024		ECUM1E104KBN	C.CAPACITOR 25V 0.1U	1	
C8025-39		ECUX1C104ZFV	C.CAPACITOR CH 16V 0.1U	15	
C8040		ECUM1E104KBN	C.CAPACITOR 25V 0.1U	1	
C8042		ECUX1C104ZFV	C.CAPACITOR CH 16V 0.1U	1	
C8044,45		ECUX1C104ZFV	C.CAPACITOR CH 16V 0.1U	2	
C8047		ECUX1C104ZFV	C.CAPACITOR CH 16V 0.1U	1	
C8048,49		ECUX1H103ZFV	C.CAPACITOR CH 50V 0.01U	2	
C8050-52		ECEV1CV470	E.CAPACITOR 16V 47U	3	
C8055-57		ECEV1CV470	E.CAPACITOR 16V 47U	3	
C8058-63		ECUX1C104ZFV	C.CAPACITOR CH 16V 0.1U	6	
C8065		ECUX1C104ZFV	C.CAPACITOR CH 16V 0.1U	1	
C8067		ECUX1C104ZFV	C.CAPACITOR CH 16V 0.1U	1	
C8072-79		ECUX1C104ZFV	C.CAPACITOR CH 16V 0.1U	8	
C8081-83		ECUX1C104ZFV	C.CAPACITOR CH 16V 0.1U	3	
C8085		ECUX1H122KBV	C.CAPACITOR CH 50V 1200P	1	
C8086		ECUX1H330JCV	C.CAPACITOR 50V 33P	1	
C8088		ECUX1H470JCV	C.CAPACITOR 50V 47P	1	
C8089		ECUX1H331JCV		1	
C8090		ECUX1C104ZFV	C.CAPACITOR CH 16V 0.1U	1	
C8092		ECUM1E104KBN	C.CAPACITOR 25V 0.1U	1	
C8094,95		ECUX1C104ZFV	C.CAPACITOR CH 16V 0.1U	2	
C8096		ECEV1HN010	E.CAPACITOR 50V 1U	1	
C8097,98		ECEV1CV470	E.CAPACITOR 16V 47U	2	
C8099		ECUX1C104ZFV	C.CAPACITOR CH 16V 0.1U	1	
C8100,01		ECUX1H470JCV	C.CAPACITOR 50V 47P	2	
C8102,03		ECUX1C104ZFV	C.CAPACITOR CH 16V 0.1U	2	
C8104,05		ECUM1E104KBN	C.CAPACITOR 25V 0.1U	2	
C8106		ECUX1H820JCV	C.CAPACITOR CH 50V 82P	1	
C8107		ECUX1H680JCV	C.CAPACITOR 50V 68P	1	
C8108		ECUX1C104ZFV	C.CAPACITOR CH 16V 0.1U	1	
C8109		ECUX1H180JCV	C.CAPACITOR 50V 18P	1	
C8110		ECUX1H472KBV	C.CAPACITOR 50V 4700P	1	
C8111		ECUM1E104KBN	C.CAPACITOR 25V 0.1U	1	
C8112,13		ECUX1C104ZFV	C.CAPACITOR CH 16V 0.1U	2	
C8114		ECUX1H103ZFV	C.CAPACITOR CH 50V 0.01U	1	
C8115,16		ECEV1CV470	E.CAPACITOR 16V 47U	2	
C8117		ECUX1C104ZFV	C.CAPACITOR CH 16V 0.1U	1	
C8118		ECUX1H221JCV	C.CAPACITOR CH 50V 220P	1	
C8119-23		ECUX1C104ZFV	C.CAPACITOR CH 16V 0.1U	5	
C8124		ECUX1H102KBV	C.CAPACITOR 50V 1000P	1	
C8125		ECUX1C104ZFV	C.CAPACITOR CH 16V 0.1U	1	
C8126		ECUM1H223KBN	C.CAPACITOR CH 50V 0.022U	1	
C8127-30		ECUX1C104ZFV	C.CAPACITOR CH 16V 0.1U	4	
C8131,32		ECUX1H103ZFV	C.CAPACITOR CH 50V 0.01U	2	
C8133		ECEV1HN010	E.CAPACITOR 50V 1U	1	
C8134-37		ECEV1CV470	E.CAPACITOR 16V 47U	4	
C8138		ECEV1HV010	E.CAPACITOR 50V 1U	1	
C8139-53		ECUX1C104ZFV	C.CAPACITOR CH 16V 0.1U	15	
C8154		ECUM1E104KBN	C.CAPACITOR 25V 0.1U	1	
C8155-58		ECUX1C104ZFV	C.CAPACITOR CH 16V 0.1U	4	
C8159		ECUX1H561JCV	C.CAPACITOR 50V 560P	1	
C8160		ECUX1H101JCV	C.CAPACITOR CH 50V 100P	1	
C8161-63		ECEV1CV470	E.CAPACITOR 16V 47U	3	
C8164,65		ECUX1C104ZFV	C.CAPACITOR CH 16V 0.1U	2	
C8166		ECUX1H822KBV	C.CAPACITOR CH 50V 8200P	1	
C8167		ECUM1E104KBN	C.CAPACITOR 25V 0.1U	1	
C8168,69		ECUX1C104ZFV	C.CAPACITOR CH 16V 0.1U	2	

Ref.No.		Part No.	Part Name & Description	Pcs	Remarks
C8170		ECUX1H103ZFV	C.CAPACITOR CH 50V 0.01U	1	
C8171		ECUX1C104ZFV	C.CAPACITOR CH 16V 0.1U	1	
C8172		ECEV1CV470	E.CAPACITOR 16V 47U	1	
C8173		ECEV1CV100	E.CAPACITOR 16V 10U	1	
C8174-76		ECEV1CV470	E.CAPACITOR 16V 47U	3	
C8177		ECUX1H470JCV	C.CAPACITOR 50V 47P	1	
C8178		ECUX1C104ZFV	C.CAPACITOR CH 16V 0.1U	1	
C8179		ECUX1H470JCV	C.CAPACITOR 50V 47P	1	
C8180		ECUX1H330JCV	C.CAPACITOR 50V 33P	1	
C8181		ECUX1H102KBV	C.CAPACITOR 50V 1000P	1	
C8182		ECUM1E104KBN	C.CAPACITOR 25V 0.1U	1	
C8183		ECUX1C104ZFV	C.CAPACITOR CH 16V 0.1U	1	
C8184		ECUM1E104KBN	C.CAPACITOR 25V 0.1U	1	
C8185		ECUX1H331JCV		1	
C8186-88		ECUX1C104ZFV	C.CAPACITOR CH 16V 0.1U	3	
C8189		ECUX1H221JCV	C.CAPACITOR CH 50V 220P	1	
C8190		ECUX1H220JCV	C.CAPACITOR CH 50V 22P	1	
C8191-94		ECUX1C104ZFV	C.CAPACITOR CH 16V 0.1U	4	
C8204-08		ECEV1CV470	E.CAPACITOR 16V 47U	5	
C8209		ECUX1C104ZFV	C.CAPACITOR CH 16V 0.1U	1	
C8211		ECUX1C104ZFV	C.CAPACITOR CH 16V 0.1U	1	
C8212		ECUM1E104KBN	C.CAPACITOR 25V 0.1U	1	
C8213-15		ECUX1C104ZFV	C.CAPACITOR CH 16V 0.1U	3	
C8216		ECUM1E104KBN	C.CAPACITOR 25V 0.1U	1	
C8217		ECUX1H182KBV	C.CAPACITOR CH 50V 1800P	1	
C8218,19		ECUX1C104ZFV	C.CAPACITOR CH 16V 0.1U	2	
C8220,21		ECUX1H560JCV	C.CAPACITOR 50V 56P	2	
C8222-50		ECUX1C104ZFV	C.CAPACITOR CH 16V 0.1U	29	
C8251,52		ECEV1CV470	E.CAPACITOR 16V 47U	2	
C8253,54		ECUX1C104ZFV	C.CAPACITOR CH 16V 0.1U	2	
C8255,56		ECUX1H103ZFV	C.CAPACITOR CH 50V 0.01U	2	
C8257-62		ECUX1C104ZFV	C.CAPACITOR CH 16V 0.1U	6	
C8275,76		ECUX1C104ZFV	C.CAPACITOR CH 16V 0.1U	2	
C8277		ECEV1CV470	E.CAPACITOR 16V 47U	1	
C8278-80		ECUX1C104ZFV	C.CAPACITOR CH 16V 0.1U	3	
C8281		ECA1AXNV101C	.CAPACITOR V	1	
C8282		ECEV1HN4R7	.CAPACITOR V	1	
C8283		ECA1HXKN2R2F	E.CAPACITOR 50V 2.2U	1	
C8285,86		ECEV1CV470	E.CAPACITOR 16V 47U	2	
C8287-89		ECUX1C104ZFV	C.CAPACITOR CH 16V 0.1U	3	
C8290		ECUX1H470JCV	C.CAPACITOR 50V 47P	1	
C8291		ECUX1C104ZFV	C.CAPACITOR CH 16V 0.1U	1	
C8292		ECUX1H331JCV		1	
C8293		ECUX1C104ZFV	C.CAPACITOR CH 16V 0.1U	1	
C8294		ECUX1H560JCV	C.CAPACITOR 50V 56P	1	
C8295		ECUX1H020CCV	C.CAPACITOR 50V 2P	1	
C8299		ECUX1C104ZFV	C.CAPACITOR CH 16V 0.1U	1	
C8300		ECUX1H180JCV	C.CAPACITOR 50V 18P	1	
C8301		VCK0037474KR	C.CAPACITOR 50V 0.27U	1	
C8302,03		ECUX1C104ZFV	C.CAPACITOR CH 16V 0.1U	2	
C8304		ECUX1H470JCV	C.CAPACITOR 50V 47P	1	
C8305,06		ECUX1C104ZFV	C.CAPACITOR CH 16V 0.1U	2	
C8307		ECUX1H470JCV	C.CAPACITOR 50V 47P	1	
C8308,09		ECUX1H103ZFV	C.CAPACITOR CH 50V 0.01U	2	
C8310,11		ECEV1CV470	E.CAPACITOR 16V 47U	2	
C8312,13		ECUX1C104ZFV	C.CAPACITOR CH 16V 0.1U	2	
C8316,17		ECUX1C104ZFV	C.CAPACITOR CH 16V 0.1U	2	
C8318,19		ECEV1CV470	E.CAPACITOR 16V 47U	2	
C8320		ECUX1H180JCV	C.CAPACITOR 50V 18P	1	
C8321-26		ECUX1C104ZFV	C.CAPACITOR CH 16V 0.1U	6	
C8327,28		ECEV1CV470	E.CAPACITOR 16V 47U	2	
C8329		ECUX1H180JCV	C.CAPACITOR 50V 18P	1	
C8330,31		ECUX1C104ZFV	C.CAPACITOR CH 16V 0.1U	2	
C8332,33		ECEV1CV470	E.CAPACITOR 16V 47U	2	
C8334		ECUX1H180JCV	C.CAPACITOR 50V 18P	1	
C8335		ECUX1C104ZFV	C.CAPACITOR CH 16V 0.1U	1	
C8336		ECUX1H270JCV	C.CAPACITOR 50V 27P	1	
C8337		ECUX1C104ZFV	C.CAPACITOR CH 16V 0.1U	1	
C8338		ECUX1H151JCV	C.CAPACITOR CH 50V 150P	1	
C8339-42		ECUX1C104ZFV	C.CAPACITOR CH 16V 0.1U	4	
C8343-46		ECEV1CV470	E.CAPACITOR 16V 47U	4	
C8347		ECUX1C104ZFV	C.CAPACITOR CH 16V 0.1U	1	
C8348		ECUX1H180JCV	C.CAPACITOR 50V 18P	1	
C8349-55		ECUX1C104ZFV	C.CAPACITOR CH 16V 0.1U	7	
C8356,57		ECUX1H102KBV	C.CAPACITOR 50V 1000P	2	

Ref.No.		Part No.	Part Name & Description	Pcs	Remarks
C8358-61		ECUX1C104ZFV	C.CAPACITOR CH 16V 0.1U	4	
C8362,63		ECEV1CV470	E.CAPACITOR 16V 47U	2	
C8364,65		ECEV1EV330	E.CAPACITOR 25V 33U	2	
C8366,67		ECUX1C104ZFV	C.CAPACITOR CH 16V 0.1U	2	
C8368,69		ECUX1H103ZFV	C.CAPACITOR CH 50V 0.01U	2	
C8370		ECEV1CV470	E.CAPACITOR 16V 47U	1	
C8371		ECUX1C104ZFV	C.CAPACITOR CH 16V 0.1U	1	
C8372		ECEV1CV470	E.CAPACITOR 16V 47U	1	
C8373-75		ECUX1C104ZFV	C.CAPACITOR CH 16V 0.1U	3	
C8376,77		ECUX1H103ZFV	C.CAPACITOR CH 50V 0.01U	2	
C8378-87		ECUX1C104ZFV	C.CAPACITOR CH 16V 0.1U	10	
C8400-26		ECUX1C104ZFV	C.CAPACITOR CH 16V 0.1U	27	
D8001		MA3160-M	DIODE	1	
D8002		MA3051-M	DIODE	1	
D8003-08		MA335-R	DIODE	6	
D8009-12		MA141K	DIODE	4	
D8014		1SZ53	DIODE	1	
D8016		MA141WK	DIODE	1	
D8017		MA141K	DIODE	1	
D8018		MA335-R	DIODE	1	
D8019,20		MA141K	DIODE	2	
D8022		1SZ53	DIODE	1	
D8023		MA3160-M	DIODE	1	
D8024		MA157	DIODE	1	
D8025-28		MA3160-M	DIODE	4	
D8029		MA141K	DIODE	1	
FL8001		VLF0901	FILTER	1	
FL8002		ELB4Y014	FILTER	1	#FL
FL8003-07		VLF0576	FILTER	5	
FL8008		VLF0931	COIL	1	
IC8001		AN79N12	IC	1	
IC8002		AN78N12	IC	1	
IC8003		NJM78L05UA	IC	1	
IC8004		NJM79L05UA	IC	1	
IC8005		DAC10-GS	IC	1	
IC8007		EL2082CS	IC	1	#IC
IC8008		NJM79L12UA	IC	1	
IC8009		NJM78L12UA	IC	1	
IC8010		NJM084M	IC	1	
IC8014		NJM082BM	IC	1	
IC8015		NJM78L05UA	IC	1	
IC8018,19		CXD1175AM		2	
IC8020		EL2044CS	IC	1	
IC8021		NJM4560MD	IC	1	
IC8023		NJM2060M	IC	1	
IC8027		NJM084M	IC	1	
IC8031		AN91A12S	IC	1	
IC8032		AN78N09	IC	1	
IC8033		MM74HC221AMX	IC	1	
IC8035		MC74HC00AF	IC	1	
IC8036		UPC624C	IC	1	
IC8037		NJM79L09UA	IC	1	
IC8038		NJM78L09UA	IC	1	
IC8039		NJM319M	IC	1	
IC8041		NJM082BM	IC	1	
IC8043		NJM78L05UA	IC	1	
IC8044		CXD1175AM		1	
IC8045		NJM79L05UA	IC	1	
IC8046		MC74HC74AF	IC	1	
IC8047		MC74HC574AF	IC	1	
IC8048		MC74HC4053F	IC	1	
IC8050		NJM319M	IC	1	
IC8052		NJM084M	IC	1	
IC8056		NJM082BM	IC	1	
IC8058		UPD42102G-3	IC	1	
IC8059		L7A0756	IC	1	

Ref.No.		Part No.	Part Name & Description	Pcs	Remarks
IC8062		SN74LS221NS	IC	1	
IC8064		NJM78L05UA	IC	1	
IC8065		NJM79L05UA	IC	1	
IC8066		NJM78L09UA	IC	1	
IC8068		74F00SJ	IC	1	
IC8069		NJM082BM	IC	1	
IC8071		NJM78L05UA	IC	1	
IC8072		MM74HC221AMX	IC	1	
IC8074		74AC00SJ	IC	1	
IC8078		NJM084M	IC	1	
IC8083,84		NJM78L05UA	IC	2	
IC8085		MB40778PF		1	
IC8086,87		MC74HC163AF	IC	2	
IC8088		MC74HC00AF	IC	1	
IC8091		74F86SJ	IC	1	
IC8094		NJM360M	IC	1	
IC8095		NJM082BM	IC	1	
IC8097		MC74HC32AF	IC	1	
IC8106,07		SN74AS253NS	IC	2	
IC8108		SN74AS244NS	IC	1	
IC8109		MC10H125M	IC	1	
IC8111		MC10H125M	IC	1	
IC8113		MC10H125M	IC	1	
IC8116		SN74LS541NS	IC	1	
IC8117		SN74LS244NS	IC	1	
IC8119-21		MC10H124M	IC	3	
IC8125,26		UPD71055GB	IC	2	
IC8127		TC7SU04F	IC	1	
IC8128,29		SN74S1051NS	IC	2	
IC8134		MC74HC27F	IC	1	
IC8137		MC74HC138AF	IC	1	
IC8138		MC74HC00AF	IC	1	
IC8142-44		SN74ALS541NS	IC	3	
IC8145		SN74ALS245AS	IC	1	
IC8146		AN79N12	IC	1	
IC8147		AN78N12	IC	1	
IC8148,49		MC10H125M	IC	2	
IC8151		MC10H125M	IC	1	
IC8154		AN79N05	IC	1	
IC8155		TDC1112R3C1	IC	1	
IC8156		TMC2242R2C1	IC	1	
IC8157		74F821SCX	IC	1	#IC
IC8158		AN79N12	IC	1	
IC8159		AN78N12	IC	1	
IC8160		MM74HC221AMX	IC	1	
IC8162		EL2044CS	IC	1	
IC8163		NJM084M	IC	1	
IC8167		EL2044CS	IC	1	
IC8168,69		AD9300KP	IC	2	
IC8171		NJM78L05UA	IC	1	
IC8172		NJM79L05UA	IC	1	
IC8173		MC74HC4052F	IC	1	
IC8174		NJM082BM	IC	1	
IC8175-77		MC10H124M	IC	3	
IC8178		EL2044CS	IC	1	
L8001-04		VLQ0163J220	COIL 22UH	4	
L8005		VLQ0133K821	COIL 820UH	1	
L8006,07		VLQ0163J220	COIL 22UH	2	
L8008		VLQ0133K221	COIL H	1	#L
L8009		VLQ0163J220	COIL 22UH	1	
L8010		VLP0017	COIL	1	
L8011,12		VLQ0163J220	COIL 22UH	2	
L8014		VLQ0319K101	COIL 100UH	1	
L8015		VLQ0163J220	COIL 22UH	1	
L8017		VLQ0133K821	COIL 820UH	1	
L8018-23		VLQ0163J220	COIL 22UH	6	
L8024		VLQ0319K680	COIL 68UH	1	
L8025-28		VLQ0163J220	COIL 22UH	4	
L8029,30		VLP0017	COIL	2	

Ref.No.		Part No.	Part Name & Description	Pcs	Remarks
P8001		VJP1230T	CONNECTOR (MALE) 3P	1	
P8019,20		VJP3454B096	CONNECTOR (MALE)	2	
Q8001,02		2SB709-R	TRANSISTOR CHIP	2	(R)
Q8003,04		2SD1991A	TRANSISTOR	2	
Q8005		2SB709-R	TRANSISTOR CHIP	1	(R)
Q8006		2SD601-R	TRANSISTOR CHIP	1	(R)
Q8007		2SB642	TRANSISTOR	1	
Q8008		2SB1322A-QR	TRANSISTOR	1	
Q8009		2SK198	TRANSISTOR CHIP	1	(Q,R,S)
Q8010-12		2SB709-R	TRANSISTOR CHIP	3	(R)
Q8013		2SB1218A	TRANSISTOR	1	
Q8014,15		2SC3930		2	
Q8016		2SD1819A	TRANSISTOR	1	
Q8017		2SK662	TRANSISTOR	1	
Q8022		2SB1322A-QR	TRANSISTOR	1	
Q8026		2SD601-R	TRANSISTOR CHIP	1	(R)
Q8027		2SK198	TRANSISTOR CHIP	1	(Q,R,S)
Q8028		2SD601-R	TRANSISTOR CHIP	1	(R)
Q8029		2SB709-R	TRANSISTOR CHIP	1	(R)
Q8030,31		2SC2188	TRANSISTOR	2	
Q8032		2SB709-R	TRANSISTOR CHIP	1	(R)
Q8033,34		2SC2188	TRANSISTOR	2	
Q8035		2SB709-R	TRANSISTOR CHIP	1	(R)
Q8036,37		2SC2188	TRANSISTOR	2	
Q8038		2SB709-R	TRANSISTOR CHIP	1	(R)
Q8039		2SD1991A	TRANSISTOR	1	
Q8040,41		2SC2188	TRANSISTOR	2	
			RESISTORS		
R8001,02		VRE0034E221	M.RESISTOR CH 1/10W 220	2	
R8003		VRE0034E392	M.RESISTOR CH 1/10W 3.9K	1	
R8004-07		VRE0034E362	M.RESISTOR CH 1/10W 3.6K	4	
R8008		VRE0034E103	M.RESISTOR CH 1/10W 10K	1	
R8009		VRE0034E101	M.RESISTOR CH 1/10W 100	1	
R8010		VRE0034E182	M.RESISTOR CH 1/10W 1.8K	1	
R8011		ERJ6GEYJ821	M.RESISTOR CH 1/10W 820	1	
R8012		ERJ6GEYJ681	M.RESISTOR CH 1/10W 680	1	
R8013		VRE0034E163	M.RESISTOR CH 1/10W 16K	1	
R8014		VRE0034E302	M.RESISTOR CH 1/10W 3K	1	
R8015		VRE0034E561	M.RESISTOR CH 1/10W 560	1	
R8016,17		ERJ6GEYJ822	M.RESISTOR CH 1/10W 8.2K	2	
R8018		VRE0034E911	M.RESISTOR CH 1/10W 910	1	
R8019		VRE0034E103	M.RESISTOR CH 1/10W 10K	1	
R8020		VRE0034E101	M.RESISTOR CH 1/10W 100	1	
R8021-23		VRE0034E103	M.RESISTOR CH 1/10W 10K	3	
R8024		ERJ6GEYJ183	M.RESISTOR CH 1/10W 18K	1	
R8025		ERJ6GEYJ821	M.RESISTOR CH 1/10W 820	1	
R8026		ERJ6GEYJ681	M.RESISTOR CH 1/10W 680	1	
R8027		VRE0034E362	M.RESISTOR CH 1/10W 3.6K	1	
R8028		ERJ6GEY0R00	M.RESISTOR CH 1/10W 0	1	
R8029		VRE0034E822	M.RESISTOR CH 1/10W 8.2K	1	
R8032		VRE0034E471	M.RESISTOR CH 1/10W 470	1	
R8033		VRE0034E332	M.RESISTOR CH 1/10W 3.3K	1	
R8034		ERJ6GEY0R00	M.RESISTOR CH 1/10W 0	1	
R8035		VRE0034E750	M.RESISTOR CH 1/10W 75	1	
R8037		VRE0034E750	M.RESISTOR CH 1/10W 75	1	
R8038,39		ERJ6GEYJ471	M.RESISTOR CH 1/10W 470	2	
R8040,41		VRE0034E361	M.RESISTOR CH 1/10W 360	2	
R8044		ERJ6GEY0R00	M.RESISTOR CH 1/10W 0	1	
R8045		VRE0034E332	M.RESISTOR CH 1/10W 3.3K	1	
R8046,47		VRE0034E911	M.RESISTOR CH 1/10W 910	2	
R8048		VRE0034E561	M.RESISTOR CH 1/10W 560	1	
R8051		VRE0034E820	M.RESISTOR CH 1/10W 82	1	
R8053		VRE0034E113	M.RESISTOR CH 1/10W 11K	1	
R8054		VRE0034E752	M.RESISTOR CH 1/10W 7.5K	1	
R8055		VRE0034E100	M.RESISTOR CH 1/10W 10	1	
R8056		VRE0034E561	M.RESISTOR CH 1/10W 560	1	
R8058		VRE0034E103	M.RESISTOR CH 1/10W 10K	1	
R8059		VRE0034E162	M.RESISTOR CH 1/10W 1.6K	1	
R8061		VRE0034E104	M.RESISTOR CH 1/10W 100K	1	

Ref.No.		Part No.	Part Name & Description	Pcs	Remarks
R8062		VRE0034E152	M.RESISTOR CH 1/10W 1.5K	1	
R8063,64		VRE0034E100	M.RESISTOR CH 1/10W 10	2	
R8065		VRE0034E393	M.RESISTOR CH 1/10W 39K	1	
R8067		VRE0034E561	M.RESISTOR CH 1/10W 560	1	
R8070		VRE0034E102	M.RESISTOR CH 1/10W 1K	1	
R8071		VRE0034E222	M.RESISTOR CH 1/10W 2.2K	1	
R8074		VRE0034E103	M.RESISTOR CH 1/10W 10K	1	
R8075		ERJ6GEYJ105	M.RESISTOR CH 1/10W 1M	1	
R8076		VRE0034E101	M.RESISTOR CH 1/10W 100	1	
R8077		ERJ6GEYJ105	M.RESISTOR CH 1/10W 1M	1	
R8078		VRE0034E153	M.RESISTOR CH 1/10W 15K	1	
R8079		ERJ6GEYJ123	M.RESISTOR CH 1/10W 12K	1	
R8080		VRE0034E101	M.RESISTOR CH 1/10W 100	1	
R8081		VRE0034E202	M.RESISTOR CH 1/10W 2K	1	
R8082		VRE0034E153	M.RESISTOR CH 1/10W 15K	1	
R8083		ERJ6GEYJ333	M.RESISTOR CH 1/10W 33K	1	
R8084		VRE0034E222	M.RESISTOR CH 1/10W 2.2K	1	
R8085		VRE0034E332	M.RESISTOR CH 1/10W 3.3K	1	
R8086		ERJ6GEYJ822	M.RESISTOR CH 1/10W 8.2K	1	
R8087		VRE0034E101	M.RESISTOR CH 1/10W 100	1	
R8088		VRE0034E222	M.RESISTOR CH 1/10W 2.2K	1	
R8089		ERJ6GEYJ822	M.RESISTOR CH 1/10W 8.2K	1	
R8090		VRE0034E103	M.RESISTOR CH 1/10W 10K	1	
R8091		ERJ6GEYJ684	M.RESISTOR CH 1/10W 680K	1	
R8092		VRE0034E222	M.RESISTOR CH 1/10W 2.2K	1	
R8093		VRE0034E221	M.RESISTOR CH 1/10W 220	1	
R8095		VRE0034E221	M.RESISTOR CH 1/10W 220	1	
R8096		ERJ6GEYJ681	M.RESISTOR CH 1/10W 680	1	
R8097,98		VRE0034E101	M.RESISTOR CH 1/10W 100	2	
R8099		ERJ6GEYJ123	M.RESISTOR CH 1/10W 12K	1	
R8100		VRE0034E472	M.RESISTOR CH 1/10W 4.7K	1	
R8101		VRE0034E101	M.RESISTOR CH 1/10W 100	1	
R8102		VRE0034E222	M.RESISTOR CH 1/10W 2.2K	1	
R8103		VRE0034E562	M.RESISTOR CH 1/10W 5.6K	1	
R8104		VRE0034E272	M.RESISTOR CH 1/10W 2.7K	1	
R8105		ERJ6GEYJ562	M.RESISTOR CH 1/10W 5.6K	1	
R8106		VRE0034E103	M.RESISTOR CH 1/10W 10K	1	
R8107		ERJ6GEYJ333	M.RESISTOR CH 1/10W 33K	1	
R8108		VRE0034E103	M.RESISTOR CH 1/10W 10K	1	
R8109		VRE0034E222	M.RESISTOR CH 1/10W 2.2K	1	
R8110		ERJ6GEYJ183	M.RESISTOR CH 1/10W 18K	1	
R8111,12		ERJ6GEYJ471	M.RESISTOR CH 1/10W 470	2	
R8113		ERJ6GEYJ620	.RESISTOR W	1	
R8114		VRE0034E153	M.RESISTOR CH 1/10W 15K	1	
R8115		VRE0034E103	M.RESISTOR CH 1/10W 10K	1	
R8116		VRE0034E101	M.RESISTOR CH 1/10W 100	1	
R8117		VRE0034E222	M.RESISTOR CH 1/10W 2.2K	1	
R8118		VRE0034E122	M.RESISTOR CH 1/10W 1.2K	1	
R8119		VRE0034E563	M.RESISTOR CH 1/10W 56K	1	
R8120		ERJ6GEYJ105	M.RESISTOR CH 1/10W 1M	1	
R8121		VRE0034E472	M.RESISTOR CH 1/10W 4.7K	1	
R8122		ERJ6GEYJ105	M.RESISTOR CH 1/10W 1M	1	
R8123,24		VRE0034E103	M.RESISTOR CH 1/10W 10K	2	
R8125		VRE0034E104	M.RESISTOR CH 1/10W 100K	1	
R8126,27		VRE0034E332	M.RESISTOR CH 1/10W 3.3K	2	
R8128		ERJ6GEYJ471	M.RESISTOR CH 1/10W 470	1	
R8129-36		ERJ6GEY0R00	M.RESISTOR CH 1/10W 0	8	
R8137,38		ERJ6GEYJ471	M.RESISTOR CH 1/10W 470	2	
R8139		VRE0034E103	M.RESISTOR CH 1/10W 10K	1	
R8140		VRE0034E332	M.RESISTOR CH 1/10W 3.3K	1	
R8141		ERJ6GEYJ471	M.RESISTOR CH 1/10W 470	1	
R8142		VRE0034E102	M.RESISTOR CH 1/10W 1K	1	
R8143		ERJ6GEY0R00	M.RESISTOR CH 1/10W 0	1	
R8144		VRE0034E332	M.RESISTOR CH 1/10W 3.3K	1	
R8145		VRE0034E103	M.RESISTOR CH 1/10W 10K	1	
R8146		ERJ6GEYJ105	M.RESISTOR CH 1/10W 1M	1	
R8147		ERJ6GEYJ682	M.RESISTOR CH 1/10W 6.8K	1	
R8148		VRE0034E113	M.RESISTOR CH 1/10W 11K	1	
R8149,50		VRE0034E103	M.RESISTOR CH 1/10W 10K	2	
R8151,52		VRE0034E222	M.RESISTOR CH 1/10W 2.2K	2	
R8153		VRE0034E101	M.RESISTOR CH 1/10W 100	1	
R8154,55		ERJ6GEYJ473	M.RESISTOR CH 1/10W 47K	2	
R8156		ERJ6GEY0R00	M.RESISTOR CH 1/10W 0	1	
R8157		VRE0034E103	M.RESISTOR CH 1/10W 10K	1	
R8158,59		VRE0034E104	M.RESISTOR CH 1/10W 100K	2	

Ref.No.	Part No.	Part Name & Description	Pcs	Remarks
R8160	ERJ6GEYJ105	M.RESISTOR CH 1/10W 1M	1	
R8161,62	VRE0034E104	M.RESISTOR CH 1/10W 100K	2	
R8163	VRE0034E332	M.RESISTOR CH 1/10W 3.3K	1	
R8164	VRE0034E683	M.RESISTOR CH 1/10W 68K	1	
R8165	VRE0034E102	M.RESISTOR CH 1/10W 1K	1	
R8166	VRE0034E332	M.RESISTOR CH 1/10W 3.3K	1	
R8167	VRE0034E102	M.RESISTOR CH 1/10W 1K	1	
R8168,69	VRE0034E472	M.RESISTOR CH 1/10W 4.7K	2	
R8170,71	VRE0034E103	M.RESISTOR CH 1/10W 10K	2	
R8172	VRE0034E472	M.RESISTOR CH 1/10W 4.7K	1	
R8173	VRE0034E561	M.RESISTOR CH 1/10W 560	1	
R8174	VRE0034E472	M.RESISTOR CH 1/10W 4.7K	1	
R8184	ERJ6GEYJ105	M.RESISTOR CH 1/10W 1M	1	
R8185	VRE0034E223	M.RESISTOR CH 1/10W 22K	1	
R8186	VRE0034E102	M.RESISTOR CH 1/10W 1K	1	
R8187	VRE0034E104	M.RESISTOR CH 1/10W 100K	1	
R8188	ERJ6GEYJ105	M.RESISTOR CH 1/10W 1M	1	
R8189	VRE0034E223	M.RESISTOR CH 1/10W 22K	1	
R8190	ERJ6GEYJ273	M.RESISTOR CH 1/10W 27K	1	
R8191	ERJ6GEYJ123	M.RESISTOR CH 1/10W 12K	1	
R8192	VRE0034E122	M.RESISTOR CH 1/10W 1.2K	1	
R8193	VRE0034E102	M.RESISTOR CH 1/10W 1K	1	
R8195,96	VRE0034E102	M.RESISTOR CH 1/10W 1K	2	
R8197	VRE0034E392	M.RESISTOR CH 1/10W 3.9K	1	
R8204-09	ERJ6GEY0R00	M.RESISTOR CH 1/10W 0	6	
R8210	ERJ6GEYJ471	M.RESISTOR CH 1/10W 470	1	
R8212-33	VRE0034E510	M.RESISTOR CH 1/10W 51	22	
R8245-64	ERJ6GEYJ471	M.RESISTOR CH 1/10W 470	20	
R8265-68	VRE0034E101	M.RESISTOR CH 1/10W 100	4	
R8269-71	ERJ6GEYJ471	M.RESISTOR CH 1/10W 470	3	
R8296	VRE0034E471	M.RESISTOR CH 1/10W 470	1	
R8297,98	ERJ6GEYJ471	M.RESISTOR CH 1/10W 470	2	
R8300	VRE0034E822	M.RESISTOR CH 1/10W 8.2K	1	
R8301	VRE0034E122	M.RESISTOR CH 1/10W 1.2K	1	
R8305	VRE0034E222	M.RESISTOR CH 1/10W 2.2K	1	
R8306	VRE0034E561	M.RESISTOR CH 1/10W 560	1	
R8307	VRE0034E124	.RESISTOR W	1	#R
R8308,09	VRE0034E100	M.RESISTOR CH 1/10W 10	2	
R8310	VRE0034E361	M.RESISTOR CH 1/10W 360	1	
R8311	VRE0034E271	M.RESISTOR CH 1/10W 270	1	
R8313	VRE0034E563	M.RESISTOR CH 1/10W 56K	1	
R8314	ERJ6GEYJ105	M.RESISTOR CH 1/10W 1M	1	
R8315,16	VRE0034E103	M.RESISTOR CH 1/10W 10K	2	
R8318	ERJ6GEYJ105	M.RESISTOR CH 1/10W 1M	1	
R8319	VRE0034E181	M.RESISTOR CH 1/10W 180	1	
R8320	VRE0034E222	M.RESISTOR CH 1/10W 2.2K	1	
R8321-23	VRE0034E101	M.RESISTOR CH 1/10W 100	3	
R8324	VRE0034E471	M.RESISTOR CH 1/10W 470	1	
R8326	VRE0034E471	M.RESISTOR CH 1/10W 470	1	
R8327	VRE0034E221	M.RESISTOR CH 1/10W 220	1	
R8328	VRE0034E102	M.RESISTOR CH 1/10W 1K	1	
R8329	VRE0034E221	M.RESISTOR CH 1/10W 220	1	
R8330	VRE0034E102	M.RESISTOR CH 1/10W 1K	1	
R8331	VRE0034E223	M.RESISTOR CH 1/10W 22K	1	
R8332	VRE0034E222	M.RESISTOR CH 1/10W 2.2K	1	
R8333	VRE0034E103	M.RESISTOR CH 1/10W 10K	1	
R8334,35	VRE0034E472	M.RESISTOR CH 1/10W 4.7K	2	
R8336	VRE0034E333	M.RESISTOR CH 1/10W 33K	1	
R8337	VRE0034E102	M.RESISTOR CH 1/10W 1K	1	
R8341	ERJ6GEYJ471	M.RESISTOR CH 1/10W 470	1	
R8342	VRE0034E561	M.RESISTOR CH 1/10W 560	1	
R8343	VRE0034E222	M.RESISTOR CH 1/10W 2.2K	1	
R8346	VRE0034E750	M.RESISTOR CH 1/10W 75	1	
R8347	VRE0034E272	M.RESISTOR CH 1/10W 2.7K	1	
R8348,49	VRE0034E221	M.RESISTOR CH 1/10W 220	2	
R8350	VRE0034E392	M.RESISTOR CH 1/10W 3.9K	1	
R8352	VRE0034E222	M.RESISTOR CH 1/10W 2.2K	1	
R8353	VRE0034E223	M.RESISTOR CH 1/10W 22K	1	
R8354	VRE0034E221	M.RESISTOR CH 1/10W 220	1	
R8355	VRE0034E100	M.RESISTOR CH 1/10W 10	1	
R8356	VRE0034E750	M.RESISTOR CH 1/10W 75	1	
R8357	VRE0034E272	M.RESISTOR CH 1/10W 2.7K	1	
R8358,59	VRE0034E221	M.RESISTOR CH 1/10W 220	2	
R8360	VRE0034E392	M.RESISTOR CH 1/10W 3.9K	1	
R8362	VRE0034E222	M.RESISTOR CH 1/10W 2.2K	1	

Ref.No.	Part No.	Part Name & Description	Pcs	Remarks
R8363	VRE0034E223	M.RESISTOR CH 1/10W 22K	1	
R8364	VRE0034E221	M.RESISTOR CH 1/10W 220	1	
R8365	VRE0034E750	M.RESISTOR CH 1/10W 75	1	
R8366	VRE0034E272	M.RESISTOR CH 1/10W 2.7K	1	
R8367,68	VRE0034E221	M.RESISTOR CH 1/10W 220	2	
R8369	VRE0034E392	M.RESISTOR CH 1/10W 3.9K	1	
R8371	VRE0034E222	M.RESISTOR CH 1/10W 2.2K	1	
R8372	VRE0034E223	M.RESISTOR CH 1/10W 22K	1	
R8373	VRE0034E221	M.RESISTOR CH 1/10W 220	1	
R8374	VRE0034E102	M.RESISTOR CH 1/10W 1K	1	
R8375	VRE0034E100	M.RESISTOR CH 1/10W 10	1	
R8376	VRE0034E750	M.RESISTOR CH 1/10W 75	1	
R8377	VRE0034E153	M.RESISTOR CH 1/10W 15K	1	
R8378	VRE0034E750	M.RESISTOR CH 1/10W 75	1	
R8379	VRE0034E272	M.RESISTOR CH 1/10W 2.7K	1	
R8380,81	VRE0034E221	M.RESISTOR CH 1/10W 220	2	
R8382	VRE0034E392	M.RESISTOR CH 1/10W 3.9K	1	
R8384	VRE0034E222	M.RESISTOR CH 1/10W 2.2K	1	
R8385	VRE0034E223	M.RESISTOR CH 1/10W 22K	1	
R8386	VRE0034E221	M.RESISTOR CH 1/10W 220	1	
R8387,88	VRE0034E392	M.RESISTOR CH 1/10W 3.9K	2	
R8389,90	VRE0034E102	M.RESISTOR CH 1/10W 1K	2	
R8391	ERJ6GEY0R00	M.RESISTOR CH 1/10W 0	1	
R8399,00	ERJ6GEY0R00	M.RESISTOR CH 1/10W 0	2	
R8403	VRE0034E332	M.RESISTOR CH 1/10W 3.3K	1	
R8404-19	ERJ6GEY0R00	M.RESISTOR CH 1/10W 0	16	
R8422-24	ERJ6GEY0R00	M.RESISTOR CH 1/10W 0	3	
R8426-45	ERJ6GEYJ330	M.RESISTOR CH 1/10W 33	20	
R8446-48	VRE0034E332	M.RESISTOR CH 1/10W 3.3K	3	
R8450-60	VRE0034E470	M.RESISTOR CH 1/10W 47	11	
R8461,62	VRE0034E152	M.RESISTOR CH 1/10W 1.5K	2	
R8463,64	VRE0034E240	.RESISTOR W	2	#R
R8465-84	ERJ6GEY0R00	M.RESISTOR CH 1/10W 0	20	
R8485-97	VRE0034E471	M.RESISTOR CH 1/10W 470	13	
R8994	VRE0034E104	M.RESISTOR CH 1/10W 100K	1	
RY8001	VSY2039	RELAY	1	
TH8002	ERTD2FFL102S	THERMISTOR 1K	1	
TP8001,02	VJR0646	TEST POINT	2	
TP8006,07	VJR0646	TEST POINT	2	
TP8009	VJR0646	TEST POINT	1	
TP8016-18	VJR0646	TEST POINT	3	
TP8033	VJR0646	TEST POINT	1	
TPG8001-03	VJR0646	TEST POINT	3	
VL8001	VLQ0303	COIL	1	
VR8001	VRV0064B102	V.RESISTOR 1K	1	
VR8002	VRV0064B203	V.RESISTOR 20K	1	
VR8003	VRV0112B101	V.RESISTOR W	1	
VR8004	VRV0064B102	V.RESISTOR 1K	1	
VR8005	VRV0113B103	T.RESISTOR 10K	1	
VR8006	VRV0064B201	V.RESISTOR 200	1	
VR8007	VRV0113B202	T.RESISTOR 2K	1	
VR8008	VRV0113B502	T.RESISTOR 5K	1	
VR8011	VRV0113B103	T.RESISTOR 10K	1	
VR8012	VRV0064B102	V.RESISTOR 1K	1	
VR8013	VRV0113B102	V.RESISTOR 1K	1	
VR8014	VRV0113B502	T.RESISTOR 5K	1	
VR8015	VRV0113B202	T.RESISTOR 2K	1	
VR8016	VRV0113B102	V.RESISTOR 1K	1	

Ref.No.		Part No.	Part Name & Description	Pcs	Remarks
X8001		VSX0554	CRYSTAL OSCILLATOR	1	#X
X8002		VSX0545	CRYSTAL OSCILLATOR	1	#X
			MISCELLANEOUS		
		VML2143	LEVER. ARM.	1	
		VML2144	LEVER. ARM.	1	
		VXA4420	P.C.BOARD SHIELD PLATE	1	
		XTV3+6FFR	SCREW	5	

MAIN MOTHER VEP80786A
SUB MOTHER VEP80787A

Ref.No.		Part No.	Part Name & Description	Pcs	Remarks
	■	VEP80786A	P.C.BOARD W/COMPONENT		
			MAIN MOTHER		
	■	VEP80787A	P.C.BOARD W/COMPONENT		FOR VEP80786A
			SUB MOTHER		
P001,02		VJS2899A096	CONNECTOR (FEMALE)	2	
P005-10		VJS2899A096	CONNECTOR (FEMALE)	6	
P015-20		VJS2899A096	CONNECTOR (FEMALE)	6	
P021,22		VJS3454B096	CONNECTOR	2	
P023		VJP3375A080	CONNECTOR	1	
P024		VJP1246T	CONNECTOR (MALE) 6P	1	
P025,26		VJP1243T	CONNECTOR (MALE) 3P	2	
P027,28		VJP1246T	CONNECTOR (MALE) 6P	2	
P029		VJP1232T	CONNECTOR (MALE) 5P	1	
P030		VJP1248T	CONNECTOR (MALE) 8P	1	
P031		VJP1243T	CONNECTOR (MALE) 3P	1	
P033		VJP3094	CONNECTOR	1	
P034		VJP3093	CONNECTOR	1	
P036,37		VJS3423B025	CONNECTOR	2	
P041		VJP1246T	CONNECTOR (MALE) 6P	1	
P042		VJP1243T	CONNECTOR (MALE) 3P	1	
P043		VJP3418A040	CONNECTOR	1	
P044		VJP2741A014	CONNECTOR	1	
P045		VJP3440A006	CONNECTOR	1	
P046		VJP3440A022	CONNECTOR	1	
P047		VJP3440A016	CONNECTOR	1	
P049		VJP2824A006	CONNECTOR	1	
P050		VJP2824A009	CONNECTOR	1	
P051,52		VJP1230T	CONNECTOR (MALE) 3P	2	
			MISCELLANEOUS		
		VMX2233	SPACER	1	
		VMP3973	P.C.BOARD HOLDER ANGLE	1	
		VMP3974	P.C.BOARD HOLDER ANGLE	1	
		VMP3975	P.C.BOARD HOLDER ANGLE	1	
		SHR8006	POST	3	
		XTV26+6FFZ	SCREW	34	
		XNG26BFZ	NUT	4	
		XYN26+C8FZ	SCREW	4	
	■	VEP85037A	P.C.BOARD W/COMPONENT		
			REC AMP		
			CAPACITORS		
C1-C9		ECA1HXS100	E.CAPACITOR 50V 10U	9	
C10-12		ECA1HXS100	E.CAPACITOR 50V 10U	3	
C15		ECA1EXS330	E.CAPACITOR 25V 33U	1	
C16		ECA1HXLV101G	.CAPACITOR V	1	
C20-27		ECUX1C104ZFV	C.CAPACITOR CH 16V 0.1U	8	
C28-31		ECUX1H221JCV	C.CAPACITOR CH 50V 220P	4	
C32		ECUX1C104ZFV	C.CAPACITOR CH 16V 0.1U	1	
C36		ECUX1C104ZFV	C.CAPACITOR CH 16V 0.1U	1	
C38		ECUX1C104ZFV	C.CAPACITOR CH 16V 0.1U	1	
C40-58		ECUX1C104ZFV	C.CAPACITOR CH 16V 0.1U	19	
C60,61		ECUX1C104ZFV	C.CAPACITOR CH 16V 0.1U	2	
C64,65		ECUX1C104ZFV	C.CAPACITOR CH 16V 0.1U	2	
C68,69		ECUX1C104ZFV	C.CAPACITOR CH 16V 0.1U	2	

REC AMP VEP85037A

Ref.No.		Part No.	Part Name & Description	Pcs	Remarks
C72		ECUX1C104ZFV	C.CAPACITOR CH 16V 0.1U	1	
C74,75		ECUX1C104ZFV	C.CAPACITOR CH 16V 0.1U	2	
C90,91		ECA1HXS100	E.CAPACITOR 50V 10U	2	
C100-04		ECUX1C104ZFV	C.CAPACITOR CH 16V 0.1U	5	
C105-08		ECUX1H103KBV	C.CAPACITOR CH 50V 0.01U	4	
C109-14		ECUX1C104ZFV	C.CAPACITOR CH 16V 0.1U	6	
C115,16		ECUX1H101JCV	C.CAPACITOR CH 50V 100P	2	
C117-21		ECUX1C104ZFV	C.CAPACITOR CH 16V 0.1U	5	
C122,23		ECUX1H101JCV	C.CAPACITOR CH 50V 100P	2	
C124-27		ECUX1C104ZFV	C.CAPACITOR CH 16V 0.1U	4	
C128-31		ECUX1H102KBV	C.CAPACITOR 50V 1000P	4	
C132,33		ECUX1H100DCV	C.CAPACITOR 50V 10P	2	
C134,35		ECUX1H050CCV	C.CAPACITOR CH 50V 5P	2	
C200		ECUX1H050CCV	C.CAPACITOR CH 50V 5P	1	
C201-05		ECUX1C104ZFV	C.CAPACITOR CH 16V 0.1U	5	
C208		ECUX1H050CCV	C.CAPACITOR CH 50V 5P	1	
C209		ECUX1C104ZFV	C.CAPACITOR CH 16V 0.1U	1	
C220-23		ECUX1C104ZFV	C.CAPACITOR CH 16V 0.1U	4	
C232		ECUX1C104ZFV	C.CAPACITOR CH 16V 0.1U	1	
C250		ECUX1H562KBV	C.CAPACITOR 50V 5600P	1	
C251		ECUX1H102KBV	C.CAPACITOR 50V 1000P	1	
C252-58		ECUX1C104ZFV	C.CAPACITOR CH 16V 0.1U	7	
C300,01		ECUX1H050CCV	C.CAPACITOR CH 50V 5P	2	
C304,05		ECUX1C104ZFV	C.CAPACITOR CH 16V 0.1U	2	
C308,09		ECUX1C104ZFV	C.CAPACITOR CH 16V 0.1U	2	
C312,13		ECUX1H221JCV	C.CAPACITOR CH 50V 220P	2	
C316,17		ECUX1H101JCV	C.CAPACITOR CH 50V 100P	2	
C320,21		ECUX1H103KBV	C.CAPACITOR CH 50V 0.01U	2	
C324,25		ECUX1C104ZFV	C.CAPACITOR CH 16V 0.1U	2	
C328		ECUX1C104ZFV	C.CAPACITOR CH 16V 0.1U	1	
C329		ECUX1H102KBV	C.CAPACITOR 50V 1000P	1	
C330		ECUX1H101JCV	C.CAPACITOR CH 50V 100P	1	
C331-33		ECUX1C104ZFV	C.CAPACITOR CH 16V 0.1U	3	
C334		ECUX1H102KBV	C.CAPACITOR 50V 1000P	1	
C335,36		ECUX1C104ZFV	C.CAPACITOR CH 16V 0.1U	2	
C337		ECUX1H103KBV	C.CAPACITOR CH 50V 0.01U	1	
C338-40		ECUX1C104ZFV	C.CAPACITOR CH 16V 0.1U	3	
C343		ECUX1C104ZFV	C.CAPACITOR CH 16V 0.1U	1	
C350,51		ECUX1H101JCV	C.CAPACITOR CH 50V 100P	2	
C354,55		ECUX1H101JCV	C.CAPACITOR CH 50V 100P	2	
D1		MA153	DIODE	1	
D12,13		MA151K	DIODE	2	
D20		MA151K	DIODE	1	
HS1-S6		VSC3875		6	
IC1,C2		MC74HC86F	IC	2	
IC4,C5		MB88346BPFTF	IC	2	
IC6,C7		MC14053BF	IC	2	(R)
IC9		NJM082BM	IC	1	
IC11		NJM082BM	IC	1	
IC13		TC4S66F	IC	1	
IC17		AN79N12	IC	1	
IC18		AN78N12	IC	1	
IC20		MC14538BF	IC	1	
IC21,22		MC14015BF	IC	2	
IC23		MC74HC157AF	IC	1	
IC24,25		MC74HC86F	IC	2	
IC26		TC4S81F	IC	1	
IC40,41		MB10HL116PFF	IC	2	
IC42		MC74HC86F	IC	1	
IC43,44		AN79N12	IC	2	
IC60,61		UPC1663G	IC	2	
IC64,65		UPC1676G	IC	2	
IC68		MC14052BF	IC	1	
IC69		NJM1496M	IC	1	
IC70		NJM082BM	IC	1	
IC71,72		TC4S30F	IC	2	

REC AMP

Ref.No.	Part No.	Part Name & Description	Pcs	Remarks
IC200	MB10HL116PFF	IC	1	
IC201	MC10H102L	IC	1	
IC202	MC10H176L	IC	1	
IC203,04	MB10HL116PFF	IC	2	
L1,L2	ELEA100JA	COIL H	2	
L3	VLQEL06F100J	COIL 10UH	1	
L4	ELEA100JA	COIL H	1	
L5	VLQ0163JR47	COIL H	1	
L6	VLQ0163JR56	COIL H	1	
L7	VLQ0163JR47	COIL H	1	
L8	VLQ0163JR56	COIL H	1	
L15	ELEA100JA	COIL H	1	
P501	VJP1232T	CONNECTOR (MALE) 5P	1	
P502	VJP1236T	CONNECTOR (MALE) 9P	1	
P503	VJP1233G	CONNECTOR (MALE) 6P	1	
P506	VJP1233T	CONNECTOR (MALE) 6P	1	
P507,08	VJP1235T	CONNECTOR (MALE) 8P	2	
P509	VJP1233T	CONNECTOR (MALE) 6P	1	
P510	VJP1231T	CONNECTOR (MALE) 4P	1	
Q1-Q4	2SA1022-B	TRANSISTOR	4	(B)
Q5	2SB709-R	TRANSISTOR CHIP	1	(R)
Q6	2SD601-R	TRANSISTOR CHIP	1	(R)
Q20,21	2SC3356		2	
Q22-24	2SC1253	TRANSISTOR	3	
Q25,26	2SA1022-B	TRANSISTOR	2	(B)
Q29,30	2SK508	TRANSISTOR	2	
Q31	2SD601-R	TRANSISTOR CHIP	1	(R)
Q40,41	2SC3356		2	
Q42-44	2SC1253	TRANSISTOR	3	
Q45,46	2SA1022-B	TRANSISTOR	2	(B)
Q49,50	2SK508	TRANSISTOR	2	
Q51	2SD601-R	TRANSISTOR CHIP	1	(R)
Q60	2SC3356		1	
Q100-03	2SD1979	TRANSISTOR	4	
		RESISTORS		
R1,R2	ERJ3GEYJ103	M.RESISTOR CH 1/16W 10K	2	
R3	ERJ3GEYJ392	M.RESISTOR CH 1/16W 3.9K	1	
R4,R5	ERJ3GEYJ103	M.RESISTOR CH 1/16W 10K	2	
R6	ERJ3GEYJ332	M.RESISTOR CH 1/16W 3.3K	1	
R7	ERJ3GEYJ562	M.RESISTOR CH 1/16W 5.6K	1	
R8,R9	ERJ3GEYJ103	M.RESISTOR CH 1/16W 10K	2	
R10	ERJ3GEYJ392	M.RESISTOR CH 1/16W 3.9K	1	
R11,12	ERJ3GEYJ103	M.RESISTOR CH 1/16W 10K	2	
R13	ERJ3GEYJ562	M.RESISTOR CH 1/16W 5.6K	1	
R14	ERJ3GEYJ332	M.RESISTOR CH 1/16W 3.3K	1	
R15-19	ERJ3GEYJ103	M.RESISTOR CH 1/16W 10K	5	
R20	ERJ3GEYJ392	M.RESISTOR CH 1/16W 3.9K	1	
R21	ERJ3GEYJ103	M.RESISTOR CH 1/16W 10K	1	
R22,23	ERJ3GEYJ101	M.RESISTOR CH 1/16W 100	2	
R25	ERJ3GEYJ103	M.RESISTOR CH 1/16W 10K	1	
R26	ERJ3GEYJ392	M.RESISTOR CH 1/16W 3.9K	1	
R27,28	ERJ3GEYJ103	M.RESISTOR CH 1/16W 10K	2	
R29	ERJ3GEYJ332	M.RESISTOR CH 1/16W 3.3K	1	
R30	ERJ3GEYJ562	M.RESISTOR CH 1/16W 5.6K	1	
R31-33	ERJ3GEYJ103	M.RESISTOR CH 1/16W 10K	3	
R34-36	ERJ3GEYJ101	M.RESISTOR CH 1/16W 100	3	
R39-42	ERJ3GEYJ101	M.RESISTOR CH 1/16W 100	4	
R50,51	ERJ3GEYJ472	M.RESISTOR CH 1/16W 4.7K	2	
R54	ERJ3GEYJ103	M.RESISTOR CH 1/16W 10K	1	
R55	ERJ3GEYJ273	M.RESISTOR CH 1/16W 27K	1	
R56	ERJ3GEYJ103	M.RESISTOR CH 1/16W 10K	1	
R57	ERJ3GEYJ273	M.RESISTOR CH 1/16W 27K	1	
R62,63	ERJ3GEYJ223	M.RESISTOR CH 1/16W 22K	2	

Ref.No.	Part No.	Part Name & Description	Pcs	Remarks
R66,67	ERJ3GEYJ103	M.RESISTOR CH 1/16W 10K	2	
R68	ERJ3GEYJ153	M.RESISTOR CH 1/16W 15K	1	
R69	ERJ3GEYJ683	M.RESISTOR CH 1/16W 68K	1	
R71,72	ERJ3GEYJ103	M.RESISTOR CH 1/16W 10K	2	
R73	ERJ3GEYJ153	M.RESISTOR CH 1/16W 15K	1	
R74	ERJ3GEYJ683	M.RESISTOR CH 1/16W 68K	1	
R86	ERJ6GEYJ103	M.RESISTOR CH 1/10W 10K	1	
R87	ERJ6GEYJ563	M.RESISTOR CH 1/10W 56K	1	
R88	ERJ6GEYJ104	M.RESISTOR CH 1/10W 100K	1	
R89,90	ERJ6GEYJ103	M.RESISTOR CH 1/10W 10K	2	
R91	ERJ3GEYJ103	M.RESISTOR CH 1/16W 10K	1	
R124	ERJ3GEYJ103	M.RESISTOR CH 1/16W 10K	1	
R150	ERJ3GEYJ183	M.RESISTOR CH 1/16W 18K	1	
R151	ERJ3GEYJ562	M.RESISTOR CH 1/16W 5.6K	1	
R152-54	ERJ3GEYJ103	M.RESISTOR CH 1/16W 10K	3	
R155	ERJ3GEY0R00	M.RESISTOR CH 1/16W 0	1	
R156-59	ERJ3GEYJ103	M.RESISTOR CH 1/16W 10K	4	
R161	ERJ3GEYJ562	M.RESISTOR CH 1/16W 5.6K	1	
R162	ERJ3GEYJ103	M.RESISTOR CH 1/16W 10K	1	
R177-79	ERJ3GEYJ470	M.RESISTOR CH 1/16W 47	3	
R190,91	ERJ3GEYJ472	M.RESISTOR CH 1/16W 4.7K	2	
R200-02	ERJ6GEYJ101	M.RESISTOR CH 1/10W 100	3	
R203	ERJ6GEYJ471	M.RESISTOR CH 1/10W 470	1	
R205-11	ERJ6GEYJ471	M.RESISTOR CH 1/10W 470	7	
R212	ERJ6GEYJ121	M.RESISTOR CH 1/10W 120	1	
R213	ERJ6GEYJ471	M.RESISTOR CH 1/10W 470	1	
R214	ERJ6GEYJ121	M.RESISTOR CH 1/10W 120	1	
R215-20	ERJ6GEYJ471	M.RESISTOR CH 1/10W 470	6	
R221-24	ERJ6GEYJ101	M.RESISTOR CH 1/10W 100	4	
R225-28	ERJ6GEYJ332	M.RESISTOR CH 1/10W 3.3K	4	
R229-32	ERJ6GEYJ121	M.RESISTOR CH 1/10W 120	4	
R233,34	ERJ6GEYJ470	M.RESISTOR CH 1/10W 47	2	
R237-40	ERJ6GEYJ820	M.RESISTOR CH 1/10W 82	4	
R241-44	ERJ6GEYJ471	M.RESISTOR CH 1/10W 470	4	
R297	ERJ6GEYJ470	M.RESISTOR CH 1/10W 47	1	
R300	ERJ6GEYJ101	M.RESISTOR CH 1/10W 100	1	
R301	ERJ6GEYJ102	M.RESISTOR CH 1/10W 1K	1	
R304-07	ERJ6GEYJ471	M.RESISTOR CH 1/10W 470	4	
R308	ERJ6GEYJ123	M.RESISTOR CH 1/10W 12K	1	
R309	ERJ6GEYJ821	M.RESISTOR CH 1/10W 820	1	
R310	ERJ6GEYJ330	M.RESISTOR CH 1/10W 33	1	
R311	ERJ6GEYJ470	M.RESISTOR CH 1/10W 47	1	
R312	ERJ6GEYJ330	M.RESISTOR CH 1/10W 33	1	
R313	ERJ6GEYJ470	M.RESISTOR CH 1/10W 47	1	
R314,15	ERJ6GEYJ331	M.RESISTOR CH 1/10W 330	2	
R316	ERJ6GEYJ104	M.RESISTOR CH 1/10W 100K	1	
R317	ERG2SG390	M.RESISTOR 2W 39	1	
R319	ERJ6GEYJ103	M.RESISTOR CH 1/10W 10K	1	
R320	ERJ6GEYJ472	M.RESISTOR CH 1/10W 4.7K	1	
R321,22	ERJ6GEYJ182	M.RESISTOR CH 1/10W 1.8K	2	
R330	ERJ6GEYJ101	M.RESISTOR CH 1/10W 100	1	
R331	ERJ6GEYJ102	M.RESISTOR CH 1/10W 1K	1	
R334-37	ERJ6GEYJ471	M.RESISTOR CH 1/10W 470	4	
R338	ERJ6GEYJ123	M.RESISTOR CH 1/10W 12K	1	
R339	ERJ6GEYJ821	M.RESISTOR CH 1/10W 820	1	
R340	ERJ6GEYJ330	M.RESISTOR CH 1/10W 33	1	
R341	ERJ6GEYJ470	M.RESISTOR CH 1/10W 47	1	
R342	ERJ6GEYJ330	M.RESISTOR CH 1/10W 33	1	
R343	ERJ6GEYJ470	M.RESISTOR CH 1/10W 47	1	
R344,45	ERJ6GEYJ331	M.RESISTOR CH 1/10W 330	2	
R346	ERJ6GEYJ104	M.RESISTOR CH 1/10W 100K	1	
R347	ERG2SG390	M.RESISTOR 2W 39	1	
R349	ERJ6GEYJ103	M.RESISTOR CH 1/10W 10K	1	
R350	ERJ6GEYJ472	M.RESISTOR CH 1/10W 4.7K	1	
R351,52	ERJ6GEYJ182	M.RESISTOR CH 1/10W 1.8K	2	
R360,61	ERJ6GEYJ123	M.RESISTOR CH 1/10W 12K	2	
R364	ERJ8GCYJ100	M.RESISTOR CH 1/8W 10	1	
R365,66	ERJ8GCYG151	C.RESISTOR CH 1/8W 150	2	
R370,71	ERJ6GEYJ123	M.RESISTOR CH 1/10W 12K	2	
R374	ERJ8GCYJ100	M.RESISTOR CH 1/8W 10	1	
R375,76	ERJ8GCYG151	C.RESISTOR CH 1/8W 150	2	
R380,81	ERJ3GEYJ183	M.RESISTOR CH 1/16W 18K	2	
R382,83	ERJ3GEYJ103	M.RESISTOR CH 1/16W 10K	2	
R384,85	ERJ3GEYJ470	M.RESISTOR CH 1/16W 47	2	
R482,83	ERJ3GEYJ103	M.RESISTOR CH 1/16W 10K	2	

CYL POWER VEP85040A

Ref.No.		Part No.	Part Name & Description	Pcs	Remarks
R500,01		ERJ3GEYJ102	M.RESISTOR CH 1/16W 1K	2	
R502,03		ERJ3GEYJ101	M.RESISTOR CH 1/16W 100	2	
R504		ERJ3GEYJ150	M.RESISTOR CH 1/16W 15	1	
R505,06		ERJ3GEYJ102	M.RESISTOR CH 1/16W 1K	2	
R508		ERJ3GEYJ470	M.RESISTOR CH 1/16W 47	1	
R509		ERJ3GEYJ151	M.RESISTOR CH 1/16W 150	1	
R510,11		ERJ3GEYJ102	M.RESISTOR CH 1/16W 1K	2	
R512,13		ERJ3GEYJ101	M.RESISTOR CH 1/16W 100	2	
R514		ERJ3GEYJ150	M.RESISTOR CH 1/16W 15	1	
R515,16		ERJ3GEYJ102	M.RESISTOR CH 1/16W 1K	2	
R518		ERJ3GEYJ470	M.RESISTOR CH 1/16W 47	1	
R519		ERJ3GEYJ151	M.RESISTOR CH 1/16W 150	1	
R529		ERJ3GEYJ151	M.RESISTOR CH 1/16W 150	1	
R539		ERJ3GEYJ151	M.RESISTOR CH 1/16W 150	1	
R540		ERJ3GEYJ102	M.RESISTOR CH 1/16W 1K	1	
R541		ERJ3GEYJ331	M.RESISTOR CH 1/16W 330	1	
R542		ERJ3GEYJ681	M.RESISTOR CH 1/16W 680	1	
R543		ERJ3GEYJ102	M.RESISTOR CH 1/16W 1K	1	
R544		ERJ3GEYJ103	M.RESISTOR CH 1/16W 10K	1	
R545		ERJ3GEYJ102	M.RESISTOR CH 1/16W 1K	1	
R546		ERJ3GEYJ101	M.RESISTOR CH 1/16W 100	1	
R547		ERJ3GEYJ331	M.RESISTOR CH 1/16W 330	1	
R548		ERJ3GEYJ821	M.RESISTOR CH 1/16W 820	1	
R549		ERJ3GEYJ182	M.RESISTOR CH 1/16W 1.8K	1	
R550		ERJ3GEYJ102	M.RESISTOR CH 1/16W 1K	1	
R551		ERJ3GEYJ332	M.RESISTOR CH 1/16W 3.3K	1	
R552		ERJ3GEYJ392	M.RESISTOR CH 1/16W 3.9K	1	
R553		ERJ3GEYJ391	M.RESISTOR CH 1/16W 390	1	
R554		ERJ3GEYJ153	M.RESISTOR CH 1/16W 15K	1	
R555-57		ERJ3GEYJ103	M.RESISTOR CH 1/16W 10K	3	
R558		ERJ3GEYJ470	M.RESISTOR CH 1/16W 47	1	
R560,61		ERJ3GEYJ470	M.RESISTOR CH 1/16W 47	2	
R600-15		ERJ3GEYJ101	M.RESISTOR CH 1/16W 100	16	
R620,21		ERJ6GEYJ103	M.RESISTOR CH 1/10W 10K	2	
R622		ERJ6GEYJ102	M.RESISTOR CH 1/10W 1K	1	
R623,24		ERJ6GEYJ103	M.RESISTOR CH 1/10W 10K	2	
R625		ERJ6GEYJ102	M.RESISTOR CH 1/10W 1K	1	
R650		ERJ6GEYJ123	M.RESISTOR CH 1/10W 12K	1	
R651		ERJ6GEYJ152	M.RESISTOR CH 1/10W 1.5K	1	
R652,53		ERJ6GEYJ123	M.RESISTOR CH 1/10W 12K	2	
R654		ERJ6GEYJ152	M.RESISTOR CH 1/10W 1.5K	1	
R655		ERJ6GEYJ123	M.RESISTOR CH 1/10W 12K	1	
RY1,Y2		VSY2069	RELAY	2	
T1,T2		VETO141	TRANSFORMER	2	
TP200-02		VJR0646	TEST POINT	3	
TP206-08		VJR0646	TEST POINT	3	
TP213,14		VJR0646	TEST POINT	2	
TP217,18		VJR0646	TEST POINT	2	
TP221		VJR0646	TEST POINT	1	
TPG2-G5		VJR0646	TEST POINT	4	
VC1,C2		ECV1ZW20X53T	V.CAPACITOR 20P	2	
VR3		VRV0109B501	V.RESISTOR 500	1	
VR4		VRV0109B502	V.RESISTOR 5K	1	
			MISCELLANEOUS		
		VMP3037	P.C.BOARD HOLDER ANGLE	1	
		VMP3038	P.C.BOARD HOLDER ANGLE	1	
		VMZ2138	BARRIER	1	

Ref.No.		Part No.	Part Name & Description	Pcs	Remarks
		VSC2340	HEAT SINK	2	
		XTV3+6F	SCREW	6	
		XTV3+6FFR	SCREW	3	
	■	VEP85040A	P.C.BOARD W/COMPONENT		
			CYL POWER		
			CAPACITORS		
C5001		ECA1HXK220	.CAPACITOR V	1	
C5002		ECQB1H473JF	P.CAPACITOR 50V 0.047U	1	
C5003		ECQB1H392JF	.CAPACITOR V	1	
C5004		ECQB1H473JF	P.CAPACITOR 50V 0.047U	1	
C5005,06		ECA1HXK220	.CAPACITOR V	2	
C5007		ECA1HX1V101X	E.CAPACITOR 50V 100P	1	
C5008,09		ECQB1H104JF	P.CAPACITOR 50V 0.1U	2	
C5010,11		ECCD2H331J	C.CAPACITOR 500V 330	2	
C5020,21		ECQB1H104JF	P.CAPACITOR 50V 0.1U	2	
C5022		ECA1HXK220	.CAPACITOR V	1	
D5001-04		MA165VT	DIODE	4	
D5005,06		MA701A	DIODE	2	
HS5001		VSC3090		1	
IC5001		UPC494C	IC	1	
IC5002		AN7805F	IC	1	
IC5003		MC74HC04AN	IC	1	
IC5004		AN78N05	IC	1	
L5001		VLQ0242	COIL 30UH	1	
P5521		VJP1230T	CONNECTOR (MALE) 3P	1	
P5522		VJP1230R	CONNECTOR (MALE) 3P	1	
P5523		VJP3079		1	
P5525		VJP1232T	CONNECTOR (MALE) 5P	1	
P5526		VJP1231T	CONNECTOR (MALE) 4P	1	
P5527		VJP1230G	CONNECTOR (MALE) 3P	1	
P5708		VJP1143	CONNECTOR (MALE) 3P	1	
Q5001-04		2SB1321A	TRANSISTOR	4	
Q5005,06		2SK1059	TRANSISTOR	2	
			RESISTORS		
R5001		ERDS2TJ151	C.RESISTOR 1/4W 150	1	
R5002		ERDS2TJ512	C.RESISTOR 1/4W 5.1K	1	
R5003		ERDS2TJ332	C.RESISTOR 1/4W 3.3K	1	
R5004,05		ERDS2TJ222	C.RESISTOR 1/4W 2.2K	2	
R5006		ERDS2TJ472	C.RESISTOR 1/4W 4.7K	1	
R5007		ERDS2TJ562	C.RESISTOR 1/4W 5.6K	1	
R5008		ERDS2TJ272	C.RESISTOR 1/4W 2.7K	1	
R5009		ERDS2TJ223	C.RESISTOR 1/4W 22K	1	

MECA IF VEP80788A
SERVO CNTL VEP82097A

Ref.No.		Part No.	Part Name & Description	Pcs	Remarks
R5010,11		ERDS2TJ102	C.RESISTOR 1/4W 1K	2	
R5012		ERDS2TJ821	C.RESISTOR 1/4W 820	1	
R5013		ERDS2TJ562	C.RESISTOR 1/4W 5.6K	1	
R5014		ERDS2TJ272	C.RESISTOR 1/4W 2.7K	1	
R5015		ERDS2TJ221	C.RESISTOR 1/4W 220	1	
R5016		ERDS2TJ562	C.RESISTOR 1/4W 5.6K	1	
R5017		ERDS2TJ821	C.RESISTOR 1/4W 820	1	
R5018		ERDS2TJ272	C.RESISTOR 1/4W 2.7K	1	
R5019		ERDS2TJ221	C.RESISTOR 1/4W 220	1	
R5020		ERDS2TJ271	C.RESISTOR 1/4W 270	1	
R5021		ERDS2TJ103	C.RESISTOR 1/4W 10K	1	
R5022-24		ERDS2TJ560	C.RESISTOR 1/4W 56	3	
R5025		ERDS2TJ220	C.RESISTOR 1/4W 22	1	
TP5001-07		VJR0646	TEST POINT	7	
TPG5001,02		VJR0646	TEST POINT	2	
VR5001		VRV0064B502	V.RESISTOR 5K	1	
VR5002		VRV0064B501	V.RESISTOR 500	1	
			MISCELLANEOUS		
		VMP3270	P.C.BOARD HOLDER ANGLE	1	
		XNG26B	NUT	1	
		XTV3+6F	SCREW	2	
		XYNV26+K10	SCREW	1	
	■	VEP80788A	P.C.BOARD W/COMPONENT		
			MECA IF		
D1-D9		10E1	DIODE	9	
D10		10E1	DIODE	1	
D11,12		MA165	DIODE	2	
D13		10E1	DIODE	1	
P561		VJP1242T	CONNECTOR (MALE) 2P	1	
P562		VJP1243G	CONNECTOR (MALE) 3P	1	
P563		VJP3080		1	
P564		VJP1235T	CONNECTOR (MALE) 8P	1	
P565		VJP1247T	CONNECTOR (MALE) 7P	1	
P568		VJP1243T	CONNECTOR (MALE) 3P	1	
P569		VJP1230T	CONNECTOR (MALE) 3P	1	
P571		VJP1230R	CONNECTOR (MALE) 3P	1	
P572		VJP1232T	CONNECTOR (MALE) 5P	1	
P574		VJP1244G	CONNECTOR (MALE) 4P	1	
P575		VJP1244T	CONNECTOR (MALE) 4P	1	
P576		VJP1231R	CONNECTOR (MALE) 4P	1	
P577		VJP1231T	CONNECTOR (MALE) 4P	1	
P578		VJP1230R	CONNECTOR (MALE) 3P	1	
P579		VJP1230T	CONNECTOR (MALE) 3P	1	
P580		VJP1243G	CONNECTOR (MALE) 3P	1	
P581		VJP1230T	CONNECTOR (MALE) 3P	1	
P582		VJP1243T	CONNECTOR (MALE) 3P	1	
P583		VJP1230G	CONNECTOR (MALE) 3P	1	
P584		VJP1243T	CONNECTOR (MALE) 3P	1	
P585		VJP1243R	CONNECTOR (MALE) 3P	1	
P587,88		VJP3091		2	
P589		VJP3079		1	

Ref.No.		Part No.	Part Name & Description	Pcs	Remarks
P590,91		VJP1230T	CONNECTOR (MALE) 3P	2	
P595		VJP1230G	CONNECTOR (MALE) 3P	1	
P596		VJP1243T	CONNECTOR (MALE) 3P	1	
P597		VJP1230R	CONNECTOR (MALE) 3P	1	
P598		VJP1243R	CONNECTOR (MALE) 3P	1	
P599		VJP1244R	CONNECTOR (MALE) 4P	1	
P600		VJP3082	CONNECTOR	1	
P701		VJP3440A030	CONNECTOR	1	
P702		VJP3418A080	CONNECTOR	1	
P61021		VJP3091		1	
P61022		VJP1244T	CONNECTOR (MALE) 4P	1	
Q1		UN1212	TRANSISTOR	1	
Q2		2SB835	TRANSISTOR	1	
			RESISTORS		
R1-R8		ERDS2TJ181	C.RESISTOR 1/4W 180	8	
R10-15		ERDS2TJ181	C.RESISTOR 1/4W 180	6	
R16,17		ERDS2TJ151	C.RESISTOR 1/4W 150	2	
R19		ERFS2TJ332	W.RESISTOR 1/4W 3.3K	1	
R20		ERFS2TJ103	W.RESISTOR 1/4W 10K	1	
			MISCELLANEOUS		
		VHN0011	NYLON NUT	4	
		VMX1185	SPACER	5	
		VMZ2143	BARRIER	1	
		VMZ2144	BARRIER	2	
	■	VEP82097A	P.C.BOARD W/COMPONENT		
			SERVO CNTL		
			CAPACITORS		
C1		ECEV1HV010	E.CAPACITOR 50V 1U	1	
C2,C3		ECEV1EV330	E.CAPACITOR 25V 33U	2	
C4,C5		ECEV1CV470	E.CAPACITOR 16V 47U	2	
C6-C9		ECUM1H103ZFN	C.CAPACITOR CH 50V 0.01U	4	
C10,11		ECUM1H561JCN	C.CAPACITOR CH 50V 560P	2	
C12-14		ECUM1H330JCN	C.CAPACITOR CH 50V 33P	3	
C15		ECUM1H102JCN	C.CAPACITOR CH 50V 1000P	1	
C16-24		ECUM1H103ZFN	C.CAPACITOR CH 50V 0.01U	9	
C25		ECUM1H391JCN	C.CAPACITOR CH 50V 390P	1	
C26-28		ECUM1H330JCN	C.CAPACITOR CH 50V 33P	3	
C29-31		ECUM1H103ZFN	C.CAPACITOR CH 50V 0.01U	3	
C32		ECUM1H102JCN	C.CAPACITOR CH 50V 1000P	1	
C33		ECUM1H103ZFN	C.CAPACITOR CH 50V 0.01U	1	
C34,35		ECUM1H101JCN	C.CAPACITOR CH 50V 100P	2	
C36		ECUM1H103KBN	C.CAPACITOR CH 50V 0.01U	1	
C37-44		ECUM1H103ZFN	C.CAPACITOR CH 50V 0.01U	8	
D1		MA157	DIODE	1	
IC1-C3		VLF0931	COIL	3	
IC4		NJM79L12UA	IC	1	
IC5		NJM78L12UA	IC	1	
IC6,C7		NJM78L05UA	IC	2	

OT

HEAD CONECTION VEP80785A
EM EJECT VEP82098A SERIAL IF VEP88098A

Ref.No.		Part No.	Part Name & Description	Pcs	Remarks
IC8		UPC4558G2	IC	1	
IC9		NJM4580ED	IC	1	
IC10,11		NJM4580ED	IC	2	
IC12		NJM2903M	IC	1	
IC13,14		AD707KR	IC	2	
IC15		NJM4580ED	IC	1	
P1		VJP1231T	CONNECTOR (MALE) 4P	1	
P2		VJP1231G	CONNECTOR (MALE) 4P	1	
P3		VJP1231R	CONNECTOR (MALE) 4P	1	
P4		VJP1231B	CONNECTOR (MALE) 4P	1	
P6		VJP1230T	CONNECTOR (MALE) 3P	1	
P7		VJP1230R	CONNECTOR (MALE) 3P	1	
P8		VJP3082	CONNECTOR	1	
P9		VJP3081	CONNECTOR	1	
Q1		2SD601-R	TRANSISTOR CHIP	1	(Q,R)
			RESISTORS		
R1,R2		VRE0034E683	M.RESISTOR CH 1/10W 68K	2	
R3		ERJ6GEYJ562	M.RESISTOR CH 1/10W 5.6K	1	
R4		VRE0034E562	M.RESISTOR CH 1/10W 5.6K	1	
R5		ERJ6GEYJ562	M.RESISTOR CH 1/10W 5.6K	1	
R6		VRE0034E562	M.RESISTOR CH 1/10W 5.6K	1	
R7,R8		VRE0034E683	M.RESISTOR CH 1/10W 68K	2	
R9		ERJ6GEYJ562	M.RESISTOR CH 1/10W 5.6K	1	
R10		VRE0034E562	M.RESISTOR CH 1/10W 5.6K	1	
R11		ERJ6GEYJ562	M.RESISTOR CH 1/10W 5.6K	1	
R12		VRE0034E562	M.RESISTOR CH 1/10W 5.6K	1	
R13,14		ERJ6GEYJ562	M.RESISTOR CH 1/10W 5.6K	2	
R15		VRE0034E821	M.RESISTOR CH 1/10W 820	1	
R16		VRE0034E100	M.RESISTOR CH 1/10W 10	1	
R17		ERJ6GEYJ272	M.RESISTOR CH 1/10W 2.7K	1	
R18		ERJ6GEYJ474	M.RESISTOR CH 1/10W 470K	1	
R19,20		ERJ6GEYJ394	M.RESISTOR CH 1/10W 390K	2	
R21		ERJ6GEYJ274	M.RESISTOR CH 1/10W 270K	1	
R22-24		ERJ6GEYJ223	M.RESISTOR CH 1/10W 22K	3	
R25-27		ERJ6GEYJ393	M.RESISTOR CH 1/10W 39K	3	
R28		ERJ6GEYJ153	M.RESISTOR CH 1/10W 15K	1	
R29-31		ERJ6GEYJ103	M.RESISTOR CH 1/10W 10K	3	
R32-34		ERJ6GEYJ563	M.RESISTOR CH 1/10W 56K	3	
R35		ERJ6GEYJ272	M.RESISTOR CH 1/10W 2.7K	1	
R36		ERJ6GEYJ103	M.RESISTOR CH 1/10W 10K	1	
R37		ERJ6GEYJ223	M.RESISTOR CH 1/10W 22K	1	
R38		ERJ6GEYJ155	.RESISTOR W	1	
R39		ERJ6GEYJ104	M.RESISTOR CH 1/10W 100K	1	
R40,41		ERJ6GEYJ332	M.RESISTOR CH 1/10W 3.3K	2	
R42		ERJ6GEYJ474	M.RESISTOR CH 1/10W 470K	1	
R43,44		ERJ6GEYJ394	M.RESISTOR CH 1/10W 390K	2	
R45		VRE0034E102	M.RESISTOR CH 1/10W 1K	1	
R46-48		ERJ6GEYJ223	M.RESISTOR CH 1/10W 22K	3	
R49		ERJ6GEYJ394	M.RESISTOR CH 1/10W 390K	1	
R50		ERJ6GEYJ103	M.RESISTOR CH 1/10W 10K	1	
R51		VRE0034E102	M.RESISTOR CH 1/10W 1K	1	
R52		ERJ6GEYJ393	M.RESISTOR CH 1/10W 39K	1	
R53-57		ERJ6GEYJ103	M.RESISTOR CH 1/10W 10K	5	
R58,59		ERJ6GEYJ393	M.RESISTOR CH 1/10W 39K	2	
R60-62		ERJ6GEYJ563	M.RESISTOR CH 1/10W 56K	3	
R63		ERJ6GEYJ561	M.RESISTOR CH 1/10W 560	1	
R64		ERJ6GEYJ221	M.RESISTOR CH 1/10W 220	1	
R65,66		ERJ6GEYJ820	M.RESISTOR CH 1/10W 82	2	
R67		ERJ6GEYJ221	M.RESISTOR CH 1/10W 220	1	
R68,69		ERJ6GEYJ820	M.RESISTOR CH 1/10W 82	2	
TP1,P2		VJR0646	TEST POINT	2	
TPG		VJR0646	TEST POINT	1	

Ref.No.		Part No.	Part Name & Description	Pcs	Remarks
VR1		VRV0064B104	V.RESISTOR 100K	1	
VR2		VRV0064B202	V.RESISTOR 2K	1	
			MISCELLANEOUS		
		VMA8463	ANGLE	1	
		XTV26+6F	SCREW	4	
	■	VEP80785A	P.C.BOARD W/COMPONENT		
			HEAD CONECTION		
P2		VJP1230T	CONNECTOR (MALE) 3P	1	
P3		VJP3080		1	
P4		VJP1230G	CONNECTOR (MALE) 3P	1	
P6		VJP3083		1	
P9		VJP1230B	CONNECTOR (MALE) 3P	1	
P13		VJP1233T	CONNECTOR (MALE) 6P	1	
			MISCELLANEOUS		
		VMX1305	SPACER	2	
		VMX1411	SPACER	2	
	■	VEP82098A	P.C.BOARD W/COMPONENT		
			EM EJECT		
P1,P2		VJP3082	CONNECTOR	2	
	■	VEP88098A	P.C.BOARD W/COMPONENT		
			SERIAL IF		
			CAPACITORS		
C8011		ECEV1EV100	E.CAPACITOR 25V 10U	1	
C8012		ECUX1H301JCV	.CAPACITOR V	1	
C8013,14		ECEV1HN4R7	.CAPACITOR V	2	
C8015-22		ECUM1E104KBN	C.CAPACITOR 25V 0.1U	8	
C8023,24		ECEV1EV100	E.CAPACITOR 25V 10U	2	
C8026,27		ECUX1H470JCV	C.CAPACITOR 50V 47P	2	
C8028-39		ECUX1H103KBV	C.CAPACITOR CH 50V 0.01U	12	
C8041-44		ECEV1CV470	E.CAPACITOR 16V 47U	4	
C8045-48		ECUX1H103KBV	C.CAPACITOR CH 50V 0.01U	4	
C8912-70		ECUM1H103ZFN	C.CAPACITOR CH 50V 0.01U	59	

AUDIO JACK VEP84157A

Ref.No.		Part No.	Part Name & Description	Pcs	Remarks
D8001,02		MA151K	DIODE	2	
D8003-06		MA157	DIODE	4	
D8007		MA151K	DIODE	1	
FL8001,02		VLF0931	COIL	2	
IC8002		CG21503-132	IC	1	
IC8003-05		MC10H124M	IC	3	
IC8006		STV1601A	IC	1	
IC8007,08		74F574SJ	IC	2	
IC8009-11		MC10H124M	IC	3	
IC8012		SN75158P	IC	1	
IC8018		SN74AS74NS	IC	1	
IC8019		DS9637ACN	IC	1	
IC8020		SN74LS244NS	IC	1	
IC8022		SN74LS157NS	IC	1	
IC8033		STV1602A	IC	1	
IC8034		MC74HC04AF	IC	1	
IC8035-37		MC10H125M	IC	3	
IC8038		CG21503-131	IC	1	
IC8040-42		SN74S1051NS	IC	3	
IC8043		MC74HC08AF	IC	1	
IC8045		SN74AS244NS	IC	1	
IC8046-48		MC10H125M	IC	3	
IC8049		MC74HC573AF	IC	1	
IC8050		MC74HC138AF	IC	1	
IC8051		MC74HC02AF	IC	1	
L8001		VLQ0188KR39N	COIL 0.39UH	1	
P8001		VJS3375B080	CONNECTOR	1	
P8002		VJP3461	CONNECTOR	1	
P8003		VJP1232T	CONNECTOR (MALE) 5P	1	
P8004		VJP1230T	CONNECTOR (MALE) 3P	1	
P8007		VJP3440B012	CONNECTOR	1	
			RESISTORS		
R8015-36		ERJ3GEYJ471	M.RESISTOR CH 1/16W 470	22	
R8079		ERJ3GEYJ102	M.RESISTOR CH 1/16W 1K	1	
R8080		ERJ3GEYJ103	M.RESISTOR CH 1/16W 10K	1	
R8081		ERJ3GEYJ102	M.RESISTOR CH 1/16W 1K	1	
R8082-03		ERJ3GEYJ471	M.RESISTOR CH 1/16W 470	22	
R8104,05		ERJ3GEYJ102	M.RESISTOR CH 1/16W 1K	2	
R8106,07		ERJ3GEYJ101	M.RESISTOR CH 1/16W 100	2	
R8113		ERJ3GEYJ102	M.RESISTOR CH 1/16W 1K	1	
R8115,16		ERJ3GEYJ101	M.RESISTOR CH 1/16W 100	2	
R8121-24		ERJ3GEYJ471	M.RESISTOR CH 1/16W 470	4	
R8126-32		ERJ3GEYJ471	M.RESISTOR CH 1/16W 470	7	
R8135		ERJ3GEYJ471	M.RESISTOR CH 1/16W 470	1	
R8139		ERJ3GEYJ223	M.RESISTOR CH 1/16W 22K	1	
R8140		VRE0034E750	M.RESISTOR CH 1/10W 75	1	
R8141		ERJ3GEYJ101	M.RESISTOR CH 1/16W 100	1	
R8142		ERJ3GEYJ104	M.RESISTOR CH 1/16W 100K	1	
R8180		ERJ3GEYJ103	M.RESISTOR CH 1/16W 10K	1	
R8185-08		ERJ3GEYJ560	M.RESISTOR CH 1/16W 56	24	
R8209		ERJ3GEYJ103	M.RESISTOR CH 1/16W 10K	1	
R8211		ERJ3GEYJ102	M.RESISTOR CH 1/16W 1K	1	
R8300		ERJ3GEYJ102	M.RESISTOR CH 1/16W 1K	1	
R8302-27		ERJ3GEYJ102	M.RESISTOR CH 1/16W 1K	26	
R8329-36		ERJ3GEYJ102	M.RESISTOR CH 1/16W 1K	8	
R8338-56		ERJ3GEYJ102	M.RESISTOR CH 1/16W 1K	19	
R8400-05		ERJ3GEYJ102	M.RESISTOR CH 1/16W 1K	6	
R8408,09		ERJ3GEYJ102	M.RESISTOR CH 1/16W 1K	2	

Ref.No.		Part No.	Part Name & Description	Pcs	Remarks
R8411-33		ERJ3GEYJ102	M.RESISTOR CH 1/16W 1K	23	
SW8002,03		VSS0342	SWITCH	2	
T8001-04		VLT0654		4	
TP8013,14		VJR0646	TEST POINT	2	
TP8019,20		VJR0646	TEST POINT	2	
TP8023		VJR0646	TEST POINT	1	
TP8300-19		VJR0548	PIN	20	
TP8400-30		VJR0548	PIN	31	
TPG8021,22		VJR0646	TEST POINT	2	
VR8001,02		VRV0109B103	V.RESISTOR 10K	2	
			MISCELLANEOUS		
		VJF0818	HOLDER	2	
		VJF0961	HOLDER	3	
		VSC1381	HEAT SINK	2	
		VSC1382	HEAT SINK	2	
	■	VEP84157A	P.C.BOARD W/COMPONENT		
			AUDIO JACK		
			CAPACITORS		
C4001-18		ECUM1H103ZFN	C.CAPACITOR CH 50V 0.01U	18	
J4001,02		VJS3417		2	
J4003,04		VJP3417		2	
J4005		VJS3417		1	
J4006		VJP3417		1	
J4007-11		VJS3417		5	
J4012-18		VJP3417		7	
P401		VJP3440B012	CONNECTOR	1	
P402		VJP3440B016	CONNECTOR	1	
P403		VJP3440B006	CONNECTOR	1	
P404		VJP3440B022	CONNECTOR	1	
			RESISTORS		
R4001		ERJ6GEY0R00	M.RESISTOR CH 1/10W 0	1	
R4003		ERJ6GEY0R00	M.RESISTOR CH 1/10W 0	1	
R4005		ERJ6GEY0R00	M.RESISTOR CH 1/10W 0	1	
R4007		ERJ6GEY0R00	M.RESISTOR CH 1/10W 0	1	
R4009		ERJ6GEY0R00	M.RESISTOR CH 1/10W 0	1	
R4011		ERJ6GEY0R00	M.RESISTOR CH 1/10W 0	1	
R4013		ERJ6GEY0R00	M.RESISTOR CH 1/10W 0	1	
R4015		ERJ6GEY0R00	M.RESISTOR CH 1/10W 0	1	
R4017		ERJ6GEY0R00	M.RESISTOR CH 1/10W 0	1	

VIDEO JACK VEP88099A
SERIAL I/O VEP88106A

Ref.No.		Part No.	Part Name & Description	Pcs	Remarks
R4019		ERJ6GEY0R00	M.RESISTOR CH 1/10W 0	1	
R4021		ERJ6GEY0R00	M.RESISTOR CH 1/10W 0	1	
R4023		ERJ6GEY0R00	M.RESISTOR CH 1/10W 0	1	
R4025		ERJ6GEY0R00	M.RESISTOR CH 1/10W 0	1	
R4027		ERJ6GEY0R00	M.RESISTOR CH 1/10W 0	1	
R4029		ERJ6GEY0R00	M.RESISTOR CH 1/10W 0	1	
R4031		ERJ6GEY0R00	M.RESISTOR CH 1/10W 0	1	
R4033		ERJ6GEY0R00	M.RESISTOR CH 1/10W 0	1	
R4035		ERJ6GEY0R00	M.RESISTOR CH 1/10W 0	1	
R4037		ERJ6GEY0R00	M.RESISTOR CH 1/10W 0	1	
R4039		ERJ6GEY0R00	M.RESISTOR CH 1/10W 0	1	
R4041		ERJ6GEY0R00	M.RESISTOR CH 1/10W 0	1	
R4043		ERJ6GEY0R00	M.RESISTOR CH 1/10W 0	1	
R4045		ERJ6GEY0R00	M.RESISTOR CH 1/10W 0	1	
R4047		ERJ6GEY0R00	M.RESISTOR CH 1/10W 0	1	
R4049		ERJ6GEY0R00	M.RESISTOR CH 1/10W 0	1	
R4051		ERJ6GEY0R00	M.RESISTOR CH 1/10W 0	1	
R4053		ERJ6GEY0R00	M.RESISTOR CH 1/10W 0	1	
R4055		ERJ6GEY0R00	M.RESISTOR CH 1/10W 0	1	
	■	VEP88099A	P.C.BOARD W/COMPONENT		
			VIDEO JACK		
			CAPACITORS		
C1		ECEV1CV470	E.CAPACITOR 16V 47U	1	
C2,C3		ECUM1H104ZFN	C.CAPACITOR CH 50V 0.1U	2	
C4		ECEV1CV470	E.CAPACITOR 16V 47U	1	
C5,C6		ECUM1H104ZFN	C.CAPACITOR CH 50V 0.1U	2	
C7-C9		ECUM1H104ZFN	C.CAPACITOR CH 50V 0.1U	3	
C10		ECUM1H104ZFN	C.CAPACITOR CH 50V 0.1U	1	
C11		ECEV1CV470	E.CAPACITOR 16V 47U	1	
C12		ECUM1H104ZFN	C.CAPACITOR CH 50V 0.1U	1	
C13		ECUM1E104KBN	C.CAPACITOR 25V 0.1U	1	
C14		ECUM1H150JCN	C.CAPACITOR CH 50V 15P	1	
C15		ECUM1H390JCN	C.CAPACITOR CH 50V 39P	1	
C16		ECUM1H104ZFN	C.CAPACITOR CH 50V 0.1U	1	
C17		ECEV1CV470	E.CAPACITOR 16V 47U	1	
C18		ECUM1H104ZFN	C.CAPACITOR CH 50V 0.1U	1	
C20		ECEV1CV470	E.CAPACITOR 16V 47U	1	
C21,22		ECUM1H104ZFN	C.CAPACITOR CH 50V 0.1U	2	
C23-28		ECUM1H104ZFN	C.CAPACITOR CH 50V 0.1U	6	
D1,D2		MA151K	DIODE	2	
IC1		NJM78L09UA	IC	1	
IC2		NJM79L09UA	IC	1	
IC3		NJM78L12UA	IC	1	
IC4		NJM79L12UA	IC	1	
IC5		EL2044CS	IC	1	
IC6		UPD71055GB	IC	1	
IC12		MC74HC04AF	IC	1	
J1-J9		VJS3459		9	
J11,12		VJP3414A009		2	
J13		VJP3414A015		1	
J14,15		VJP3414A025		2	
L1		VLQ0319K390	COIL 39UH	1	

Ref.No.		Part No.	Part Name & Description	Pcs	Remarks
P410		VJP3418B040	CONNECTOR	1	
P411		VJP3416	CONNECTOR	1	
P412		VJP1874T	CONNECTOR	1	
P413		VJP3415	CONNECTOR	1	
Q1		2SA1254	TRANSISTOR	1	
Q2		2SC2188	TRANSISTOR	1	
Q3		2SA1254	TRANSISTOR	1	
Q4		2SC2188	TRANSISTOR	1	
Q10-20		UN2213	TRANSISTOR-RESISTOR	11	
			RESISTORS		
R1,R2		VRE0034E750	M.RESISTOR CH 1/10W 75	2	
R3		ERJ6GEYJ334	M.RESISTOR CH 1/10W 330K	1	
R4		ERJ6GEYJ332	M.RESISTOR CH 1/10W 3.3K	1	
R5,R6		ERJ6GEYJ470	M.RESISTOR CH 1/10W 47	2	
R7		ERJ6GEYJ102	M.RESISTOR CH 1/10W 1K	1	
R8		ERJ6GEYJ330	M.RESISTOR CH 1/10W 33	1	
R9		ERJ6GEYJ334	M.RESISTOR CH 1/10W 330K	1	
R10		ERJ6GEYJ332	M.RESISTOR CH 1/10W 3.3K	1	
R11,12		ERJ6GEYJ470	M.RESISTOR CH 1/10W 47	2	
R13		ERJ6GEYJ102	M.RESISTOR CH 1/10W 1K	1	
R14		ERJ6GEYJ330	M.RESISTOR CH 1/10W 33	1	
R15,16		ERJ6GEYJ100	M.RESISTOR CH 1/10W 10	2	
R17,18		ERJ6GEYJ470	M.RESISTOR CH 1/10W 47	2	
R19		ERJ6GEYJ102	M.RESISTOR CH 1/10W 1K	1	
R20		ERJ6GEYJ103	M.RESISTOR CH 1/10W 10K	1	
R21		ERJ6GEYJ152	M.RESISTOR CH 1/10W 1.5K	1	
R26		VRE0034E750	M.RESISTOR CH 1/10W 75	1	
R30-51		ERJ6GEYJ103	M.RESISTOR CH 1/10W 10K	22	
R52-54		ERJ6GEY0R00	M.RESISTOR CH 1/10W 0	3	
SW1,W2		VSS0307	SWITCH	2	
			MISCELLANEOUS		
		VMP3968	P.C.BOARD HOLDER ANGLE	1	
	■	VEP88106A	P.C.BOARD W/COMPONENT		
			SERIAL I/O		
			CAPACITORS		
C100		ECUM1E104KBN	C.CAPACITOR 25V 0.1U	1	
C101		ECEV1CV470	E.CAPACITOR 16V 47U	1	
C102		ECUM1H104ZFN	C.CAPACITOR CH 50V 0.1U	1	
C103-11		ECUM1E104KBN	C.CAPACITOR 25V 0.1U	9	
C112		ECEV1CV100	E.CAPACITOR 16V 10U	1	
IC101		STV1389AQ	IC	1	
J16-19		VJS3463		4	

POWER 1 VEP81067A
POWER 1 SUB VEP81070A　　POWER 2 SUB VEP81072A

Ref.No.		Part No.	Part Name & Description	Pcs	Remarks
P420		VJP3416	CONNECTOR	1	
Q1,Q2		2SC2671	TRANSISTOR	2	
			RESISTORS		
R101,02		ERJ6GEYJ221	M.RESISTOR CH 1/10W 220	2	
R103		ERJ6GEYJ121	M.RESISTOR CH 1/10W 120	1	
R104,05		ERJ6GEYJ330	M.RESISTOR CH 1/10W 33	2	
R106		ERJ6GEYJ820	M.RESISTOR CH 1/10W 82	1	
R107,08		VRE0034E750	M.RESISTOR CH 1/10W 75	2	
R109		ERJ6GEYJ103	M.RESISTOR CH 1/10W 10K	1	
R110,11		ERJ6GEYJ221	M.RESISTOR CH 1/10W 220	2	
R112,13		ERJ6GEYJ100	M.RESISTOR CH 1/10W 10	2	
R114-16		ERJ6GEYJ151	M.RESISTOR CH 1/10W 150	3	
R117		VRE0034E750	M.RESISTOR CH 1/10W 75	1	
R118		ERJ6GEYJ103	M.RESISTOR CH 1/10W 10K	1	
R119,20		ERJ6GEYJ151	M.RESISTOR CH 1/10W 150	2	
R121		VRE0034E750	M.RESISTOR CH 1/10W 75	1	
R122		ERJ6GEYJ103	M.RESISTOR CH 1/10W 10K	1	
R123		VRE0034E750	M.RESISTOR CH 1/10W 75	1	
R124		ERJ6GEYJ103	M.RESISTOR CH 1/10W 10K	1	
	■	VEP81067A	P.C.BOARD W/COMPONENT		
			POWER 1		
	■	VEP81070A	P.C.BOARD W/COMPONENT		FOR VEP81067A
			POWER 1 SUB		
	■	VEP81072A	P.C.BOARD W/COMPONENT		FOR VEP81067A
			POWER 2 SUB		
			CAPACITORS		
C1008		ECQU2A224MN	P.CAPACITOR 250V 0.22U	1	
C1009		ECQE2A104KF	.CAPACITOR V	1	
C1010		ECEA2GGE100	.CAPACITOR V	1	
C1011		ECA1CXS100	.CAPACITOR V	1	
C1012		ECQV1H105J	.CAPACITOR V	1	
C1013		ECQE2A223KF	.CAPACITOR V	1	
C1014-17		ECOS2EB102E	.CAPACITOR V	4	
C1020		ECKD3A331KB	C.CAPACITOR 1KV 330P	1	
C1021		ECQB1H472JF		1	
C1022		ECA1CXK101F	.CAPACITOR V	1	
C1023		ECA1HXS010	.CAPACITOR V	1	
C1024,25		ECA1HXLV470G	.CAPACITOR V	2	
C1080		ECA1VXK470F	.CAPACITOR V	1	
C1081		ECA1HXKN010F	.CAPACITOR V	1	
C1086		ECA1HXKN010F	.CAPACITOR V	1	
C1090		ECA1VXK470F	.CAPACITOR V	1	
C1091		ECA1HXKN010F	.CAPACITOR V	1	
C1096		ECA1HXKN010F	.CAPACITOR V	1	
C1102		ECUM1H103ZFN	C.CAPACITOR CH 50V 0.01U	1	
C1103		ECEV1CV470	E.CAPACITOR 16V 47U	1	
C1104		ECUM1H104ZFN	C.CAPACITOR CH 50V 0.1U	1	
C1105		ECUM1H472KBN	C.CAPACITOR CH 50V 4700P	1	
C1106		ECEV1CV100	E.CAPACITOR 16V 10U	1	
C1107		ECUM1H103ZFN	C.CAPACITOR CH 50V 0.01U	1	
C1108		ECEV1CV100	E.CAPACITOR 16V 10U	1	
C1112		ECUM1E224ZFM	C.CAPACITOR CH 25V 0.22U	1	
C1113		ECUM1H102JCN	C.CAPACITOR CH 50V 1000P	1	
C1114		ECEV1EV100	E.CAPACITOR 25V 10U	1	
C1115		ECUM1H472KBN	C.CAPACITOR CH 50V 4700P	1	
C1116		ECUM1H473ZFN	C.CAPACITOR CH 50V 0.047U	1	
C1117		ECEV1CV470	E.CAPACITOR 16V 47U	1	

Ref.No.		Part No.	Part Name & Description	Pcs	Remarks
CN1001		VJP3117		1	
CN1101		VJR0164	PACK PIN	1	
			CAPACITORS		
C1008S		VMZ1798	.CAPACITOR V	1	
D1001-04		ERC25-04	DIODE	4	
D1005		D10XB60H	DIODE	1	
D1010		D1N60		1	
D1020,21		ERB35-02	DIODE	2	
D1022		11DQ04	DIODE	1	
D1023		11DQ06	DIODE	1	
D1080,81		11DQ04	DIODE	2	
D1085,86		11DQ04	DIODE	2	
D1090,91		11DQ04	DIODE	2	
D1095,96		11DQ04	DIODE	2	
D1100		10E1	DIODE	1	
D1101		MA3047-M	DIODE	1	
D1102		MA151K	DIODE	1	
D1103		MA151WA	DIODE	1	
D1104		MA151K	DIODE	1	
D1106		MA3075M	DIODE	1	
D1107		MA153	DIODE	1	
D1108		MA3047-M	DIODE	1	
DZ1020		RD5.1ESB3		1	
IC1001		MK1110	IC	1	
IC1101,02		TL495CN	IC	2	
IC1103		UPC339G2	IC	1	
IC1104		MN4013BS	IC	1	
IC1105		UPC4556G2		1	
IC1106		TL431CLP	IC	1	
JP4		VJP1145		1	
Q1001-04		2SC3528	TRANSISTOR	4	
Q1020		2SC3979	TRANSISTOR	1	
Q1021		2SD637	TRANSISTOR	1	
Q1022		2SB644	TRANSISTOR	1	
Q1080		2SA1096	TRANSISTOR	1	
Q1085		2SA1096	TRANSISTOR	1	
Q1090		2SA1096	TRANSISTOR	1	
Q1095		2SA1096	TRANSISTOR	1	
Q1101		UN2113	TRANSISTOR-RESISTOR	1	
Q1103		UN2113	TRANSISTOR-RESISTOR	1	
Q1104		2SB710-R	TRANSISTOR CHIP	1	(R)
Q1105		2SD602-R	TRANSISTOR	1	
Q1106		UN2213	TRANSISTOR-RESISTOR	1	
Q1107		2SD602-R	TRANSISTOR	1	
Q1110,11		UN2213	TRANSISTOR-RESISTOR	2	
Q1112,13		2SB710-R	TRANSISTOR CHIP	2	(R)
Q1114		UN2213	TRANSISTOR-RESISTOR	1	
			RESISTORS		

POWER 2 VEP81068A

Ref.No.		Part No.	Part Name & Description	Pcs	Remarks
R1002-04		VREO086	.RESISTOR W	3	
R1005		ERDS1TJ101	C.RESISTOR 1/2W 100	1	
R1006		ERG3SJ101	.RESISTOR W	1	
R1018,19		ERG2SJ333	M.RESISTOR 2W 33K	2	
R1020,21		ERDS1TJ104	C.RESISTOR 1/2W 100K	2	
R1022		ERG2SJ101	M.RESISTOR 2W 100	1	
R1023		ERDS2TJ2R2	C.RESISTOR 1/4W 2.2	1	
R1024,25		ERDS2TJ101	C.RESISTOR 1/4W 100	2	
R1026,27		ERDS2TJ102	C.RESISTOR 1/4W 1K	2	
R1028		ERDS2TJ101	C.RESISTOR 1/4W 100	1	
R1080		ERDS2TJ101	C.RESISTOR 1/4W 100	1	
R1081		ERX1SJ5R1	M.RESISTOR 1W 5.1	1	
R1082		ERDS1TJ100	C.RESISTOR 1/2W 10	1	
R1085		ERDS2TJ101	C.RESISTOR 1/4W 100	1	
R1086		ERX1SJ5R1	M.RESISTOR 1W 5.1	1	
R1087		ERDS1TJ100	C.RESISTOR 1/2W 10	1	
R1090		ERDS2TJ101	C.RESISTOR 1/4W 100	1	
R1091		ERX1SJ5R1	M.RESISTOR 1W 5.1	1	
R1093		ERDS1TJ100	C.RESISTOR 1/2W 10	1	
R1095		ERDS2TJ101	C.RESISTOR 1/4W 100	1	
R1096		ERX1SJ5R1	M.RESISTOR 1W 5.1	1	
R1097		ERDS1TJ100	C.RESISTOR 1/2W 10	1	
R1100		ERDS2TJ680	C.RESISTOR 1/4W 68	1	
R1101		ERJ6GEYJ472	M.RESISTOR CH 1/10W 4.7K	1	
R1102		ERJ6GEYJ331	M.RESISTOR CH 1/10W 330	1	
R1103		ERJ6GEYJ103	M.RESISTOR CH 1/10W 10K	1	
R1104		ERJ6GEYJ181	M.RESISTOR CH 1/10W 180	1	
R1105,06		ERJ6GEYJ222	M.RESISTOR CH 1/10W 2.2K	2	
R1107		ERJ6GEYJ223	M.RESISTOR CH 1/10W 22K	1	
R1108		ERJ6GEYJ101	M.RESISTOR CH 1/10W 100	1	
R1109		ERJ6GEYJ561	M.RESISTOR CH 1/10W 560	1	
R1110		ERJ6GEYJ101	M.RESISTOR CH 1/10W 100	1	
R1115		ERJ6GEYJ103	M.RESISTOR CH 1/10W 10K	1	
R1118		ERJ6GEYJ153	M.RESISTOR CH 1/10W 15K	1	
R1119		ERJ6GEYJ222	M.RESISTOR CH 1/10W 2.2K	1	
R1120		ERJ6GEYJ223	M.RESISTOR CH 1/10W 22K	1	
R1121		ERJ6GEYJ123	M.RESISTOR CH 1/10W 12K	1	
R1122		ERJ6GEYJ124	M.RESISTOR CH 1/10W 120K	1	
R1123		ERJ6GEYJ102	M.RESISTOR CH 1/10W 1K	1	
R1125		ERJ6GEYJ102	M.RESISTOR CH 1/10W 1K	1	
R1126		ERJ6GEYJ223	M.RESISTOR CH 1/10W 22K	1	
R1127-29		ERJ6GEYJ473	M.RESISTOR CH 1/10W 47K	3	
R1130		ERJ6GEYJ221	M.RESISTOR CH 1/10W 220	1	
R1131		VRED034E562	M.RESISTOR CH 1/10W 5.6K	1	
R1132		VRED034E432	M.RESISTOR CH 1/10W 4.3K	1	
R1133		ERJ6GEYJ303	.RESISTOR W	1	
R1134		ERJ6GEYJ133	M.RESISOTR CH 1/10W 13K	1	
R1135		ERJ6GEYJ331	M.RESISTOR CH 1/10W 330	1	
R1136,37		ERJ6GEYJ103	M.RESISTOR CH 1/10W 10K	2	
R1138		VRED034E512	M.RESISTOR CH 1/10W 5.1K	1	
R1142		ERJ6GEYJ103	M.RESISTOR CH 1/10W 10K	1	
R1143		ERJ6GEYJ331	M.RESISTOR CH 1/10W 330	1	
R1144,45		ERJ6GEYJ222	M.RESISTOR CH 1/10W 2.2K	2	
R1147		ERJ6GEYJ103	M.RESISTOR CH 1/10W 10K	1	
R1148		ERJ6GEYJ223	M.RESISTOR CH 1/10W 22K	1	
R1149		ERJ6GEYJ101	M.RESISTOR CH 1/10W 100	1	
R1150		ERJ6GEYJ392	M.RESISTOR CH 1/10W 3.9K	1	
R1154		ERJ6GEYJ103	M.RESISTOR CH 1/10W 10K	1	
R1155		ERJ6GEYJ101	M.RESISTOR CH 1/10W 100	1	
R1157		ERJ6GEYJ102	M.RESISTOR CH 1/10W 1K	1	
R1158		ERJ6GEYJ103	M.RESISTOR CH 1/10W 10K	1	
R1159		ERJ6GEYJ821	M.RESISTOR CH 1/10W 820	1	
R1160		ERJ6GEYJ152	M.RESISTOR CH 1/10W 1.5K	1	
R1161		ERJ6GEYJ123	M.RESISTOR CH 1/10W 12K	1	
R1162		ERJ6GEYJ103	M.RESISTOR CH 1/10W 10K	1	
R1163		ERJ6GEYJ102	M.RESISTOR CH 1/10W 1K	1	
RY1100		VSY1033	RELAY	1	
RY1101		VSQ0796		1	
T1020		VLT0709		1	

Ref.No.		Part No.	Part Name & Description	Pcs	Remarks
T1080		VLT0638	TRANSFORMER	1	
T1085		VLT0638	TRANSFORMER	1	
T1090		VLT0638	TRANSFORMER	1	
T1095		VLT0638	TRANSFORMER	1	
TP1001,02		VJR0646	TEST POINT	2	
			MISCELLANEOUS		
		VHN0011	NYLON NUT	2	
		VMC0357	SPRING	1	
		VMP3084	P.C.BOARD HOLDER ANGLE	1	
		VMX2276	SPACER	1	
		VMZ2095	BARRIER	1	
		VMZ2100	BARRIER	1	
		VMZ2175	BARRIER	1	
		VSC1068	HEAT SINK	1	
		VSC3820	HEAT SINK	1	
		VSC3821	HEAT SINK	1	
		XYN3+F10S	SCREW	5	
		XYN3+F6S	SCREW	1	
	■	VEP81068A	P.C.BOARD W/COMPONENT		
			POWER 2		
			CAPACITORS		
C1030		ECEA1HNX471	.CAPACITOR V	1	
C1031,32		ECQF6222KZ	P.CAPACITOR 630V 2200P	2	
C1040		ECEA1VNX102	.CAPACITOR V	1	
C1042		ECEA1VNX102	.CAPACITOR V	1	
C1043		ECQE1103KF	.CAPACITOR V	1	
C1050-53		ECEA1ENX102	.CAPACITOR V	4	
C1054		ECQP1471JZ	P.CAPACITOR 100V 470P	1	
C1060-63		ECA1CFZ222L	E.CAPACITOR 16V 2200U	4	
C1070		ECEA1AGE103	E.CAPACITOR 10V 10000U	1	
C1071		ECA1AFZ222	E.CAPACITOR 10V 2200U	1	
C1072		ECA1AFZ472	E.CAPACITOR 10V 4700U	1	
C1073		ECA1AFZ222	E.CAPACITOR 10V 2200U	1	
C1076		ECQP1102JZ	P.CAPACITOR 100V 1000P	1	
C1101,02		ECQE2155KF	.CAPACITOR V	2	
C1101S		VMZ2155	.CAPACITOR V	1	
C1102S		VMZ2155	.CAPACITOR V	1	
D1030		D8LC40	DIODE	1	
D1040		D8LCA20	DIODE	1	
D1050		D8LCA20	DIODE	1	
D1051		D8LCA20R	DIODE	1	
D1052		MA154WK	DIODE	1	
D1060		D10SC6M	DIODE	1	
D1061		D10SC6MR	DIODE	1	
D1070		D30SC4M	DIODE	1	
D1071		D10SC6MR	DIODE	1	
DZ1050		RD2.4ESB2		1	
DZ1060		RD2.4ESB2		1	

POWER 3 VEP81069A
AUTO OFF LED VEP80792A

Ref.No.		Part No.	Part Name & Description	Pcs	Remarks
JP5		VJP1145		1	
JP6		VJP2824A005		1	
L1030		VLQ0501	COIL	1	
L1040		VLT0310	TRANSFORMER	1	
L1042		ELC10B024	COIL H	1	
L1050		VLT0708	COIL H	1	
L1051,52		ELC10B025	COIL H	2	
L1062,63		ELC10B025	COIL H	2	
L1070		VLQ0488	COIL	1	
L1071		VLQ0298	COIL	1	
L1072		VLQ0486	COIL	1	
L1073		ELC10B025	COIL H	1	
Q1034		2SB642	TRANSISTOR	1	
Q1037		2SB642	TRANSISTOR	1	
Q1044		2SB642	TRANSISTOR	1	
Q1050		2SD1277A	TRANSISTOR	1	
Q1054		2SB642	TRANSISTOR	1	
Q1057		2SD637	TRANSISTOR	1	
Q1060		2SD1277A	TRANSISTOR	1	
Q1064		2SB642	TRANSISTOR	1	
Q1067		2SD637	TRANSISTOR	1	
Q1077		2SD637	TRANSISTOR	1	
			RESISTORS		
R1031,32		ERG2SJ220	M.RESISTOR 2W 22	2	
R1034		ERX2SZJR12	.RESISTOR W	1	
R1035,36		ERDS2TJ101	C.RESISTOR 1/4W 100	2	
R1037		ERX2SZJR12	.RESISTOR W	1	
R1038		ERDS2TJ101	C.RESISTOR 1/4W 100	1	
R1041		ERDS2TJ223	C.RESISTOR 1/4W 22K	1	
R1042		ERDS2TJ222	C.RESISTOR 1/4W 2.2K	1	
R1043		ERG3SJ221	M.RESISTOR 3W 220	1	
R1044		ERX3SZJR10	M.RESISTOR 3W 0.10	1	
R1045,46		ERDS2TJ101	C.RESISTOR 1/4W 100	2	
R1050		ERDS2TJ562	C.RESISTOR 1/4W 5.6K	1	
R1051		ERX2SJ4R7	M.RESISTOR 2W 4.7	1	
R1052		ERQ12HJ100	.RESISTOR W	1	
R1054		ERX3SZJR10	M.RESISTOR 3W 0.10	1	
R1055,56		ERDS2TJ101	C.RESISTOR 1/4W 100	2	
R1057		ERX3SZJR15	.RESISTOR W	1	
R1058,59		ERDS2TJ101	C.RESISTOR 1/4W 100	2	
R1060		ERDS2TJ272	C.RESISTOR 1/4W 2.7K	1	
R1061		ERX2SJ2R4	.RESISTOR W	1	
R1062		ERX2SJR47	.RESISTOR W	1	
R1064		ERX3SZJR10	M.RESISTOR 3W 0.10	1	
R1065,66		ERDS2TJ101	C.RESISTOR 1/4W 100	2	
R1067		ERX3SZJR15	.RESISTOR W	1	
R1068,69		ERDS2TJ101	C.RESISTOR 1/4W 100	2	
R1071		ERG1SJ470	M.RESISTOR 1W 47	1	
R1073		ERDS2TJ512	C.RESISTOR 1/4W 5.1K	1	
R1074		ERDS2TJ562	C.RESISTOR 1/4W 5.6K	1	
R1075		ERF5T1K39M	.RESISTOR W	1	
R1076		ERQ12HJ100	.RESISTOR W	1	
R1077		ERF5T1K68M	.RESISTOR W	1	
R1078,79		ERDS2TJ101	C.RESISTOR 1/4W 100	2	
T1002		VLT0710		1	
T1003		VLT0712		1	
T1004		VLT0711		1	
VR1040		VRV0064B501	V.RESISTOR 500	1	
VR1070		VRV0064B202	V.RESISTOR 2K	1	

Ref.No.		Part No.	Part Name & Description	Pcs	Remarks
			MISCELLANEOUS		
		VMP3083	P.C.BOARD HOLDER ANGLE	10	
		VMZ2104	BARRIER	1	
		VSC3822	HEAT SINK	1	
		XYN3+F6S	SCREW	13	
	■	VEP81069A	P.C.BOARD W/COMPONENT		
			POWER 3		
			CAPACITORS		
C1001,02		ECQU2A224MN	P.CAPACITOR 250V 0.22U	2	
C1003,04		ECKDNS222ME	.CAPACITOR V	2	
C1006,07		ECKDNS471MB	.CAPACITOR V	2	
CS1001,02		VMZ1798		2	
CS1003,04		VMZ0965		2	
CS1006,07		VMZ0965		2	
L1001		VLQ0499	COIL	1	
1002	V	LQ0500		1	
S1001	V	MZ1799		1	
S1002	V	MZ1810		1	
			RESISTORS		
R1001		ERC12AGM334	S.RESISTOR 1/2W 330K	1	
	■	VEP80792A	P.C.BOARD W/COMPONENT		
			AUTO OFF LED		
D1		LN38GP	DIODE	1	
D2		VLL0029	LED	1	
P1		VJP1602T	CONNECTOR (MALE) 9P	1	
P2		VJP1596T	CONNECTOR (MALE) 3P	1	
P3		VJP1598T	CONNECTOR (MALE) 5P	1	
			RESISTORS		

EJECT VEP80790A　　HP JACK VEP86131A　　FR VR VEP86132A
ERR LED VEP80804A　　HP VR VEP86130A　　FR CPU VEP86126A　　CPU SUB VEP86129A

Ref.No.		Part No.	Part Name & Description	Pcs	Remarks
R1,R2		ERDS2TJ221	C.RESISTOR 1/4W 220	2	
	■	VEP80790A	P.C.BOARD W/COMPONENT		
			EJECT		
P1		VJP1596T	CONNECTOR (MALE) 3P	1	
SW1		VSP0543		1	
	■	VEP80804A	P.C.BOARD W/COMPONENT		
			ERR LED		
D1		LN38GP	DIODE	1	
D2		LN48YP	DIODE	1	
D3,D4		LN28RP	DIODE	2	
P1		VJP1598T	CONNECTOR (MALE) 5P	1	
			RESISTORS		
R1-R4		ERDS2TJ221	C.RESISTOR 1/4W 220	4	
	■	VEP86131A	P.C.BOARD W/COMPONENT		
			HP JACK		
	■	VEP86130A	P.C.BOARD W/COMPONENT		FOR VEP86131A
			HP VR		
J1		VJJ0150	HEADPHONE JACK	1	
P1		VJP1232T	CONNECTOR (MALE) 5P	1	
	■	VEP86132A	P.C.BOARD W/COMPONENT		
			FR VR		

Ref.No.		Part No.	Part Name & Description	Pcs	Remarks
			CAPACITORS		
C1		ECKF1H103ZF	C.CAPACITOR 50V 0.01U	1	
C2		ECA1CXK101F	.CAPACITOR V	1	
C3		ECKF1H103ZF	C.CAPACITOR 50V 0.01U	1	
C4		ECA1CXK101F	.CAPACITOR V	1	
IC1-C3		NJM2904D	IC	3	
L1,L2		VLQEL05F101J	COIL 100UH	2	
P1		VJP3440A016	CONNECTOR	1	
VR1-R6		EVU023003B14	V.RESISTOR W	6	
	■	VEP86126A	P.C.BOARD W/COMPONENT		
			FR CPU		
	■	VEP86129A	P.C.BOARD W/COMPONENT		FOR VEP86126A
			CPU SUB		
B1		VSQ0558	BUZZER	1	
			CAPACITORS		
C1		ECA1HXS2R2	.CAPACITOR V	1	#C
C2		ECUM1H103ZFN	C.CAPACITOR CH 50V 0.01U	1	
C3,C4		ECUM1H220JCN	C.CAPACITOR CH 50V 22P	2	
C5		ECUM1H103ZFN	C.CAPACITOR CH 50V 0.01U	1	
C6		ECA1VXK470F	.CAPACITOR V	1	#C
C7		ECA1CXK101F	.CAPACITOR V	1	
C8		ECA1AXS680	E.CAPACITOR 10V 68U	1	
C9		ECA1CXK101F	.CAPACITOR V	1	
C10		ECA1CXS100	.CAPACITOR V	1	#C
C11		ECUM1E104KBN	C.CAPACITOR 25V 0.1U	1	
C12		ECUM1H103ZFN	C.CAPACITOR CH 50V 0.01U	1	
C13		ECA1CXS100	.CAPACITOR V	1	#C
C14-22		ECA1CXK101F	.CAPACITOR V	9	
C23,24		ECUM1E104KBN	C.CAPACITOR 25V 0.1U	2	
C25-30		ECUM1H103ZFN	C.CAPACITOR CH 50V 0.01U	6	
C31		ECUM1H102KBN	C.CAPACITOR CH 50V 1000P	1	
C32-36		ECUM1H103ZFN	C.CAPACITOR CH 50V 0.01U	5	
C37,38		ECA1CXK101F	.CAPACITOR V	2	
C39,40		ECUM1H103ZFN	C.CAPACITOR CH 50V 0.01U	2	
C41,42		ECUM1H121JCN	C.CAPACITOR CH 50V 120P	2	
C43		ECUM1H103ZFN	C.CAPACITOR CH 50V 0.01U	1	
C44		ECUM1E104KBN	C.CAPACITOR 25V 0.1U	1	
C45		ECUM1H121JCN	C.CAPACITOR CH 50V 120P	1	
D1-D3		MA151K	DIODE	3	

Ref.No.		Part No.	Part Name & Description	Pcs	Remarks
FL1-L4		VLF0576	FILTER	4	
IC1		HD64180ZP8	IC	1	
IC2		VSI1322	IC	1	#IC
IC3		MN4464S08L	IC	1	
IC4		MB8421-90LPF	IC	1	
IC5		MB89363BPF	IC	1	
IC6		TL7705CPSB	IC	1	
IC7		MC74HC138AF	IC	1	
IC8		MC74HC139AF	IC	1	
IC9		MC74HC138AF	IC	1	
IC10		MC74HC32AF	IC	1	
IC11		MC74HC4050F	IC	1	
IC12		MC74HC32AF	IC	1	
IC13		MC74HC08AF	IC	1	
IC14		MC74HC04AF	IC	1	
IC15		UPD71054GB	IC	1	
IC16		AM26LS32M	IC	1	#IC
IC17		AM26LS31M	IC	1	#IC
IC18-20		MC74HC74AF	IC	3	
IC21,22		MC74HC4040F	IC	2	
IC23-25		MC74HC244AF	IC	3	
IC26		MC74HC165F	IC	1	
IC27		MC14094BF	IC	1	
IC28		MC74HC164F	IC	1	
IC29		MC74HC04AF	IC	1	
IC30		MC74HC02AF	IC	1	
IC31		MC74HC04AF	IC	1	
IC32		MC74HC11F	IC	1	
IC34,35		MC14516BF		2	
IC36		MC14015BF	IC	1	
IC37,38		MC74HC74AF	IC	2	
IC39-41		DG508ACWE	IC	3	
IC43,44		MC74HC161F	IC	2	
IC45		AK5326	IC	1	
IC46,47		MC74HC595AF	IC	2	
IC48		NJM78L05UA	IC	1	
IC49		NJM79L05UA	IC	1	
IC50		MC74HC04AF	IC	1	
IC51-54		NJM2904M	IC	4	
IC55		MC74HC27F	IC	1	
IC56,57		NJM78L05UA	IC	2	
IC58		MB89363BPF	IC	1	
IC59		MC14013BF	IC	1	
ICS1		VJS3111	CONNECTOR (FEMALE)	1	
ICS2		VJS2336A028	CONNECTOR (FEMALE)	1	
L1-L3		VLQEL05S101J	COIL 100UH	3	
L4-L9		VLQ0576	COIL	6	
L10-15		VLQ0576	COIL	6	
P1		VJP3418A032	CONNECTOR	1	#P
P2		VJS2698A028	CONNECTOR	1	#P
P3		VJP1232T	CONNECTOR (MALE) 5P	1	
P4		VJP1230T	CONNECTOR (MALE) 3P	1	
P5		VJS2698A028	CONNECTOR	1	#P
P6,P7		VJP3440A016	CONNECTOR	2	#P
P8		VJP1145		1	
PC1-C9		ECUM1H103ZFN	C.CAPACITOR CH 50V 0.01U	9	
PC10-39		ECUM1H103ZFN	C.CAPACITOR CH 50V 0.01U	30	

Ref.No.		Part No.	Part Name & Description	Pcs	Remarks
Q1		2SD601-R	TRANSISTOR CHIP	1	(R)
Q2		UN2212	TRANSISTOR-RESISTOR	1	
Q3-Q5		UN2214	TRANSISTOR-RESISTOR	3	
Q6		2SD946A	TRANSISTOR	1	
Q7-Q9		2SD601-R	TRANSISTOR CHIP	3	(R)
Q10		2SD601-R	TRANSISTOR CHIP	1	(R)
			RESISTORS		
R1-R9		ERJ6GEYJ104	M.RESISTOR CH 1/10W 100K	9	
R10-29		ERJ6GEYJ104	M.RESISTOR CH 1/10W 100K	20	
R30		ERJ6GEYJ562	M.RESISTOR CH 1/10W 5.6K	1	
R31		ERJ6GEYJ103	M.RESISTOR CH 1/10W 10K	1	
R32		ERJ6GEYJ562	M.RESISTOR CH 1/10W 5.6K	1	
R33		ERJ6GEYJ222	M.RESISTOR CH 1/10W 2.2K	1	
R34		ERJ6GEYJ474	M.RESISTOR CH 1/10W 470K	1	
R35-40		ERJ6GEYJ472	M.RESISTOR CH 1/10W 4.7K	6	
R41		ERJ6GEYJ331	M.RESISTOR CH 1/10W 330	1	
R42		ERJ6GEYJ681	M.RESISTOR CH 1/10W 680	1	
R43		ERJ6GEYJ331	M.RESISTOR CH 1/10W 330	1	
R44		ERJ6GEYJ681	M.RESISTOR CH 1/10W 680	1	
R45		ERJ6GEYJ331	M.RESISTOR CH 1/10W 330	1	
R46		ERJ6GEYJ681	M.RESISTOR CH 1/10W 680	1	
R47		ERJ6GEYJ331	M.RESISTOR CH 1/10W 330	1	
R48		ERJ6GEYJ681	M.RESISTOR CH 1/10W 680	1	
R49		ERJ6GEYJ331	M.RESISTOR CH 1/10W 330	1	
R50		ERJ6GEYJ681	M.RESISTOR CH 1/10W 680	1	
R51		ERJ6GEYJ331	M.RESISTOR CH 1/10W 330	1	
R52		ERJ6GEYJ681	M.RESISTOR CH 1/10W 680	1	
R53		ERJ6GEYJ331	M.RESISTOR CH 1/10W 330	1	
R54		ERJ6GEYJ681	M.RESISTOR CH 1/10W 680	1	
R55		ERJ6GEYJ331	M.RESISTOR CH 1/10W 330	1	
R56		ERJ6GEYJ681	M.RESISTOR CH 1/10W 680	1	
R57		ERJ6GEYJ122	M.RESISTOR CH 1/10W 1.2K	1	
R58		ERJ6GEYJ222	M.RESISTOR CH 1/10W 2.2K	1	
R59		ERJ6GEYJ223	M.RESISTOR CH 1/10W 22K	1	
R60		ERJ6GEYJ303	.RESISTOR W	1	
R61		ERJ6GEYJ105	M.RESISTOR CH 1/10W 1M	1	
R62		ERJ6GEYJ123	M.RESISTOR CH 1/10W 12K	1	
R63		ERJ6GEYJ473	M.RESISTOR CH 1/10W 47K	1	
R64-66		ERJ6GEYJ333	M.RESISTOR CH 1/10W 33K	3	
R67		ERJ6GEYJ104	M.RESISTOR CH 1/10W 100K	1	
R68		ERJ6GEYJ153	M.RESISTOR CH 1/10W 15K	1	
R69		ERJ6GEYJ103	M.RESISTOR CH 1/10W 10K	1	
R70		ERJ6GEYJ100	M.RESISTOR CH 1/10W 10	1	
R71		ERJ6GEYJ510	.RESISTOR W	1	
R72		ERJ6GEYJ471	M.RESISTOR CH 1/10W 470	1	
R73		ERJ6GEYJ331	M.RESISTOR CH 1/10W 330	1	
R75		ERJ6GEYJ331	M.RESISTOR CH 1/10W 330	1	
R77		ERJ6GEYJ331	M.RESISTOR CH 1/10W 330	1	
R79		ERJ6GEYJ331	M.RESISTOR CH 1/10W 330	1	
R89-99		ERJ6GEYJ103	M.RESISTOR CH 1/10W 10K	11	
R100-09		ERJ6GEYJ103	M.RESISTOR CH 1/10W 10K	10	
R110-12		ERJ6GEYJ562	M.RESISTOR CH 1/10W 5.6K	3	
R113,14		ERJ6GEYJ103	M.RESISTOR CH 1/10W 10K	2	
R115-20		ERJ6GEY0R00	M.RESISTOR CH 1/10W 0	6	
SW1		VSS0186	SWITCH	1	
SW2		VSS0187	SWITCH	1	
SW3,W4		VSS0186	SWITCH	2	
SW5-W7		VSP0482	SWITCH	3	
VR1		EVUE3AS01B53	V.RESISTOR W	1	#VR
VR2		VRV0109B502	V.RESISTOR 5K	1	
VR3		EVUE3AS01B53	V.RESISTOR W	1	#VR
VR4-R8		EVUESAEA6B53	V.RESISTOR W	5	#VR
X1		VSX0150	CRYSTAL OSCILLATOR	1	

FR SW VEP86127A

Ref.No.		Part No.	Part Name & Description	Pcs	Remarks
	■	VEP86127A	P.C.BOARD W/COMPONENT		
			FR SW		
			CAPACITORS		
C2		ECQB1H332JF	.CAPACITOR V	1	
C3		ECUM1H104ZFN	C.CAPACITOR CH 50V 0.1U	1	
C5		ECA1HXS100	.CAPACITOR V	1	
C6,C7		ECA1CM101F	.CAPACITOR V	2	
C8		ECUM1H472KBN	C.CAPACITOR CH 50V 4700P	1	
C9		ECUM1H104ZFN	C.CAPACITOR CH 50V 0.1U	1	
C10-20		ECUM1H104ZFN	C.CAPACITOR CH 50V 0.1U	11	
D1,2		MA151WK	DIODE	2	
D6-D9		MA151WK	DIODE	4	
D10-16		MA151WK	DIODE	7	
D17,18		LN38GP	DIODE	2	
D19-22		LN48YP	DIODE	4	
D23		LN240CP	DIODE	1	
D24		LN340GCPGLS	DIODE	1	
D25		LN240CP	DIODE	1	
D26		LN340GCPGLS	DIODE	1	
D27		LN240CP	DIODE	1	
D28		LN340GCPGLS	DIODE	1	
D29		MA151K	DIODE	1	
D30		MA4091M	DIODE	1	
D31		MA4330M	DIODE	1	
D32		MA166	DIODE	1	
D40,41		LN38GP	DIODE	2	
D42		LN28RP	DIODE	1	
D50-D61		MA151K	DIODE	12	
IC1-C3		MC74HC574AF	IC	3	
IC4		TMP82C79F2	IC	1	
IC5,C6		MC74HC574AF	IC	2	
IC7,C8		MC74HC138AF	IC	2	
IC9		MC74HC04AF	IC	1	
IC10		TMP82C55AF2	IC	1	
IC11,12		AN6873N	IC	2	
IC13		VSL0081	DISPLAY TUBE	1	
L2		VLQ0197	COIL	1	
LH17-22		VMX1858		6	
LH40-42		VMX1858		3	
P1		VJS2582B028	CONNECTOR	1	
Q1-Q9		2SD601-R	TRANSISTOR CHIP	9	(R)
Q10-31		2SD601-R	TRANSISTOR CHIP	22	(R)
Q32		2SD973-S	TRANSISTOR	1	
Q33-35		2SD601-R	TRANSISTOR CHIP	3	(R)
Q40-42		2SD601-R	TRANSISTOR CHIP	3	(R)

Ref.No.		Part No.	Part Name & Description	Pcs	Remarks
			RESISTORS		
R1-R9		ERJ6GEYJ331	M.RESISTOR CH 1/10W 330	9	
R10-16		ERJ6GEYJ331	M.RESISTOR CH 1/10W 330	7	
R17-24		ERJ6GEYJ682	M.RESISTOR CH 1/10W 6.8K	8	
R25-32		ERJ6GEYJ222	M.RESISTOR CH 1/10W 2.2K	8	
R33-38		ERJ6GEYJ331	M.RESISTOR CH 1/10W 330	6	
R39-41		ERJ6GEYJ682	M.RESISTOR CH 1/10W 6.8K	3	
R42-44		ERJ6GEYJ222	M.RESISTOR CH 1/10W 2.2K	3	
R45-60		ERJ6GEYJ331	M.RESISTOR CH 1/10W 330	16	
R61-68		ERJ6GEYJ682	M.RESISTOR CH 1/10W 6.8K	8	
R69-76		ERJ6GEYJ222	M.RESISTOR CH 1/10W 2.2K	8	
R77-84		ERJ6GEYJ331	M.RESISTOR CH 1/10W 330	8	
R85-88		ERJ6GEYJ682	M.RESISTOR CH 1/10W 6.8K	4	
R89-92		ERJ6GEYJ222	M.RESISTOR CH 1/10W 2.2K	4	
R93-96		ERJ6GEYJ331	M.RESISTOR CH 1/10W 330	4	
R97-99		ERJ6GEYJ271	M.RESISTOR CH 1/10W 270	3	
R100-08		ERJ6GEYJ271	M.RESISTOR CH 1/10W 270	9	
R109-16		ERJ6GEYJ682	M.RESISTOR CH 1/10W 6.8K	8	
R117-24		ERJ6GEYJ222	M.RESISTOR CH 1/10W 2.2K	8	
R125		ERJ6GEYJ472	M.RESISTOR CH 1/10W 4.7K	1	
R126		ERJ6GEYJ104	M.RESISTOR CH 1/10W 100K	1	
R127		ERJ6GEYJ223	M.RESISTOR CH 1/10W 22K	1	
R130-35		ERJ6GEYJ331	M.RESISTOR CH 1/10W 330	6	
R136		ERJ6GEYJ222	M.RESISTOR CH 1/10W 2.2K	1	
R137		ERJ6GEYJ682	M.RESISTOR CH 1/10W 6.8K	1	
R138		ERJ6GEYJ222	M.RESISTOR CH 1/10W 2.2K	1	
R139		ERJ6GEYJ682	M.RESISTOR CH 1/10W 6.8K	1	
R140		ERJ6GEYJ222	M.RESISTOR CH 1/10W 2.2K	1	
R141		ERJ6GEYJ682	M.RESISTOR CH 1/10W 6.8K	1	
R150		ERJ6GEYJ222	M.RESISTOR CH 1/10W 2.2K	1	
R151		ERJ6GEYJ682	M.RESISTOR CH 1/10W 6.8K	1	
R152,53		ERJ6GEYJ331	M.RESISTOR CH 1/10W 330	2	
R154		ERJ6GEYJ222	M.RESISTOR CH 1/10W 2.2K	1	
R155		ERJ6GEYJ682	M.RESISTOR CH 1/10W 6.8K	1	
R156,57		ERJ6GEYJ331	M.RESISTOR CH 1/10W 330	2	
R158		ERJ6GEYJ222	M.RESISTOR CH 1/10W 2.2K	1	
R159		ERJ6GEYJ682	M.RESISTOR CH 1/10W 6.8K	1	
R160,61		ERJ6GEYJ331	M.RESISTOR CH 1/10W 330	2	
SW1		VSP0753605	SWITCH	1	
SW2		VSP0753607	SWITCH	1	
SW3		VSP0753609	SWITCH	1	
SW4		VSP0753611	SWITCH	1	
SW5		VSP0753606	SWITCH	1	
SW6		VSP0753608	SWITCH	1	
SW7		VSP0753610	SWITCH	1	
SW8		VSP0753612	SWITCH	1	
SW9		VSP0544	SWITCH	1	
SW10		VSP0753603	SWITCH	1	
SW11		VSP0753604	SWITCH	1	
SW12		VSP0599	SWITCH	1	
SW13		VSP0752601	SWITCH	1	
SW14		VSP0752602	SWITCH	1	
SW15		VSP0551	SWITCH	1	
SW16		VSP0549	SWITCH	1	
SW17		VSP0552	SWITCH	1	
SW18		VSP0545	SWITCH	1	
SW19		VSP0542	SWITCH	1	
SW20		VSP0546	SWITCH	1	
SW21		VSP0548	SWITCH	1	
SW22		VSP0547	SWITCH	1	
SW23		VSS0324	SWITCH	1	
SW24,25		VSS0321	SWITCH	2	
SW26		VSS0324	SWITCH	1	
SW27		VSS0321	SWITCH	1	
SW28-31		EVQQJ104K	SWITCH	4	
T1		VLT0275	TRANSFORMER	1	

FR LED VEP86128A
S EXTENSION VFK0882

Ref.No.		Part No.	Part Name & Description	Pcs	Remarks
			MISCELLANEOUS		
		VHN0059	NYLON NUT	5	
		VJF0516	HOLDER	2	
	■	VEP86128A	P.C.BOARD W/COMPONENT		
			FR LED		
			CAPACITORS		
C2-C5		ECUM1H104ZFN	C.CAPACITOR CH 50V 0.1U	4	
C7		ECUM1H104ZFN	C.CAPACITOR CH 50V 0.1U	1	
D1-D9		HDSP4850S02	DIODE	9	
D10-12		HDSP4850S02	DIODE	3	
D13-22		LN48YP	DIODE	10	
D23-26		HLMP-2300	DIODE	4	
IC1		BA6256	IC	1	
IC2-C4		BA618	IC	3	
IC5		SN74HC238NS	IC	1	
P1		VJS2582B028	CONNECTOR	1	
Q1		UN2216	TRANSISTOR-RESISTOR	1	
			RESISTORS		
R1-R21		ERJ6GEYJ101	M.RESISTOR CH 1/10W 100	21	
			MISCELLANEOUS		
		VMX1223	SPACER	1	
		VFK0882	P.C.BOARD W/COMPONENT		
			S EXTENSION		
			MISCELLANEOUS		
		VJP3151	CONNECTOR (MALE)	2	
		VJR0646	PIN	165	
		VJS3151	CONNECTOR (FEMALE)	2	
		XNG26BFZ	NUT	8	

M EXTENSION VFK0883

Ref.No.		Part No.	Part Name & Description	Pcs	Remarks
		XYN26+C12FZ	SCREW	8	
		VFK0883	P.C.BOARD W/COMPONENT		
			M EXTENSION		
			MISCELLANEOUS		
		VJP3151	CONNECTOR (MALE)	2	
		VJR0646	PIN	165	
		VJS3151	CONNECTOR (FEMALE)	2	
		VMP2602	P.C.BOARD HOLDER ANGLE	1	
		VMP2603	P.C.BOARD HOLDER ANGLE	1	
		XNG26BFZ	NUT	8	
		XYN26+C12FZ	SCREW	8	
		XYN3+F6FZS	SCREW	4	

MECHANICAL REPLACEMENT PARTS LIST
MECHANICAL COMPONENT ASSEMBLY (1)

Ref.No.		Part No.	Part Name & Description	Pcs	Remarks
1		VXA2271	UPPER FRANCE	2	
2		VXP0619	POST ROLLER	4	
3		VMS2800	LOWER FRANCE	2	
4		VMB1379	POST SPRING	2	
5		VED0201	A/C HEAD U	1	
5-1		VMX1441	ADJ. COLLAR	2	
5-2		VMB1843	ADJ. SPRING	2	
5-3		VXA5026	A/C HEAD MOUNT PLATE	1	
5-4		VMD1579	A/C HEAD BASE	1	
5-5		VBR0188	A/C HEAD	1	
5-6		VBR0189	MONITOR HEAD	1	
5-7		VHD0797	SCREW	1	
10		VMB2147	A/C HEAD SPRING	1	
11		VMA8463	TENSION P.C.B. BRACKET	1	
12		VMS3712	UPPER FRANCE	2	
13		VXA2272	LOWER FRANCE	2	
14		VXP1422	LOADING RING UNIT	1	
14-1		VMS3638	P7 UPPER FRANCE	3	
14-2		VXP0821	POST ROLLER	3	
14-3		VMS2803	P7 LOWER FRANCE	3	
14-4		VMB1377	P8 POST SPRING	4	
14-5		VXL2106	PINCH ROLLER ARM U	1	
14-6		VMB2301	PINCH ARM REST SPRING	1	
14-7		VMS4617	P8 UPPER FRANCE	1	
14-8		VXP1294	P8 ROLLER	1	
14-9		VMS4620	P8 LOWER FRANCE	1	
14-10		VXL2105	M LOADING ARM UNIT	1	
14-11		VMB2299	LOADING ARM RESET SPRING	1	
14-12		VXP1421	LOADING RING	1	
14-13		VXL2317	T. BUFFER ARM U	1	
14-14		VMB2607	T. BUFFER SPRING	1	
14-15		VHD0789	SCREW	4	
15		VMB2341	POST SPRING	2	
16		VDP1010	RING ROLLER	4	
17		VMX1297	RING ROLLER COLLAR	2	
18		VXR0215	RING ROLLER UNIT	1	
18-1		VDP1010	RING ROLLER	2	
18-2		VMX1995	RING ROLLER COLLAR B	1	
18-3		VXA4483	RING ROLLER (1) U	1	
19		VMD1730	CABLE HOLDER	2	
20		VXA4406	WORM BASE (1) U	1	
20-1		VMA8377	WORM BASE	1	
20-2		VEM0397	WORM MOTOR U	1	
20-3		VDV0231	TIMING BELT	1	
23		VXP0940	CAPSTAN MOTOR UNIT	1	
24		VSC2066	CAPSTAN MOTOR COVER	1	
25		VXD0110	CAPSTAN HOUSING UNIT	1	
26		VEK3699	CAPSTAN STATOR P.C.B. U	1	
27		VEG1058	DRUM UNIT	1	
27-1		VXS0016	BRUSH UNIT	1	
27-2		VEH0617	CENTER DRUM U	1	
27-3		VXS0017	EARTH RING U	1	
27-5		VMD1760	MOTOR COVER	1	
27-6		VMD1755	INTERLOCKING BLOCK	1	
27-7		VMD1758	INTERLOCKING ARM	1	
27-8		VMA8452	STEPPING PLATE (1)	2	
27-9		VEK2372	DEW SENSOR U	1	
27-10		VAG0273	TAPE GUIDE	1	
27-11		VJR3	CLAMPER	2	
28		VXA4417	CLEANER UNIT	1	
28-1		VSJ0096	CLEANER SOLENOID	1	
28-2		VXP1326	CLEANER ROLLER UNIT	1	
29		VHD0798	SCREW	4	
51		XNG4ES	NUT	1	
52		XSN26+12F	SCREW	2	
53		XTV26+6F	SCREW	4	
54		XTV3+6F	SCREW	20	
55		XTV3+6FFZ	SCREW	1	
56		XTV3+8F	SCREW	6	
57		XYN2+C10S	SCREW	3	
58		XYN2+C6V	SCREW	3	

Ref.No.		Part No.	Part Name & Description	Pcs	Remarks
59		XYN26+C7V	SCREW	3	
60		XVE26B6FP	SCREW	2	
61		XYN3+F18	SCREW	2	
62		XYN3+F6	SCREW	4	
63		XYNV26+K4S	SCREW	2	
64		XYNV3+K10S	SCREW	3	
65		XYN4+C10S	SCREW	3	
66		XWA26B	SPRING WASHER	2	
67		XUC25FP	E-RING	4	
68		XUC3FP	E-RING	3	
69		XWE4	WASHER	3	
70		XWG26	WASHER	4	
71		XWE4	WASHER	1	
72		XWGV3D6G	WASHER	4	
73		XWGV3Y6G	WASHER	2	
74		XWGV4D7G	WASHER	4	
75		XWGV4F9G	WASHER	1	
76		XWGV4Y7G	WASHER	4	
77		XYN2+C3	SCREW	1	
78		XYN2+J10	SCREW	2	
79		XYN26+C4	SCREW	4	
80		XYN26+C6	SCREW	1	
81		XYN3+A10BWS	SCREW	2	
82		XYN3+F14	SCREW	2	
83		XYN3+J5	SCREW	2	
84		XYN3+J8	SCREW	2	
85		XVE3414FP	SCREW	2	
86		XVE3A6FP	SCREW	1	
87		XWE3	WASHER	4	
88		XVE26B12FP	HEX SCREW	2	
89		XXE3A8FP	SCREW	1	
90		XVE26B6FP	HEX SCREW	2	
91		XXE3A8FP	HEX SCREW	3	

MECHANICAL COMPONENT ASSEMBLY (1)

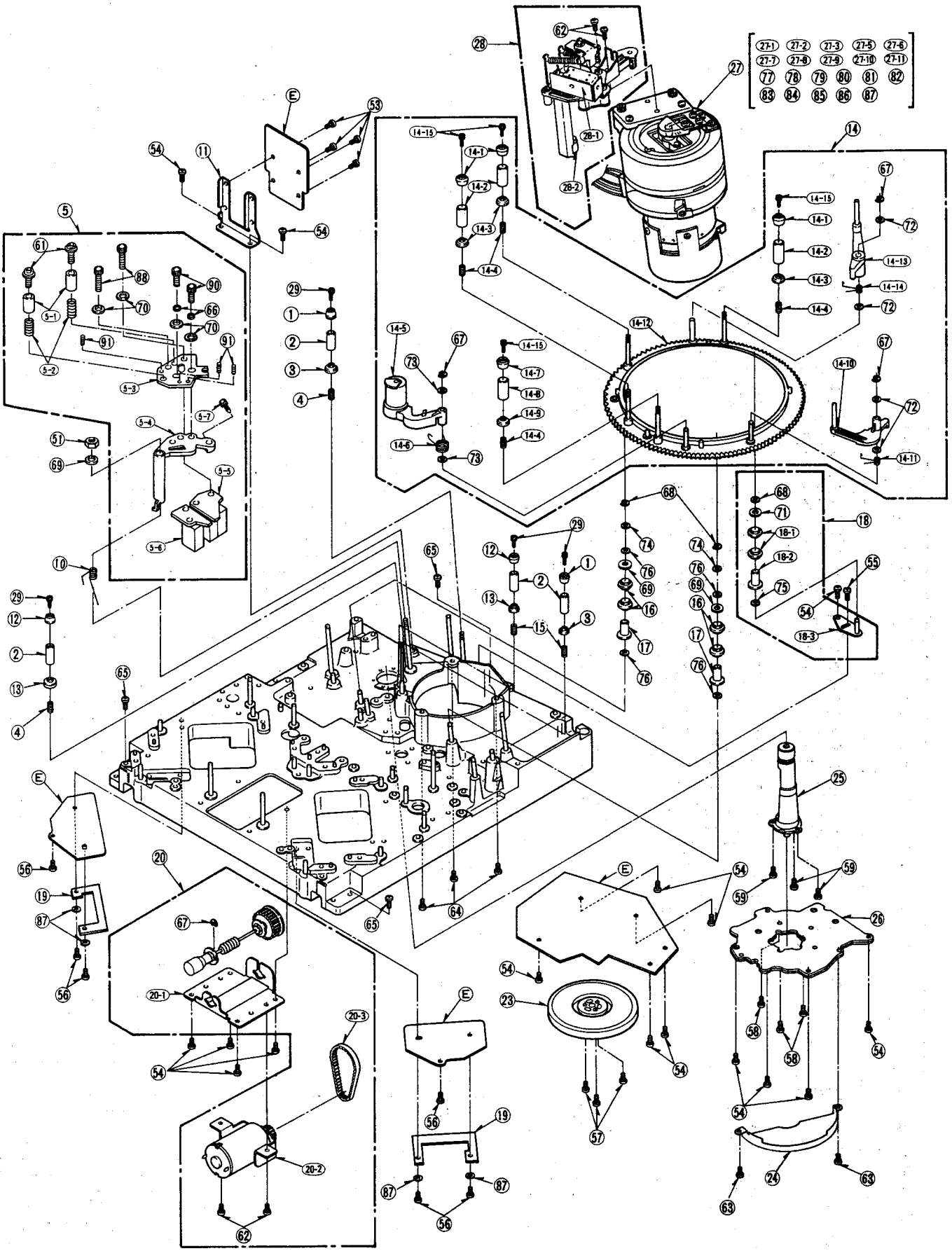

MECHANICAL COMPONENT ASSEMBLY (2)

Ref.No.		Part No.	Part Name & Description	Pcs	Remarks
1		VEK5416	S.BRAKE SOLENOID U.	1	
1-1		VSJ0100	BRAKE SOLENOID	1	<R23>
1-2		VMA8410	S SOLENOID BRACKET	1	
3		VMX2006	WASHER	2	
4		VXR0216	REEL TABLE	2	<R10,R11>
5		VXL2116	SUPPLY BRAKE U.	1	
5-1		VMB2308	BRAKE SPRING (2)	2	
5-2		VXL2119	BRAKE SHOE U.	2	<R21,R22>
5-3		VXL2118	S BRAKE ARM (2) U.	1	
5-4		VMB2300	BRAKE SPRING (1)	2	
5-5		VXL2117	S BRAKE ARM (1) UNIT	1	
10		VMA8416	S BRAKE INTERLOCKING ANGLE	1	
11		VMX0603	CASSETTE SUPPORTER	2	
12		VMB1377	P8 POST SPRING	2	
13		VBK0058	MR SENSOR	2	
14		VMA8415	MR SPACER	2	
15		VXA4409	S REEL BASE (1) U.	1	
16		VMD1707	DET BIT CAP (T)	2	
17		VXJ0096	DET BIT PIN U.	5	
18		VMB2280	DET BIT SPRING	5	
19		VMD1705	DET BIT HOLDER (T)	2	
20		VJF0620	CLAMPER	2	
21		VMA8375	PHOTO DET BASE	1	
22		VXL2120	TAKE UP BRAKE U.	1	
22-1		VMB2308	BRAKE SPRING	2	
22-2		VXL2119	BRAKE SHOE U.	1	
22-3		VXL2098	T BRAKE ARM (2) U.	1	
22-4		VMB2300	BRAKE SPRING	1	
22-5		VXL2121	T BRAKE ARM (1) U.	1	
24		VMA8417	T BRAKE INTERLOCKING ANGLE	1	
25		VEK5417	T.BRAKE SOLENOID U.	1	
25-1		VSJ0100	BRAKE SOLENOID	1	<R24>
25-2		VMA8409	T SOLENOID BRACKET	1	
26		VXA4412	T REEL BASE (1) U.	1	
27		VMS4633	RAIL B	2	
28		VMS4632	RAIL A	2	
29		VMA8449	RAIL HOLDER A	4	
30		VMA8450	RAIL HOLDER B	4	
31		VMZ1770	INSULATION SHEET	2	
32		VMD1786	CABLE HOLDER	2	
33		VMB2311	LC STOPPER SPRING (R)	1	
34		VXA4414	LC STOPPER (R) UNIT	1	
35		VMS3983	SELECT GUIDE SHAFT	2	
36		VMA8420	LC STOPPER HOLDER	2	
37		VXA4416	LC STOPPER (L) U.	1	
38		VMB2312	LC STOPPER SPRING (L)	1	
39		VXL2099	LC STOPPER DRIVE LEVER	1	
40		VXA4390	LC STOPPER BASE	1	
41		VMA8419	SOLENOID HOLDER	1	
42		VSJ0102	LC STOPPER SOLENOID	1	<R36>
43		VDG0757	REEL BASE DRIVE GEAR	2	
44		VMB2310	CHARGE SPRING	2	
45		VDG0756	REEL BASE DRIVE WHEEL GEAR	2	
46		VMD1707	DET BIT CAP (R)	1	
47		VMD1705	DET BIT HOLDER	1	
48		VMD1703	DETECTION BIT BASE	1	
49		VMD1704	LIGHT HOUSE CAP		
71		XQN2+AJ5	SCREW	6	
72		XTV26+5F	SCREW	8	
73		XTV26+8G	SCREW	4	
74		XTV3+6F	SCREW	15	
75		XTV3+8F	SCREW	5	
76		XYN2+C4	SCREW	4	
77		XYN26+F4FZ	SCREW	2	
78		XYN3+C4	SCREW	2	
79		XYNV26+K10	SCREW	4	
80		XYNV26+K5	SCREW	10	
81		XXEV3W4FPS	HEX SCREW	2	
82		XUC25FP	E-RING	8	
83		XUC2FP	E-RING	4	
84		XWG4	WASHER	2	

Ref.No.		Part No.	Part Name & Description	Pcs	Remarks
85		XWGV3D6G	WASHER	6	
86		XWGV3Y6G	WASHER	2	
87		XWGV3Y8G	WASHER	4	
88		XWGV4D9G	WASHER	4	
89		XYN3+C6S	SCREW	4	
90		XYN26+C5	SCREW	8	

MECHANICAL COMPONENT ASSEMBLY (2)

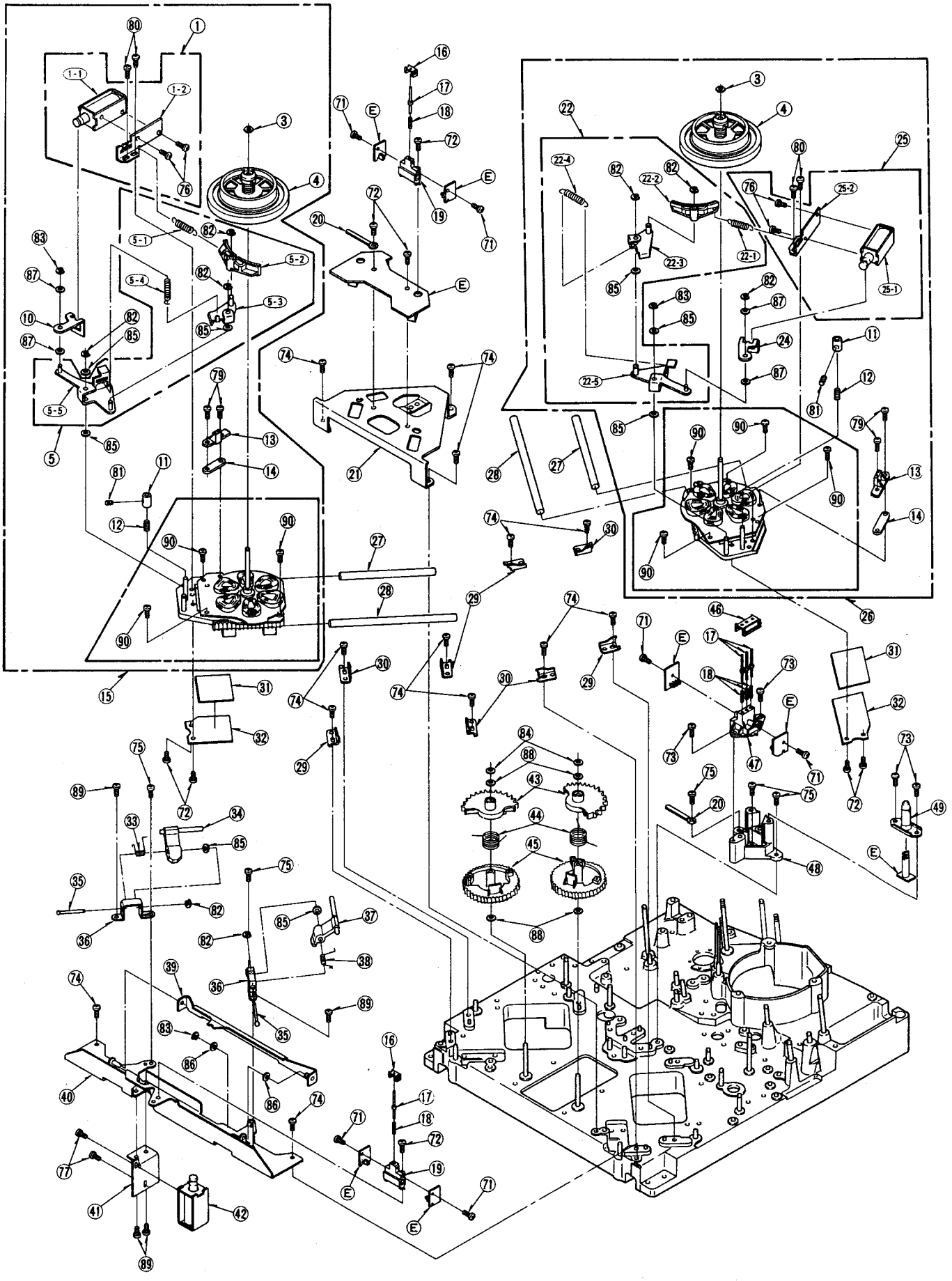

MECHANICAL COMPONENT ASSEMBLY (3)

Ref.No.	Part No.	Part Name & Description	Pcs	Remarks
1	VSJ0101	PINCH SOLENOID	1	
2	VMA8378	PINCH SOLENOID BASE	1	
3	VMA8464	PINCH LEVER ADJ. PLATE	1	
4	VXL2100	PINCH PRESS LEVER U	1	
4-1	VML1674	PINCH DRIVE ARM	1	
4-2	VMB2295	PINCH LEVEL RESET SPRING	1	
4-3	VMB1760	PINCH SPRING	1	
4-4	VMX0800	PINCH COLLAR (3)	1	
4-5	VML1675	PINCH LEVER	1	
4-6	VMX0799	PINCH COLLAR (2)	1	
5	VXA4401	MAIN LEVER U	1	
6	VMA8446	SUB LOADING BRACKET	1	
7	VMA8447	SUB UNLOADING SENSOR ANGLE	1	
8	VMX1994	PINCH SPACER	1	
9	VML2534	LOADING DETECT LEVER	1	
10	VMB2303	LOADING RESET SPRING	1	
11	VMA8448	LOADING DETECT BRACKET	1	
12	VXL2320	S TENSION ARM U	1	
12-1	VMB1378	P1 POST SPRING	1	
12-2	VXA4484	P3 UPPER FRANGE	1	
12-3	VXP0821	POST ROLLER	1	
12-4	VMS4619	P3 LOWER FRANGE	1	
12-5	VMB1376	P7 POST SPRING	1	
12-6	VMX0794	BEARING COVER	2	
12-7	VDB0779	BEARING	2	
12-10	VXL2111	P3 ARM U	1	
12-11	VXL2113	ADJUST ARM U	1	
12-12	VXL2112	P3 ARM (1) U	1	
12-13	VXA2310	MAGNET U	1	
12-14	VMS3662	P3 ARM SHAFT	1	
12-20	VXA4394	TENSION HOUSING U	1	
12-21	VMA8407	TENSION ADJ. PLATE	1	
12-22	VMC0732	LEAF SPRING	1	
12-23	VMA8181	PLATE NUT	1	
12-24	VXA4396	TENSION BASE U	1	
12-25	VMB2306	P3 CHARGE SPRING	1	
12-26	VXL2114	P3 DRIVE ARM U	1	
12-27	VMB2293	P3 ARM RESET SPRING	1	
12-28	VMX1981	P3 COLLAR	1	
12-29	VDB1120	TENSION HOUSING	1	
12-30	VXA4395	TENSION ADJ. PLATE U	1	
13	VML2532	UNLOADING DETECT LEVER	1	
14	VMB2296	UNLOADING DETECT SPRING	1	
15	VMA8465	UNLOADING DETECT BRACKET	1	
16	VEK3724	MAGNET	1	
17	VMA8444	SESOR BRACKET	1	
18	VMS3638	P7 UPPER FRANGE	2	
19	VMX1939	COLLAR A	4	
20	VXP1293	P1 ROLLER	2	
21	VMS2803	P7 LOWER FRNAGE	2	
22	VMB1376	P7 POST SPRING	2	
23	VHD0275	SCREW	4	
24	VES0625	POSITION DETECT BIT U	2	
25	VXA4400	T BASE (1) U	1	
26	VMA8429	SLANT ADJ. PLATE	1	
27	VMA8428	SLANT ADJ. BASE	1	
28	VHD0798	SCREW	2	
29	VXA4745	S BASE (1) U	1	
30	VBS0024	FULL ERASE HEAD	1	
31	VXL2115	T DRAW-OUT ARM U	1	
31-1	VXA4397	SLANT POST U	1	
31-2	VML2524	T DRAW-OUT ARM (1) U	1	
31-3	VMB2304	SLANT RESET SPRING	1	
32	VMB2302	CHARGE SPRING	1	
33	VXA4398	T DRAW-OUT ARM (1) U	1	
33-1	VMB2307	T ARM RESET SPRING	1	
34	VMX1953	P2 COLLAR	2	
35	VXL2108	P2 ARM U	1	
35-1	VMS4618	P2 UPPER FRANGE	1	
35-2	VXP0821	POST ROLLER	1	
35-3	VMS2803	P7 LOWER FRANGE	1	
35-4	VMB1376	P7 POST SPRING	1	
35-5	VXL2109	P2 ARM (1) U	1	
36	VMB2297	CHARGE SPRING	1	

Ref.No.	Part No.	Part Name & Description	Pcs	Remarks
37	VXA4393	P2 DRAW-OUT DRIVE PLATE U	1	
37-1	VMB2294	P2 ARM RESET SPRING	1	
38	VMC0217	WASHER	1	
39	VDP1071	ROLLER	3	
50	XYNV26+K5	SCREW	1	
51	XXEV26W3FP	SCREW	1	
52	XXE2D25FP	SCREW	1	
53	XXE2D2FP	SCREW	1	
54	XXE2D3FP	SCREW	1	
55	XQN2+A3FZ	SCREW	2	
56	XQN2+AJ5	SCREW	4	
57	XSN2+6	SCREW	2	
58	XTV3+8FFZ	SCREW	3	
59	XYN3+K10S	SCREW	3	
60	XTV26+5F	SCREW	8	
61	XYN3+F8FZS	SCREW	2	
62	XTV3+6F	SCREW	2	
63	XTV3+6FFZ	SCREW	10	
64	XTV3+8F	SCREW	4	
65	XYN2+C4	SCREW	3	
66	XYN2+C5	SCREW	3	
67	XYN3+F5FZ	SCREW	1	
68	XXE26A4FP	HEX SCREW	1	
69	XSB3+4FZ	SCREW	1	
70	XXE26D10FP	SCREW	1	
71	XYN3+C5S	SCREW	2	
72	XUC25FP	E-RING	6	
73	XWGV3D6G	WASHER	2	
74	XWGV3D8G	WASHER	6	
75	XWGV4F7G	WASHER	5	
76	XWGV3F6G	WASHER	2	
77	XUC3FP	E-RING	4	
78	XWGV4D7G	WASHER	3	
79	XWGV5D9G	WASHER	1	
80	XWG4	WASHER	1	
81	XWG3	WASHER	1	
82	XWGV4Y7G	WASHER	1	
83	XUC8FP	E-RING	1	
84	XWGV10Y15G	WASHER	2	
85	XWGV11D16G	WASHER	1	
86	XXE26A8FP	HEX WASHER	1	
87	XUC2FP	E-RING	1	

MECHANICAL COMPONENT ASSEMBLY (3)

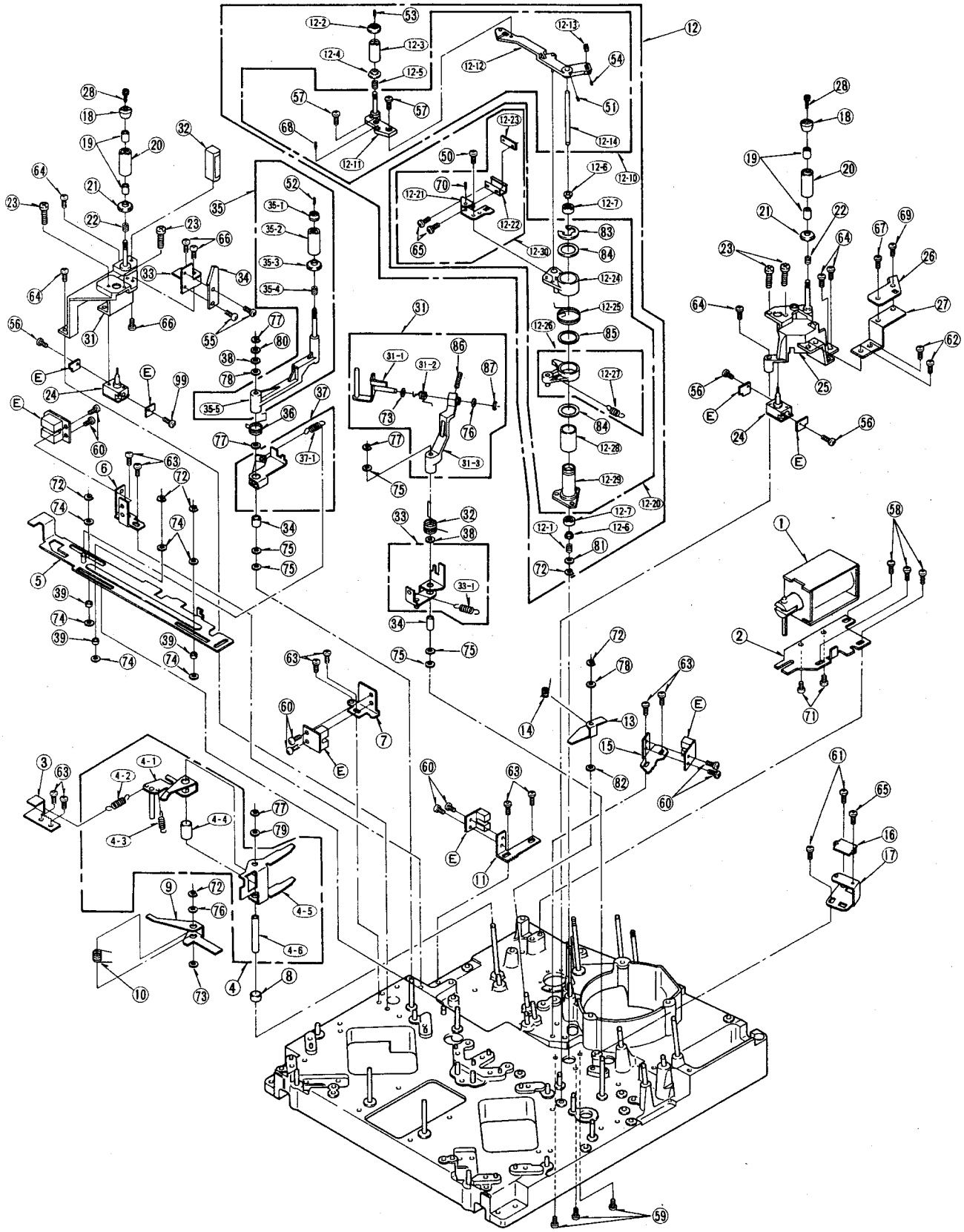

MECHANICAL COMPONENT ASSEMBLY (4)

Ref.No.		Part No.	Part Name & Description	Pcs	Remarks
1		VXA5027	A/C CLEANER 3P U	1	
1-1		VXA5028	A/C CLEANER BASE U	1	
1-2		VXL2314	CLEANER DRIVE LEVER U	1	
1-3		VXL2315	CLEANER ARM 1U	1	
1-4		VDG0888	CLEANER DRIVE CAM GEAR	1	
1-5		VDG0916	CONNECTION GEAR 1	1	
1-6		VDG0917	CONNECTION GEAR 2	1	
1-7		VXL2321	A/C CLEANER ARM U	1	
1-8		VMX2198	CLEANER CAP	3	
1-9		VMB2609	A/C CLEANER SPRING	1	
1-10		VME0367	CLEANER PAD	2	
1-11		VMX1981	P3 DRIVE ROLLER	1	
1-12		VEK5905	LOADING SENSOR U	1	
1-13		VML2785	LOADING SENSOR LEVER	1	
1-14		VMB2610	LOADING SENSOR RETURN	1	
2		VEK6431	FG SENSOR BASE U	1	
2-1		VMA8906	FG SENSOR BASE	1	
3		VDG0216	INTERMEDIATE GEAR	1	
4		VDG0215	RING DRIVE GEAR	1	
5		VMX1405	DRIVE GEAR SLEEVE A	1	
6		VMB1343	DRIVE GEAR SPRING	1	
7		VXA4402	LOADING MOTOR HOLDER	1	
8		VEM0323	LOADING MOTOR U	1	
9		VDB0371	THRUST BEARING	1	
10		VXP1419	WARM GEAR U	1	
11		VDB0899	BEARING	1	
12		VDV0156	LOADING MOTOR BELT	1	
13		VMA8379	LOADING MOTOR BRACKET	1	
14		VMD1729	PINCH GUIDE	1	
15		VMA8426	PINCH GUIDE BRACKET A	1	
16		VMA8413	PINCH GUIDE BRACKET B	1	
17		VML2518	DRIVE ANGLE	1	
18		VMB2298	SLANT CHANGE SPRING	1	
19		VXA4405	DRIVE PLATE U	1	
20		VDG0761	INTERMEDIATE GEAR	1	
21		VDG0760	CAM GEAR	1	
22		VXA4404	SLANT DRIVE ANGLE	1	
23		VMX1979	SLANT DRIVE COLLAR	1	
24		VXP1289	DRIVE GEAR U	1	
25		VDG0828	DECREASE GEAR	1	
26		VMA8374	M PHOTO SENSOR ANGLE	1	
27		VEM0454	SUB LOADING MOTOR U	1	
27-1		VXP1420	SUB WARM GEAR U	1	
27-2		VMA8907	SUB LOADING MOTOR BRACKET	1	
27-3		VEM0395	SUB LOADING MOTOR U	1	
28		WJR3	CLAMPER	1	
50		XTV3+6F	SCREW	16	
51		XTV3+6FFZ	SCREW	1	
52		XTV26+6F	SCREW	2	
53		XTV26+4F	SCREW	2	
54		XYN2+C4	SCREW	2	
55		XTV26+5F	SCREW	2	
56		XTV3+8F	SCREW	3	
57		XSB3+6S	SCREW	2	
58		XYN3+C4S	SCREW	2	
59		XUC25FP	E-RING	7	
60		XUC2FP	E-RING	3	
61		XWGV3D6G	WASHER	12	
62		XWGV3F6G	WASHER	1	
63		XWGV3Y6G	WASHER	2	
64		XUC3FP	E-RING	4	
65		XWGV4D7G	WASHER	6	
66		XWG4PC	WASHER	1	
67		XWE4	WASHER	1	
68		XWGV4Y7G	WASHER	1	

MECHANICAL COMPONENT ASSEMBLY (4)

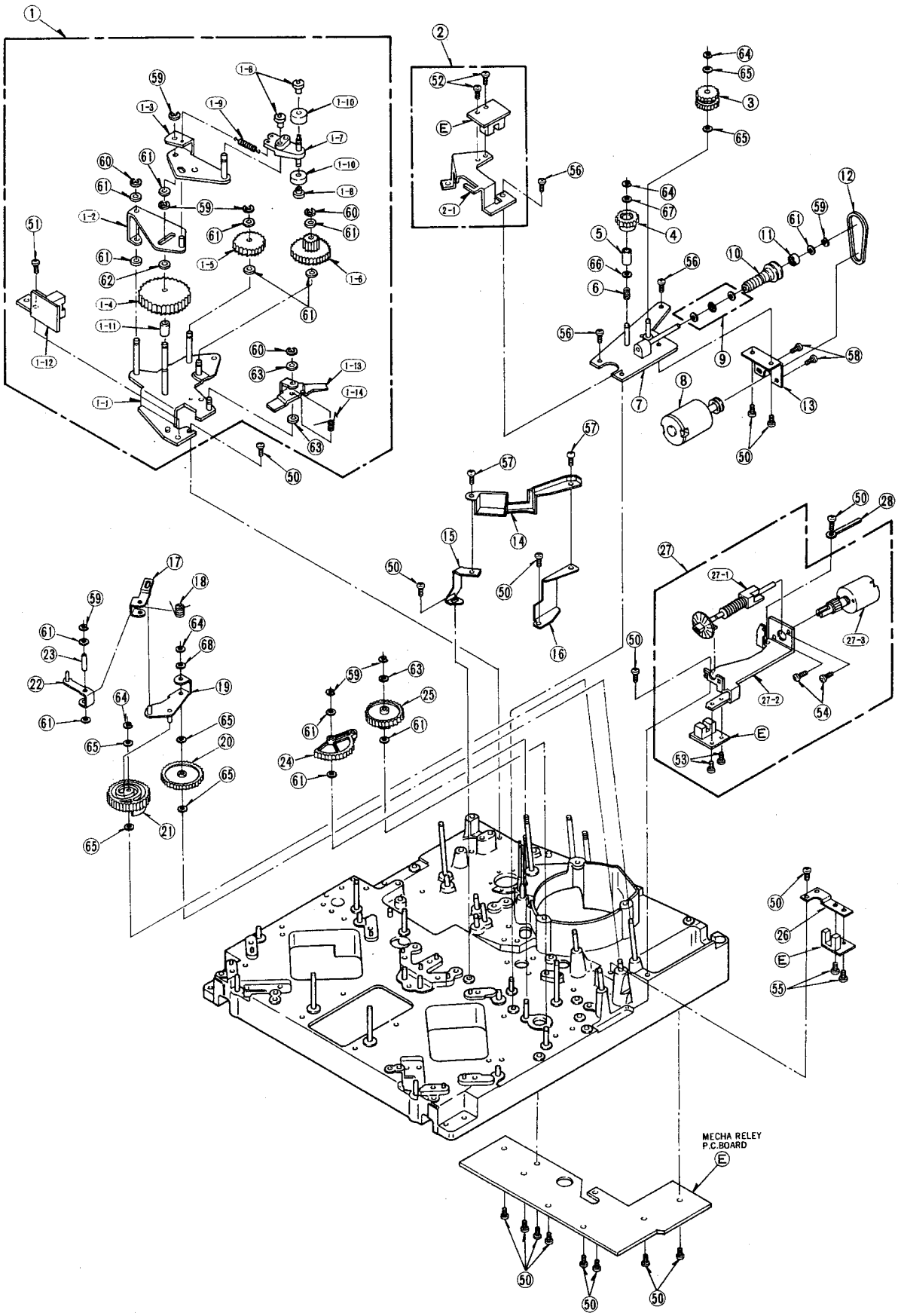

CASING PARTS ASSEMBLY

Ref.No.		Part No.	Part Name & Description	Pcs	Remarks
1		VYP3548	TOP PANEL U (1)	1	
1-1		VHD0775	SCREW	2	
1-2		VMX0835	SPACER	2	
2		VYP5313	TOP PANEL U (2)	1	
2-1		VHD0775	SCREW	2	
2-2		VMX0835	SPACER	2	
3		VGM0985	SIDE PANEL	2	
4		VJF1053	GARD EDGE SPACER	1	
5		VMP4083	TOP COVER ANGLE (A)	1	
6		VMP4082	TOP COVER ANGEL (B)	1	
7		VMP3962	P.C.B HOLDER	1	
8		VMP3957	RACK BRACKET	2	
9		VYH0145	HUNDLE	2	
9-1		VKH0215	HUNDLE ARM	2	
9-2		VJF0649	CLIP	2	
9-3		VMP2595	BASE ANGLE	2	
9-4		VMX1532	HUNDLE SPACER	2	
9-5		VMG0470	SPACER	2	
10		VGM0984	BOTTOM PLATE (1)	1	
11		VGM1006	BOTTOM PLATE (2)	1	
12		VMX1558	WASHER	4	
13		VMP3967	TOP PANEL ANGLE	2	
50		XSB4+8FC	SCREW	8	
51		XTV4+6F	SCREW	24	
52		XTV3+8F	SCREW	8	
53		XTV3+6F	SCREW	11	

CASING PARTS ASSEMBLY

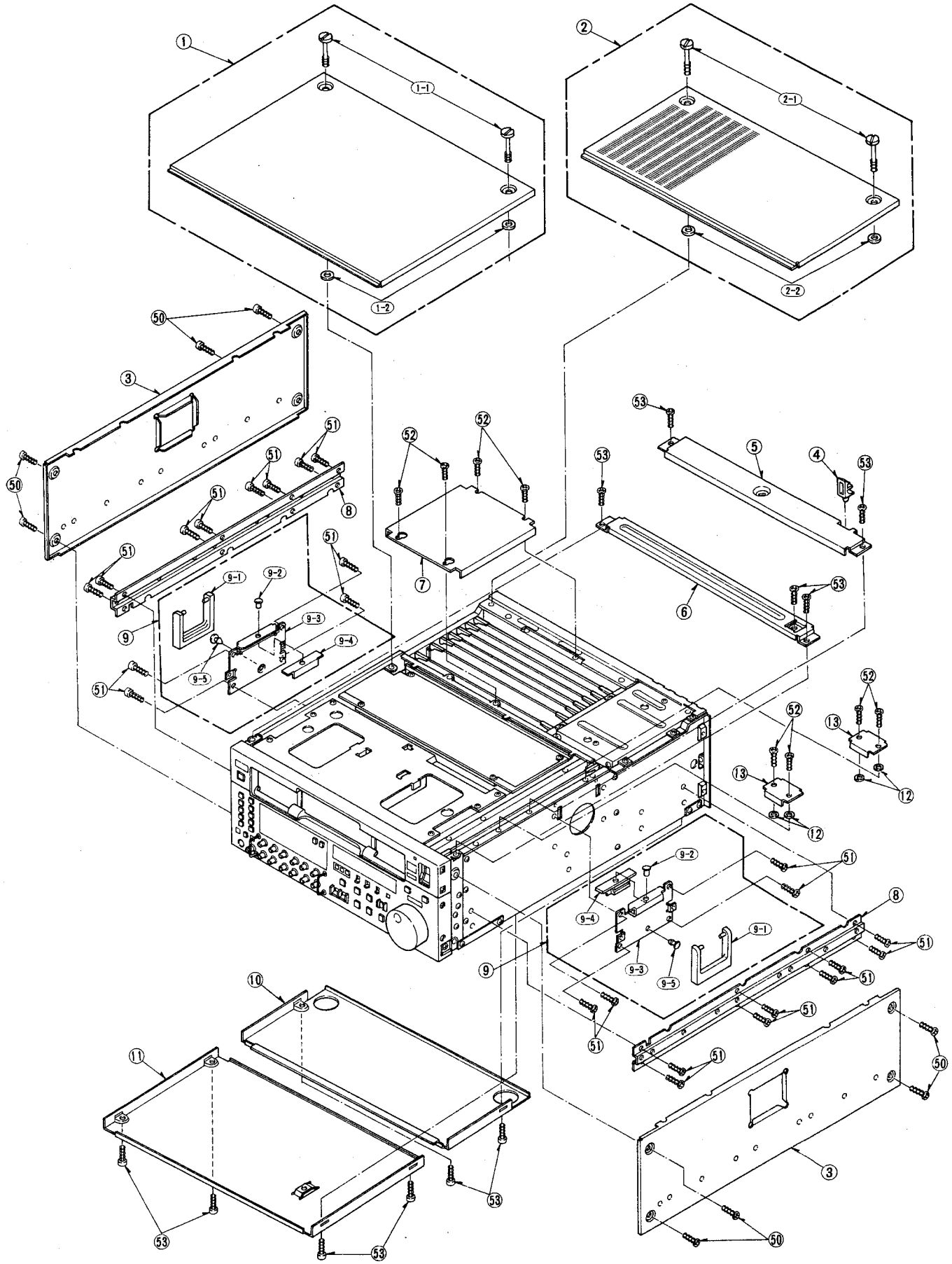

FRONT PANEL ASSEMBLY

Ref.No.		Part No.	Part Name & Description	Pcs	Remarks
1		VYP5224	FRONT PANEL U	1	
1-1		VMP4047	FRONT PANEL ANGLE	1	
1-2		VSW0047	POWER SW	1	
1-3		VMP4046	SW ANGLE	1	
2		VYP5225	FRONT PANEL U	1	
2-1		VYQ0834	ROTARY BRACKET (L)	1	
2-2		VMP3002	ANGLE	2	
2-3		VGU5334	HPVR KNOB	1	
2-4		VXU0768	VR KNOB U	6	
2-5		VXU1160	REC VR KNOB	6	
2-6		VGQ3176	PUSH BUTTON	4	
2-7		VGU5780	SEARCH DIAL	1	
2-8		VXU1087	SEARCH DIAL BUSHING	1	
2-9		VSR0095	SEARCH DIAL	1	
2-10		VYQ0833	ROTARY BRACKET (R)	1	
2-11		VGM1002	CONTROL PANEL	1	
2-12		VMB2597	BOTTON SPRING	4	
2-13		VGU3894	BUSHING BOTTON	4	
2-14		VGU5287	SLIDE KNOB	5	
2-15		VGF0498	SLIDE KNOB SHEET	5	
2-16		VMP4050	PRESSURE ANGLE A	1	
2-17		VMP4051	PRESSURE ANGLE B	1	
2-18		VGU3495	SLIDE SW	4	
2-19		VMZ2132	CPU BARRIER	1	
2-20		VKU0384	FRONT COVER	1	
2-21		VKF2023	CONTROL PANEL DOOR (SUB)	1	
2-22		VGQ3212	DOOR MAGNET	1	
2-23		VMX1968	WASHER	4	
2-24		VWJ28C2060LL	CABLE	2	
3		VHD0277	SCREW	3	
50		XTV3+8J	SCREW	18	
51		XTN3+6J	SCREW	1	
52		XSB3+10FCW	SCREW	8	
53		XTV4+12J	SCREW	3	
54		XYN3+C6S	SCREW	4	
55		XTV4+12J	SCREW	10	
56		XTN4+14G	SCREW	8	
57		XTB4+8J	SCREW	3	
58		XSN3+6	SCREW	2	
59		XTV4+12J	SCREW	4	
60		XSB3+8FZ	SCREW	1	
61		XNG3C5	NUT	4	
62		XWA3B	SPRING WASHER	4	
63		XWG3	WASHER	4	

FRONT PANEL ASSEMBLY

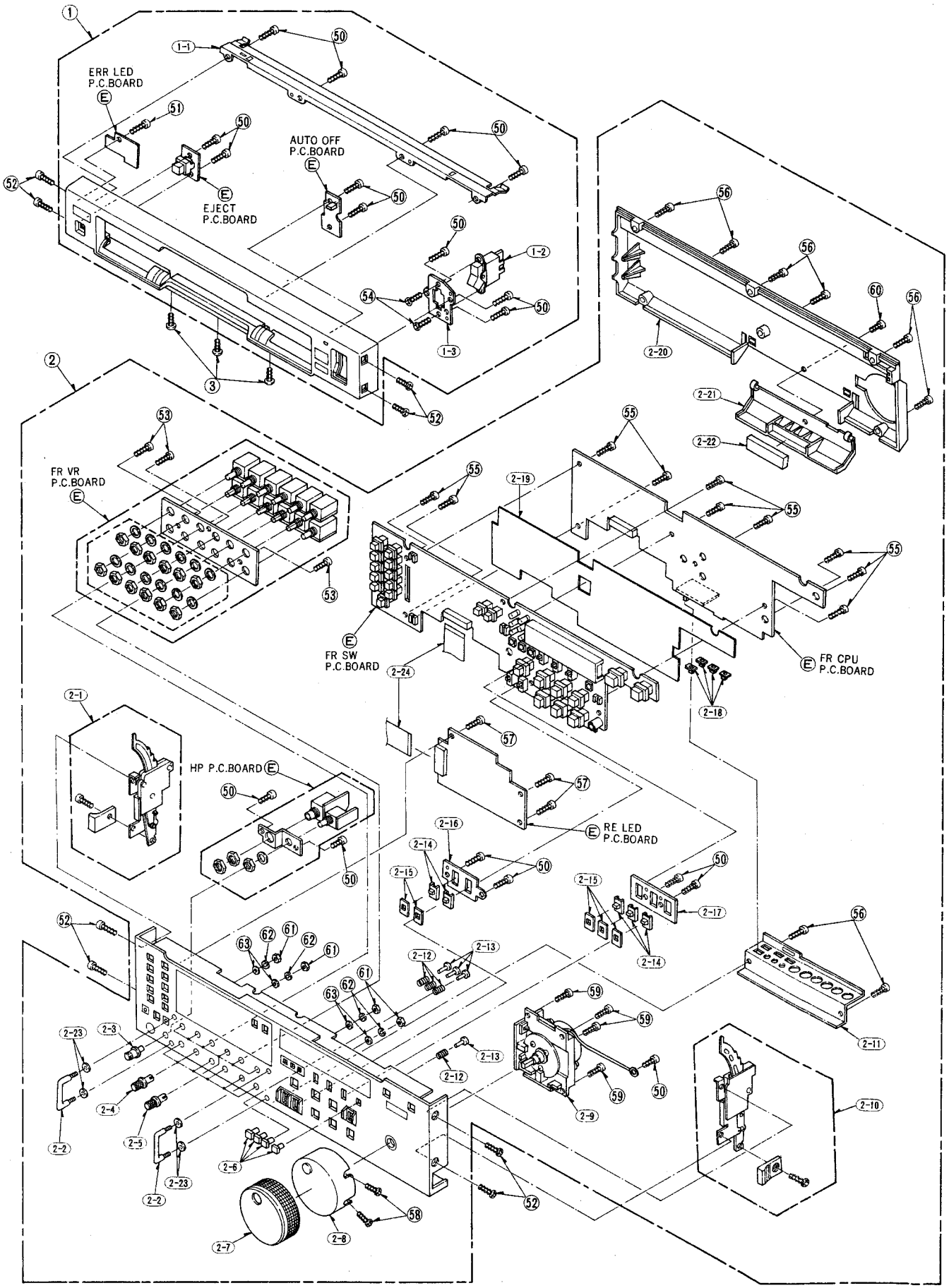

REAR JACK PANEL ASSEMBLY

Ref.No.		Part No.	Part Name & Description	Pcs	Remarks
1		VEJ1372	JACK PANEL U	1	
1-1		VJH0694	JACK PANEL	1	
1-2		VGH3194	JACK PANEL NAMEPLATE	1	
1-3		VJS3462	BNC	1	
1-4		VMP3980	FUSE BOX ANGLE	1	
1-5		VJF1005	FUSE HOLDER	1	
1-6		VMZ2139	HOLDER COVER	1	
1-7		VJF0215	BINDER	1	
1-8		VGH3230	FUSE BOX NAMEPLATE	1	
1-9		XBA1C63NB5	FUSE	1	
E-1		VJP3414A025	CONNECTOR	2	
E-2		VJP3414A015	CONNECTOR	1	
E-3		VJP3414A009	CONNECTOR	2	
E-4		VMP3968	CONNECTOR ANGLE	1	
E-5		VJS3459	BNC	9	
E-6		VJP3417	XLR CONNECTOR (MALE)	10	
E-7		VJS3417	XLR CONNECTOR (FEMALE)	8	
E-8		VJS3463	BNC	4	
2		VEK6296	POWER U	1	
2-1		VJF1062	EDGE GUARD (1)	1	
2-2		VJF0046	CLAMPER	1	
2-3		VGM0990	POWER OUTER BOX (L)	1	
2-4		VMZ1394	BARRIER	1	
2-5		VJF0938	HOLDER	1	
2-6		VMP3969	POWER BOX	1	
2-7		VMZ2101	BARRIER	1	
2-8		VRF0078	FAN MOTOR	1	
2-9		VMP3990	FAN MOTOR GUARD ANGLE	1	
2-10		VGF0388	FAN MOTOR GUARD	1	
2-11		VJH0082	GND TERMINAL	1	
2-12		VMP3971	P.C.BOARD ANGLE	1	
2-13		VMZ2098	FILTER BARRIER	1	
2-14		VJH0082	A/C INLET	1	
2-15		VMZ1252	A/C INLET COVER	1	
2-16		VMZ2151	P.C.BOARD ISOLATION	1	
2-17		VMZ2092	POWER BARRIER	1	
2-18		VHN0011	LOTCH	2	
2-19		VMP3978	P.C.BOARD ANGLE (UPPER)	1	
2-20		VMP3979	P.C.BOARD ANGLE (LOWER)	1	
2-21		VMZ2094	BARRIER	1	
2-22		VGM1003	POWER BOX (R)	1	
2-23		VJF1062	EDGE GUARD (2)	1	
2-24		VMZ0683	ANGLE	4	
2-25		VHD0277	SCREW	2	
50		XTN4+6FFZ	SCREW	8	
51		XTB3+6FFZ	SCREW	5	
52		XTN3+10JFZ	SCREW	9	
53		XSN26+6FC	SCREW	36	
54		XYE3+EF8	SCREW	2	
55		XTV3+6F	SCREW	19	
56		XYN3+F6S	SCREW	3	
57		XYE3+EF6	SCREW	10	
58		XTV4+6F	SCREW	1	
59		XSB3+6FZS	SCREW	2	
60		XSN26+4	SCREW	8	
61		XSN4+35FCS	SCREW	4	
62		XTB3+6FFZ	SCREW	2	

REAR JACK PANEL ASSEMBLY

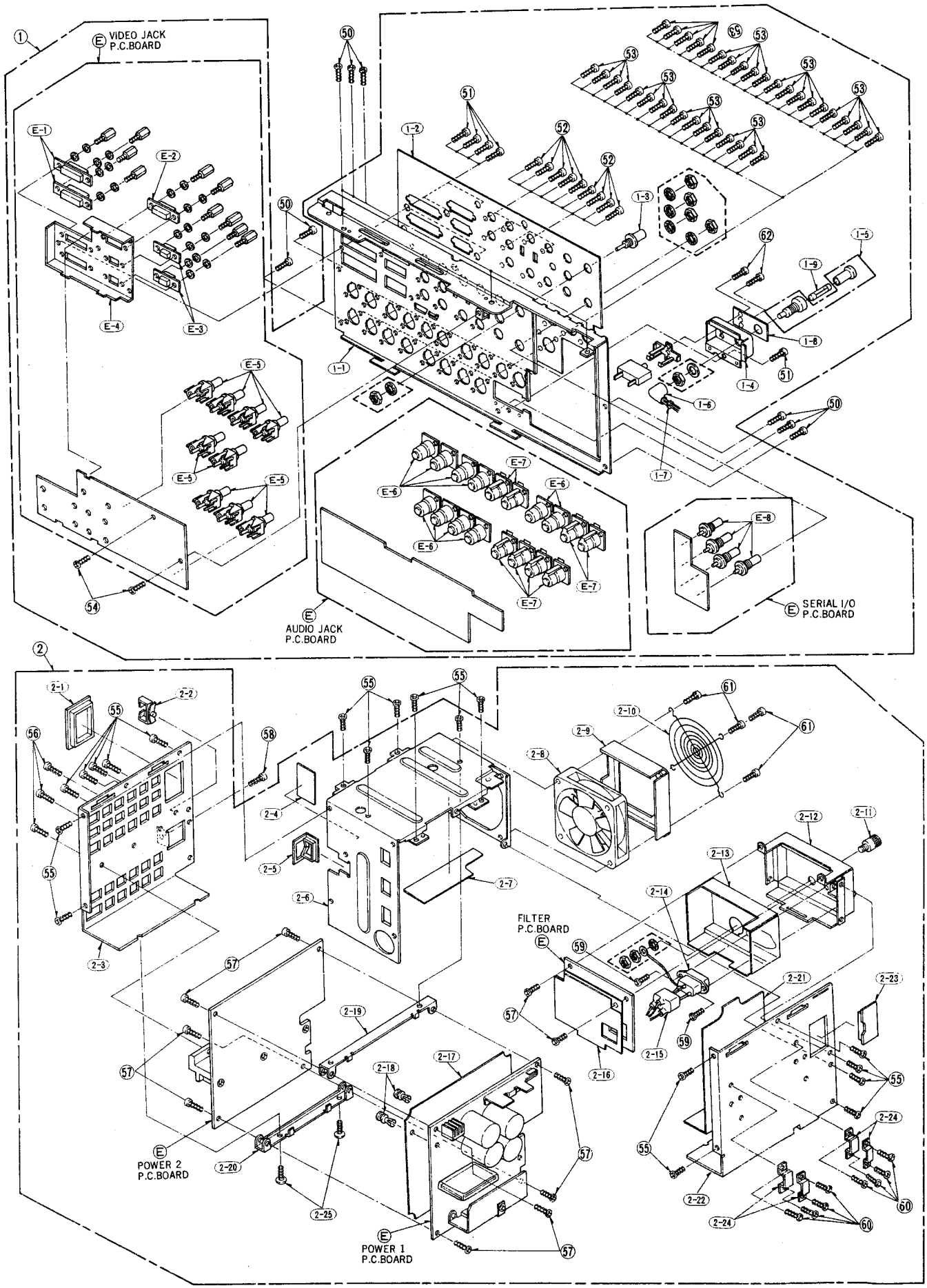

CASSETTE COMPPARTMENT ASSEMBLY

Ref.No.		Part No.	Part Name & Description	Pcs	Remarks
1		VXA5024	FRONT LOADING U	1	
2		VMD1746	OPENER	1	
3		VXA5021	RIGHT SIDE PLATE (1) U	1	
4		VDB1116	MAIN SHAFT RETAINER	1	
5		VML2544	UD PHOTO LEVER	1	
6		VMD1752	KICK GUIDE	1	
7		VMA8056	PHOTO ADJ PLATE	2	
8		VEK5482	PHOTO TR R U	1	
9		VMB2325	V PHOTO LEVER SPRING	1	
10		VML2543	V PHOTO LEVER	1	
11		VMA8902	TOP PLATE	1	
12		VXA5018	LEFT SIDE PLATE U	1	
12-1		VDB1116	MAIN SHAFT RETAINER	1	
12-2		VMD1752	KICK GUIDE	1	
12-3		VXA5019	LEFT SIDE PLATE (1) U	1	
12-4		VEK5483	PHOTO TR L U	1	
12-5		VML2548	PANEL OPENER	1	
13		VXA4431	WORM BASE U	1	
13-1		VXA4432	GEAR BASE (1) U	1	
13-2		VDG0803	WORM WHEEL	1	
13-3		VDG0804	INTERMEDIATE GEAR 2	1	
13-4		VXP1229	WORM GEAR U	1	
13-5		VEM0393	FRONT LOADING MOTOR U	1	
13-6		VMA8440	GEAR BASE	1	
14		VMB2326	UD PHOTO LEVER SPRING	1	
15		VMD1747	CENTER GUIDE	1	
16		VMS4652	RETECTION LEVER SHAFT	1	
17		VMB2323	DETECTION LEVER SPRING	2	
18		VWJ0559	FLEXIBLE CABLE	1	
19		VMD1749	CABLE HOLDER B	1	
20		VMZ1801	INSULATION SHEET	1	
21		VXA4699	CASSETTE HOLDER (A) U	1	
22		VMD1748	CASSETTE GUIDE	2	
23		VMS4629	PRESSURE ROLLER SHAFT	1	
24		VDP1389	PRESSURE ROLLER	6	
25		VML2148	PRESSURE LEVER A (R)	1	
26		VML2149	PRESSURE LEVER A (L)	1	
27		VMB2356	PRESSURE LEVER SPRING	2	
28		VMA8905	PRESSURE ROLLER SPRING	1	
29		VXL2103	KICK DRIVE LEVER R U	1	
30		VXL2104	KICK DRIVE LEVER L U	1	
31		VML2545	KICK LEVER R	1	
32		VML2546	KICK LEVER L	1	
33		VMA8435	DETECTION LEVER BASE	1	
34		VML2542	DETECTION LEVER	2	
35		VMB2324	KICK LEVER SPRING	2	
36		VMA8434	CASSETTE IN SW ANGLE	2	
37		VMA8442	FRONT GUIDE ANGLE	1	
38		VMD1754	ANGLE GUIDE	2	
39		VDP1020	GUIDE ROLLER A	2	
40		VDP1021	GUIDE ROLLER B	2	
41		VDP1388	GUIDE ROLLER D	4	
42		VML2498	WIPER ARM R	1	
43		VML2499	WIPER ARM L	1	
44		VDG0800	WIPER GEAR	2	
45		VMB2327	WIPER CHARGE SPRING	2	
46		VMD1753	CHARGE SPRING COVER	2	
47		VMS4628	MAIN SHAFT	1	
48		VMS2549	BRAKE ARM CAM PIN	1	
49		VDG0802	INTERMEDIATE GEAR 1	1	
50		VDG0801	MAIN SHAFT GEAR	2	
51		VDG0231	PANEL GEAR	1	
52		VMB2611	BLINDER PANEL SPRING	1	
53		VYF1813	BLINDER PANEL A U	1	
53-1		VMA8485	BLINDER PANEL (SUB)	1	
53-2		QBG1210	GUM	4	
54		VMD1750	CABLE HOLDER A	1	
55		VML2633	PROTECT LEVER	1	
56		VMS3986	LIFT LEVER PIN SHAFT	2	
57		VMB2448	PROTECT LEVER SPRING	1	
58		VMX1811	METER SPACER	2	
59		VMD1883	CABLE HOLDER C	1	
60		VJR3	CLAMPER	1	

Ref.No.		Part No.	Part Name & Description	Pcs	Remarks
80		XQN2+A3FZ	SCREW	4	
81		XSN26+6	SCREW	6	
82		XTN2+8J	SCREW	2	
83		XTN26+4F	SCREW	4	
84		XTV26+4F	SCREW	6	
85		XTV3+6F	SCREW	17	
86		XTV26+4FFZ	SCREW	4	
87		XTV3+8F	SCREW	2	
88		XYN26+C4	SCREW	4	
89		XYN26+F4	SCREW	2	
90		XYN3+C4S	SCREW	4	
91		XSN26+4	SCREW	3	
92		XYN3+F8S	SCREW	4	
93		XUC25FP	E-RING	8	
94		XUC3FP	E-RING	11	
95		XUC4FP	E-RING	1	
96		XUC5FP	E-RING	2	
97		XWGV4D7G	WASHER	1	
98		XWGV4Y9G	WASHER	2	
99		XWGV5D9G	WASHER	2	
100		XWE2	WASHER	4	
101		XWG4	WASHER	1	
102		XWGV4Y7G	WASHER	2	
103		XSN2+8	SCREW	4	
104		XWGV4D9G	WASHER	2	
105		XQN26+A6	SCREW	2	

CHASSIS FRAME ASSEMBLY

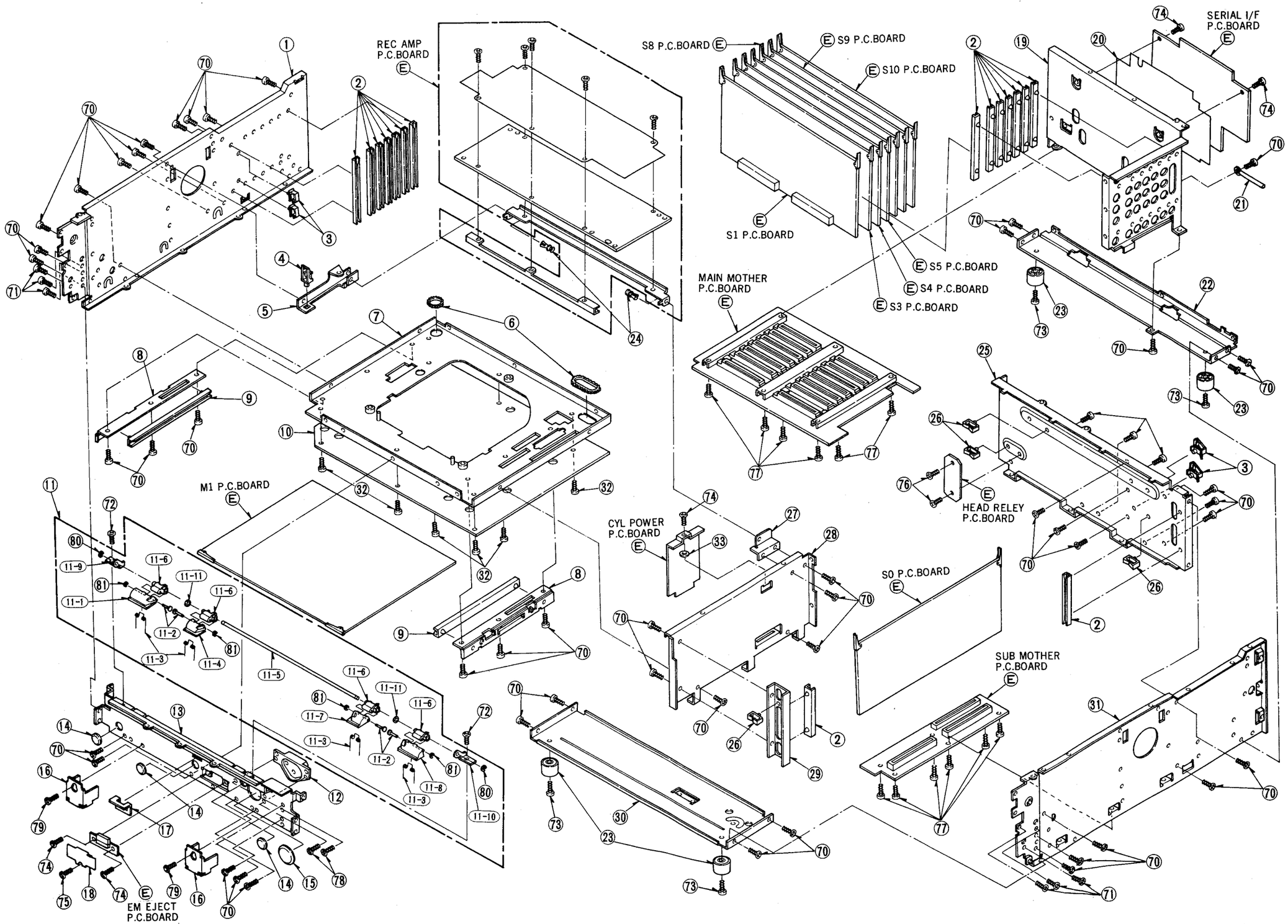

5—75

PACKING PARTS ASSEMBLY

Ref.No.	Part No.	Part Name & Description	Pcs	Remarks
1	VFK0882	S EXTENSION BOARD	1	
2	VFK0883	M EXTENSION BOARD	1	
3	VPN3701	TOP PAD	1	
4	VPN3573	CUSHION (TR)	1	
5	VPN3575	CUSHION (BR)	1	
6	VPN3572	CUSHION (TF)	1	
7	VPN3574	CUSHION (BF)	1	
8	VPG6776	PACKING CASE	1	
9	VJA0472	AC CORD	1	
10	VPG6116	ACCESSORY BOX PAD	1	
11	VPN3700	FRONT PAD	1	
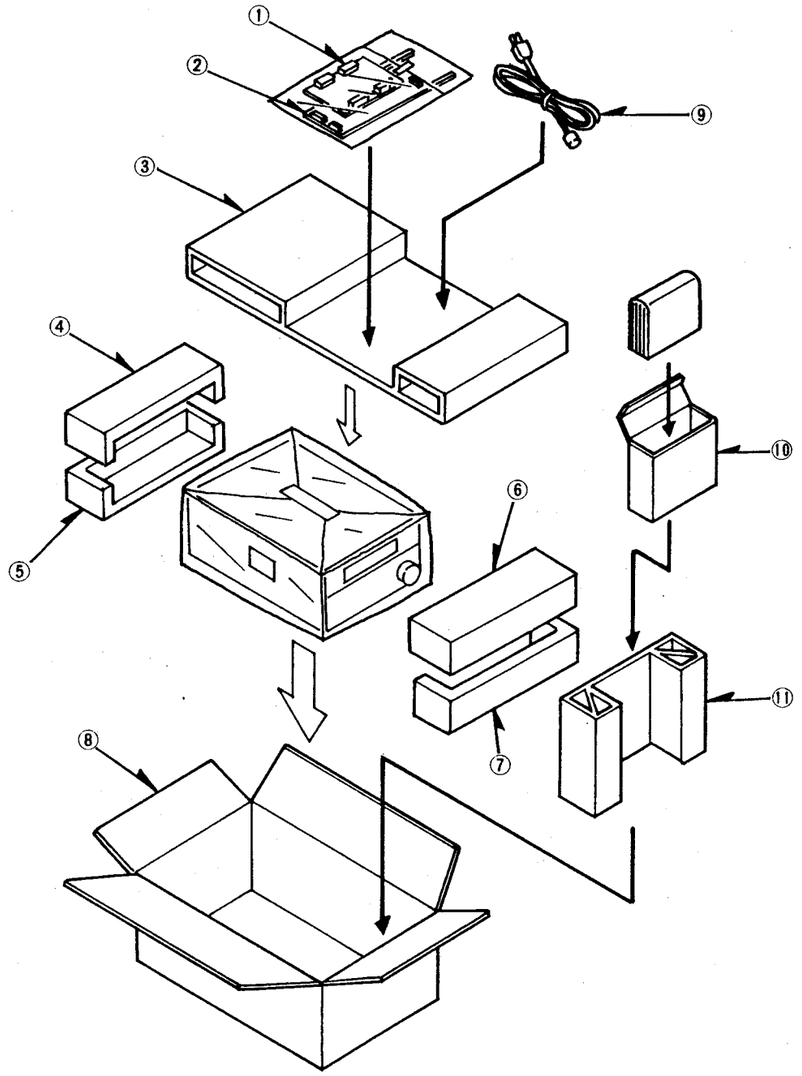
PACKING PARTS ASSEMBLY